RULES & REGULATIONS

Including
General Installation & Anchoring Specifications

Effective: August 27, 2013

ARKANSAS MANUFACTURED HOME COMMISSION

101 East Capitol Avenue - Suite 210
Little Rock, Arkansas 72201

Phone: (501) 324-9032 ***Fax: (501) 683-3538***

TABLE OF CONTENTS

CHAPTER I. ***AUTHORITY***.....3

CHAPTER II. ***DEFINITIONS***.....3

CHAPTER III. ***CERTIFICATION AND LICENSING*** 5

Section 300 - Certification and Licensing - General
Section 301 - Certification of Manufacturers
Section 302 - Certification of Retailers
Section 303 - Licensing of Installers
Section 304 - Licensing of Manufactured Home Salespeople
Section 305 - Sales or Auctions to the Public
Section 306 - Action Against Certification and License

CHAPTER IV. ***COMPLAINTS, INSPECTIONS AND DISPUTE RESOLUTION***.....13

Section 400 - Complaints Against Manufacturers, Retailers and Installers
Section 401 - Compliance With Subpart I of HUD Regulations
Section 402 - Notification And Correction Procedures Required Of Manufacturers and IPIAS
Section 403 - Compliance With Federal Construction and Safety Standards
Section 404 - Complaints and Inspections Under State Authority
Section 405 - Inspections and Fee Structure

CHAPTER V. ***MANUFACTURED HOUSING RECOVERY FUND***.....….....23

Section 500 - Assessments and Refunds
Section 501 - Claims, Eligibility and Administration of Fund

CHAPTER VI. ***INSTALLATION AND ANCHORING SPECIFICATIONS***.....27

Section 600 - Installation Standards For New Homes, Used Homes
Section 601 - Elements of Installation
Section 602 - State Installation Specifications
Section 603 - Anchoring

CHAPTER 1. AUTHORITY

Act 419 of 1977 created the Arkansas Manufactured Home Commission and set forth the powers and duties of the Commission, the Director and other personnel of the Agency to: administer the Federal Manufactured Home Construction and Safety Standards; promulgate and enforce state standards for manufactured home installation; require certification and/or licensing of manufacturers, retailers, installers and salespeople; and to promulgate and enforce rules and regulations governing the construction and installation of manufactured homes manufactured, sold or offered for sale in the state of Arkansas.

The following rules and regulations pertaining to the manufacture, sale and installation of manufactured homes are duly adopted and promulgated by the Arkansas Manufactured Home Commission pursuant to the authority expressly conferred by Act 419 of 1977 as amended.

Repealing Clause: All previous rules and regulations pertaining to the manufacture, sale, and installation of manufactured homes are hereby repealed.

CHAPTER 2. DEFINITIONS

The following terms are defined for the purpose of these regulations. No attempt is made to define ordinary words which are used in accordance with the established dictionary meaning except when the word has been loosely used and it is necessary to define its meaning as used in these regulations to avoid a misunderstanding.

Because the purpose is to define terms rather than words, the definitions are alphabetical using the first word of the term rather than by the noun.

A. *Agency*: The Director of the Arkansas Manufactured Home Commission or other personnel authorized to act on behalf of the Director.

B. *Anchoring*: A combination of external ties, cables, straps and ground anchors or alternative systems certified by an engineer used to secure the home to the ground to resist displacement and movement by natural forces.

C. *Auction:* Means the selling or offering for sale of manufactured homes to manufactured home retailers or to the public, by a person, firm or corporation not otherwise certified or licensed, in an auction or liquidation format or on consignment.

D. C*ertification*: Means the act of certifying or a state of being certified.

E. *Commission*: Means Arkansas Manufactured Home Commission.

F. *Defect*: means any defect in the performance, construction, components or material of a manufactured home that renders the manufactured home or any part thereof not fit for the ordinary use for which it was intended.

G. *Director*: Means the Director of the Arkansas Manufactured Home Commission.

H. *Federal Standards*: means the National Manufactured Housing Construction and Safety Standards Act of 1974 (42 U.S.C. § § 5401 et seq) and applicable regulations promulgated by the United States Department of Housing and Urban Development, as and when adopted by the Commission.

I. *HUD*: Means the U.S. Department of Housing and Urban Development.

J. *Installation:* means work done to stabilize, support or anchor a manufactured home or to join sections of a multi-section manufactured home when any such work is governed by regulations adopted by the Commission.

K. *Installer*: Means any person, firm or corporation not otherwise certified, engaged in the business of installing manufactured homes for himself or on behalf of any other person not certified under this Act.

L. *Manufacturer*: Means any person who manufactures manufactured homes.

M. *Multi-Section*: Means more than one unit of a manufactured home when joined together form a single entity, a livable home.

N. *Quality Control*: Means in-plant inspection by the manufacturer to assure that all units meet the National Manufactured Housing Construction and Safety Standards and the approved DAPIA Manual for each plant.

O. *Retailer*: Means any person, firm or corporation in the business of accepting on consignment, buying for resale, selling or exchanging manufactured homes or offering same to the public for sale, exchange or lease-purchase, whether for himself or on behalf of any other person not certified as a retailer under this Act.

P. *Revocation*: Means the repeal or reversal of the rights of the manufacturer or retailer to sell or distribute units in the State of Arkansas. Means the repeal or reversal of the rights of the installer to set-up or anchor manufactured homes.

Q. *Salesperson*: Means any person employed by the retailer or manufacturer who is engaged in either the wholesale or retail sale of manufactured homes.

R. *Separate Entity*: Means each individual location of a manufacturing plant or each individual retail location.

S. *Site*: Means actual location of the manufactured home upon a plot of ground.

T. *Standards*: Means the National Manufactured Housing Construction and Safety Standards.

U. *Statement of Compliance*: Means the manufacturer or retailer certified and the installer licensed by the Arkansas Manufactured Home Commission will comply with Act 419 of 1977 as amended, the Arkansas Manufactured Home Commission's rules and regulations, the National Manufactured Housing Construction and Safety Standards Act of 1974 and the DAPIA Manual approved by HUD.

V. *Suspension*: Means to cease or stop temporarily the right to manufacture, sell, or install manufactured homes within the State of Arkansas.

CHAPTER 3. CERTIFICATION AND LICENSING

Section 300. Certification and Licensing - General

A. Types of Certification and License

Any person, firm or corporation which acts in one or more of the following capacities shall be required to certify or license with the Arkansas Manufactured Home Commission:

1. *Manufacturer* - Each manufacturer, in or out of state, delivering or shipping manufactured homes into the State for sale,

2. *Retailer* - Any person, firm or corporation in the business of accepting on consignment, buying for resale, selling or exchanging manufactured homes or offering same to the public for sale, exchange or lease-purchase, whether for himself or on behalf of any other person not certified as a retailer.

3. *Installer* - Any person, firm or corporation not otherwise certified, installing and anchoring manufactured homes,

4. *Salesperson* - Any person engaged in the selling of manufactured homes (either as a manufacturer' representative or retailer salesperson) must apply for a license within 30 days of beginning to sell manufactured homes in the state of Arkansas.

B. Annual Certification or License Renewal Required

1. Each person, firm or corporation certified or licensed by the Commission shall apply for renewal of their certification or license annually and must meet all the criteria for original certification or license.

2. Certifications or licenses shall expire one (1) year from the date of

the original certification or license, and must be renewed annually.

3. The Director may authorize the renewal of a certification or license made after the renewal date upon payment of a late fee of $10.00 per calendar day of delinquency not to exceed forty five (45) days. After 45 days, the certification or license shall be suspended. Suspension of certification or license may be appealed in accordance with Section 306 (A) (4) of these regulations. Continuing to operate after the suspension of certification or license is in violation of this Act.

C. Separate Entity

For certification/licensing and compliance purposes, manufacturers, retailers and installers that occupy more than one location shall have each location treated as a separate entity and adhere to all requirements for certification or licensing.

D. Statement of Compliance

The Statement of Compliance shall be signed by the person or responsible officer having full authority to commit his firm to the conditions of compliance and shall not be transferable. Violation of the Statement of Compliance shall be considered grounds for suspension of the certification or license.

E. Failure to Obtain Certification or License

1. No person, firm or corporation shall act as a manufacturer, retailer or installer without having first secured the required certification or license from the Commission.

2. The Commission shall have the authority to collect fees and assessments from any person, firm or corporation found to be acting as a manufacturer, retailer or installer without having first secured the required certification or license from the Commission.

3. The Commission shall have the authority to impose a monetary penalty not to exceed one thousand dollars ($1,000.00) for each violation of any provision of Act 419 of 1977 as amended or the rules and regulations promulgated thereunder.

4. The Commission shall have the authority to file suit in Circuit Court to enjoin any person, firm or corporation acting as a manufacturer, retailer or installer without having first secured the required certification or license from the Commission

Section 301. Certification of Manufacturers

A. Requirements for Manufacturer Certification

1. Application shall be on forms supplied by the Agency.

2. Each application shall be accompanied by the following before certification is granted:

   (a) Statement of Compliance;

   (b) Fees set forth for certification,

   (c) The required deposit in the Manufactured Housing Recovery Fund; and

   (d) A copy of the Manufacturer's Homeowner and Installation manual(s).

3. Applicant shall be in good standing with the Commission and shall not have any unpaid civil penalties or outstanding obligations to the Commission.

B. Certification Fee and Recovery Fund Deposit

1. Original certification fee shall be $1,000.00.
   Annual renewal fee shall be $625.00.

2. An assessment fee of ten thousand dollars ($10,000) per plant location to be deposited in the Manufactured Housing Recovery Fund.

C. Violation

Any in-state or out of state person, firm or corporation that manufactures homes and offers them for sale or use in the State without being properly certified with the Commission; or any manufacturer selling or offering manufactured homes for sale to a person, firm or corporation not certified as a retailer as required under Section 300 shall be considered to be in violation of this Act.

SECTION 302. Certification of Retailers

A. Requirements for Certification of Retailers

1. Application forms shall be supplied by the Agency.

2. Each application shall be accompanied by the following before original certification is granted:

   (a) Statement of Compliance;

(b) Fees set forth for certification;

(c) The required deposit in the Manufactured Housing Recovery Fund;

(d) Proof of installation, anchoring and service capabilities, including compliance with installation testing and continuing education requirements set forth in Section 303 (A)(3) of these regulations or provision of a written contract with a licensed installer to perform installation and anchoring of manufactured homes;

(e) Salespersons' license applications with fees other than the owner(s) of the retail location; and

(f) A list of the principal owner(s) of the retail location on a form provided by the Agency.

3. Applicants for original retailer certification after January 1, 2012 or applicants for renewal certification after July 1, 2012, must maintain:

(a) A business office, separate and apart from any residence, connected to all applicable public utilities and in compliance with applicable local zoning requlations;

(b) A public restroom, connected to all applicable public utilities;

(c) A valid landline business telephone, with number listed under the name of the business;

(d) A state sales tax permit and master certification issued by Arkansas Department of Finance and Administration;

(e) Proof of at least $1 million in commercial general liability insurance issued in the name of the business; and,

(f) A permanent, all-weather business sign in view of public traffic bearing the name of the firm and identifying the firm with the housing industry. Sign letters shall be at least eight inches (8”) in height.

4. Applicant shall be in good standing with the Commission and shall not have any unpaid civil penalties or outstanding obligations to the Commission.

5. Any person applying for an initial certification with the Arkansas Manufactured Home Commission shall be subject to a criminal background check. If the criminal background check shows that the applicant has been convicted of a felony, the certification will not be granted without a hearing before the Commission and approval by the Commission.

6. An applicant for original or renewal certification may request a waiver of any of the requirements for certification set forth in this Section. The Commission may grant an applicant's request for a waiver of any of the requirements set forth in this section, other than a requirement mandated by statute, following a hearing before the Commission and approval of the waiver request by the Commission.

B. Certification Fee and Recovery Fund Deposit

1. Original certification fee shall be $1,000.00.
   Annual renewal fee shall be $250.00.

2. An assessment fee of five thousand dollars ($5,000.00) per location to be deposited in the Manufactured Housing Recovery Fund.

C. Sales or Auction to Retailers

1. Any person, firm or corporation engaged in the sale of manufactured homes to certified retailers in the State in an auction or liquidation format or on consignment, other than manufacturers, shall be not be required to become certified, and shall not be subject to the requirements for certification set forth in these regulations.

2. Any person, firm or corporation engaged in the sale of manufactured homes to certified retailers in the State in an auction or liquidation format or on consignment, shall submit to the Commission, immediately following such auction or sale, a report on forms provided by the Commission, including the following information:

   (a) A complete list of the homes sold, auctioned or consigned;

   (b) The manufacturer, model and size of each home;

   (c) The serial number and HUD label number of each home; and

   (d) The name and license number of the retailer purchasing the home.

D. *Violation*

Any person, firm or corporation acting as a retailer without being properly certified with the Commission; any retailer accepting a manufactured home, directly or indirectly, from a manufacturer not certified with the Commission; any retailer using an installer not licensed with the Commission; or any retailer failing to license a salesperson with the Commission within 30 days of hiring is in violation of this Act.

SECTION 303. Licensing of Installers

A. Requirements for Installer Licensing

1. Application forms shall be supplied by the Agency.

2. Each application shall be accompanied by the following before license is granted:

   (a) Statement of Compliance;

   (b) Fees set forth for licensing; and

   (c) The required deposit in the Manufactured Housing Recovery Fund.

3. Testing and Continuing Education

   (a) Applicants for initial license shall complete a training and education course presented or approved by the Commission and pass an examination presented or approved by the Commission based on knowledge of laws, rules and regulations, and basic skills pertaining to the installation of manufactured homes. No applicant who has failed to complete such training and pass such examination shall be eligible to receive an initial license. Applicants for initial licensure who fail the examination must wait thirty (30) days before requesting to re-take the exam.

      (i) An initial installer's license shall be provisional in nature and shall become a full installer's license only after Agency personnel have inspected a minimum of three (3) manufactured home installations completed by the installer for potential violations of the manufacturer's installation standards or these regulations and found the installer's work to be in substantial compliance with applicable standards or regulations.

      (ii) It is the responsibility of an installer who holds a provisional license to notify the Commission of each installation performed within three (3) business days of completion of the installation.

      (iii) If inspections of installations done by an installer who holds a provisional license reveal violations of the manufacturer's installation standards or these regulations, the installer's license may be suspended or revoked by the Commission, in accordance with Section 306 of these rules.

   (b) Applicants for license renewal must successfully complete a continuing education course presented or approved by the Commission once every thirty-six (36) months to be eligible for license renewal.

4. Applicant shall be in good standing with the Commission and shall not have any unpaid civil penalties or outstanding obligations to the Commission.

B. License Fees and Expiration

1. Original license and annual renewal fees shall be $250.00.

2. An assessment fee of two thousand five hundred dollars ($2,500.00) to be deposited in the Manufactured Housing Recovery Fund.

C. Violation

Any in state or out of state person, firm or corporation that installs manufactured homes for use in the State without being properly certified with the Commission; or any retailer or installer who does not install manufactured homes according to the regulations is in violation of this Act.

SECTION 304. Licensing of Manufactured Home Salespeople

A. Requirements for Salesperson's License

1. Application forms shall be supplied by the Agency.

2. Each application shall be accompanied by the following before the license is granted:

   (a) Fees set forth for licensing.

3. The Commission may require an examination of applicants for manufactured home salespeople based on knowledge of laws, rules and regulations pertaining to manufactured homes.

4. Applicant shall be in good standing with the Commission and shall not have any unpaid civil penalties or outstanding obligations to the Commission.

5. Any person applying for an initial retail salesperson's license with the Arkansas Manufactured Home Commission shall be subject to a criminal background check. If the criminal background check shows that the applicant has been convicted of a felony, the certification will not be granted without a hearing before the Commission and approval by the Commission.

B. License Fee

1. Original license and annual renewal fees shall be $50.00, payable by the manufacturer or retailer. Licenses shall remain the property of the manufacturer

or retailer, and shall not be able to be transferred to individuals other than the original licensee.

C. Violation

Any in state or out of state person engaged in selling manufactured homes in the State without being properly licensed with the Commission, shall be considered to be in violation of this Act.

Section 305. Sales or Auctions to the Public

A. Sales or Auctions to the Public

1. Any person, firm or corporation engaged in the auction of five (5) or more manufactured homes to the public shall be considered a retailer, and shall be subject to the requirements for certification of retailers set forth in Section 302 of these regulations.

2. Any person, firm or corporation engaged in the auction of five (5) or more manufactured homes to the public shall submit to the Commission, at least thirty (30) days prior to any auction, a notice including the date, time and physical address or location of any proposed auction. If such auctions are intended to recur on a scheduled basis, the Commission shall be provided with a schedule of proposed auctions or consignment sales.

3. Any person, firm or corporation engaged in the auction of five (5) or more manufactured homes to the public shall submit to the Commission, immediately following such auction, a report on forms provided by the Commission, including the following information:

4.

(a) A complete list of the homes sold or auctioned;

(b) The manufacturer, model and size of each home;

(c) The serial number and HUD label number of each home;

(d) The name, address and phone number of the consumer purchasing each home, and

(e) A written contract with a licensed installer to perform installation and anchoring of manufactured homes sold at auction to the public according to the Arkansas Manufactured Home Commission's installation specifications, as set forth in these regulations.

B. Violation

Any person, firm or corporation auctioning homes to the public without being properly certified with the Commission is in violation of this Act.

SECTION 306. Action Against Certification or License

A. Suspension, Revocation of License And Other Penalties

1. The Commission shall have the power to suspend, revoke or refuse to renew the certification or a manufacturer or retailer or the license of an installer or salesperson who is found to have been guilty of:

   (a) Fraud, misrepresentation or deception in obtaining a license;

   (b) Failure to comply with any valid directive of the Director or rules and regulations of the Arkansas Manufactured Home Commission; and

   (c) Violating any provision of Act 419 of 1977 as amended or the rules and regulations promulgated thereunder.

2. In lieu of suspension, revocation, or refusal to renew a license or certification, the Commission shall have the authority to impose a monetary penalty not to exceed one thousand dollars ($1,000) for each violation and may suspend, refuse to renew, or revoke the license or certification until the penalty is paid to the Commission. Such a penalty shall be imposed only if the Commission formally finds that the public welfare would not be impaired by the imposition of a monetary penalty rather than suspension, refusal to renew, or revocation and that payment of same should achieve the desired disciplinary purpose.

   (a) The Commission shall not impose a civil penalty upon any person, firm or corporation whose certification or license is suspended, revoked or not renewed under this section.

3. Any individual who knowingly and willfully violates the provisions of the Act in a manner which threatens the health or safety of any purchaser shall be deemed guilty of a misdemeanor and upon conviction therefore fined not more than one thousand dollars ($1,000.00) or imprisoned for not more than one (1) year or both for each violation.

4. Suspension Appeal

   (a) Any suspension may be appealed to the Manufactured Home Commission by a written request within ten (10) days. Suspension shall remain in effect until a speedy hearing by the Commission or Compliance Sub-Committee of the Commission. The Chairman of the Commission may waive the suspension after review of the facts pending the hearing.

After the revocation hearing, the Commission may revoke the certification or license.

(b) A manufacturer, retailer, installer or salesperson may be represented by legal Counsel and present any evidence and/or witnesses in his behalf against any charges.

(c) The Commission shall not revoke any manufacturer or retailer‘s certification, or installer or salesperson's license without a hearing.

CHAPTER IV. COMPLAINTS, INSPECTIONS AND DISPUTE RESOLUTION

The Arkansas Manufactured Home Commission, in its capacity as a state administrative agency (SAA) under the Federal standards enforcement program and under authority granted by Arkansas law, may investigate, make determinations relating to, and require correction of noncompliances, defects, serious defects and imminent safety hazards occurring in manufactured homes manufactured or installed in the state of Arkansas.

Implementation of the Commission’s inspection programs, complaint resolution programs and dispute resolution programs shall be in accordance with these regulations and applicable laws and regulations governing manufactured homes.

Section 400. Complaints Against Manufacturers, Retailers or Installers

A. Standard Forms Required; Information Requested

All complaints against manufacturers, retailers or installers shall be submitted to the Commission on forms supplied by the Agency. Information requested on the complaint form shall include, but not be limited to:

1. Name and complete mailing address of manufactured home owner;
2. Physical address of home, if different from mailing address;
3. Telephone number(s) of home owner;
4. Date of purchase or installation;
5. Year of manufacture and size of home;
6. Name and location of manufacturer;
7. Name and location of retailer;
8. Name and location or installer, if applicable; and
9. Specific items of complaint.

Section 401. Compliance With Subpart I of HUD Regulations

A. All complaints concerning units constructed in compliance with the National Manufactured Housing Construction and Safety Standards Act of 1974 shall be handled in compliance with Subpart I of the regulation established pursuant to the Act and state regulations.

1. Upon receipt of a consumer complaint or other information indicating the possible existence of a noncompliance, defect, serious defect, or imminent safety hazard, the Arkansas Manufactured Home Commission will review the complaint or information and forward the complaint or other information to the manufacturer of the manufactured home in question. When it appears from the complaint or other information that more than one manufactured home may be involved, the complaint will simultaneously be forwarded to HUD and to the SAA of the State where the manufactured home was manufactured.

2. When the complaint is forwarded to the manufacturer, the manufacturer will be requested, in writing, to investigate the complaint within twenty (20) days after receipt of the information and carry out any necessary investigations and inspections to determine whether the manufacturer is responsible.

3. Where the manufacturer has determined and reports that no imminent safety hazard, serious defect, defect or noncompliance exists and the Arkansas Manufactured Home Commission is able to concur from all available information, the Commission will consider the complaint closed and so inform the manufacturer and complainants; however, if the Commission is unable to concur with the manufacturer's report, a SAA investigation will be made and a copy of the investigation will be sent to the manufacturer and complainants. If it is found that the manufacturer's report was correct, the Commission will consider the matter closed.

4. Where, upon investigation, the Commission determines that an imminent safety hazard, serious defect, defect or noncompliance may exist, it will notify the manufacturer and request the manufacturer to take necessary action. Where the manufacturer does not take action after notification by the Arkansas Manufactured Home Commission and it appears that an imminent safety hazard or serious defect may exist, the Commission will inform the manufacturer of its opinion and simultaneously forward to HUD documentation of the factual basis upon which an opinion was made, for administrative determination by HUD, pursuant to 24 C.F.R., Section 3282.407 (a). Where the manufacturer does not take action after notification by the Arkansas Manufactured Home Commission and it appears that a defect or noncompliance may exist, the Commission will so notify the manufacturer. The notice shall be sent to the manufacturer by certified mail and will include:

(a) The preliminary determination by the Arkansas Manufactured Home Commission;

(b) The factorial basis for the determination;

(c) The identifying criteria of the manufactured homes known to be affected;

(d) Notice to the manufacturer that a hearing or presentation of views may be requested pursuant to 24 C.F.R. Part 3282, Subpart D, to establish that there is no such defect or noncompliance;

(e) Notice to the manufacturer that the preliminary determination shall become final unless the manufacturer responds within fifteen (15) days after receipt of such notice and requests a hearing or presentation of views; and

(f) Notice to the manufacturer that any information upon which the determination has been based, such as test results, records of inspection, etc., shall be available for inspection by the manufacturer.

5. Where the manufacturer requests a hearing or presentation of views, one shall be held pursuant to 24 C.F.R. Section 3282.152.

6. Where the manufacturer fails to respond to the notice of preliminary determination or if the Arkansas Manufactured Home Commission decides that the views and evidence presented by the manufacturer or others are insufficient to rebut the preliminary determination, the Commission may make a final determination that a defect or noncompliance exists and will notify the manufacturer to make a notification and submit a plan in accordance with 24 C.F.R. Section 3282.409. Within ten (10) days after receipt of the notice of final determination, the manufacturer may appeal to the Secretary of the United States Department of Housing and Urban Development.

7. The manufacturer's plan for notification and correction, including contents of notice, time for implementation and completion of actions and reports, shall be made in accordance with the provisions of 24 C.F.R. Section 3282.409 through 3282.413. When the manufactured home is in the hands of a distributor or retailer, it shall be handled in accordance with 24 C.F.R. Section 3282.414.

SECTION 402. Notification and Correction Procedures Required of Manufacturers and IPIAS.

A. Manufacturer's Determination.

When a consumer complaint is referred to the manufacturer and the manufacturer determines that an imminent safety hazard, serious defect, defect or noncompliance may exist and the manufacturer does not correct the imminent safety hazard or failure to conform within thirty (30) days of the date on which the manufacturer determined the existence of an imminent safety hazard or failure to conform, the manufacturer shall

prepare and submit a plan as provided for in 24 C.F.R. Section 3282.409, to the Arkansas Manufactured Home Commission.

B. Notification.

The plan, including a copy of the Notice as required by 24 C.F.R. Section 3282.410, shall be submitted to the Arkansas Manufactured Home Commission by the manufacturer and shall provide for notification by mail, to the first purchaser of each manufactured home containing an imminent safety hazard, serious defect, defect or noncompliance and any subsequent purchaser to whom any warranty provided by the manufacturer or required by Federal, State or Local Law has been transferred, to the extent feasible; by mail to any other person who is a registered owner of each manufactured home containing an imminent safety hazard, serious defect, defect or noncompliance and whose name has been ascertained pursuant to 24 C.F.R. Section 3 282.211.

C. Review.

1. The Arkansas Manufactured Home Commission will review the plan submitted by the manufacturer, including the contents of the notice and either approve the plan as submitted or make modifications to the plan for compliance with the requirements of 24 C.F.R. Section 3282.409 and notify the manufacturer of the approval or modification. The manufacturer may contest the modification within five (5) days of the approval of the plan of modification.

2. If the Arkansas Manufactured Home Commission does not accept the manufacturer's position as to the modification, it shall act as follows:

   (a) If the manufacturer contends that the manufactured home contains a defect rather than an imminent safety hazard or serious defect as the Arkansas Manufactured Home Commission contends, the Arkansas Manufactured Home Commission shall refer the matter to the Secretary /for determination under 24 C.F.R. 3282.407(a).

3. The formal notification requirements which would result from any determination by the manufacturer under 24 C.F.R. Section 3282.404 may be waived by the Commission that would otherwise review the plan upon receipt of satisfactory assurances from the manufacturer that:

   (a) The manufacturer has identified the class of possibly affected manufactured homes in accordance with 24 C.F.R. Section 3282.409;

   (b) The manufacturer will correct at the manufacturer's expense, all affected manufactured homes; and

   (c) The repairs, in the Commission's judgment, are adequate to remove the imminent safety hazard or failure to conform.

Section 403. Compliance With Federal Construction and Safety Standards Program

A. All manufactured homes manufactured in the State, sold, or offered for sale in this state, shall be in strict compliance with the Standards.

1. A HUD Certification label will be affixed to the home as required.

2. The retailer shall inspect every new manufactured home unit prior to selling to determine that all appliances, fixtures and systems are not damaged and are in place and operable.

3. Whenever a retailer finds a nonconformance or an imminent safety hazard in a manufactured home, the retailer shall contact the manufacturer, provide full information concerning the problem, and request appropriate action by the manufacturer. No retailer may sell a new manufactured known by the retailer not to be in conformance with the Standards.

4. If a retailer alters a manufactured home in such a way as to create an imminent safety hazard or to create a condition which causes a failure to conform with applicable Federal Standards, the manufactured home may not be sold, leased or offered for sale. Retailers shall maintain complete records of all alterations or corrections of failures to conform or imminent safety hazards made to homes.

B. The manufacturer's quality assurance program shall be set forth by the plant's Design Approval Primary Inspection Agency (DAPIA) and its quality assurance manual, and will be monitored by the plant's Production Inspection Primary Inspection Agency (IPIA).

C. All plans, specifications and engineering data shall be approved by a qualified Design Approval Primary Inspection Agency (DAPIA) which has been approved by HUD.

Section 404. Complaints and Inspections Under State Authority

A. Consumer Complaints

This section establishes procedures for the investigation and timely resolution of construction or installation defects in manufactured homes that are reported to the Commission during the one-year period beginning on the date of installation of the home, including:

1. Violations of the National Manufactured Home Construction and Safety Standards Act of 1974, 42 U.S.C. 5401-5425 or regulations promulgated by the United States Department of Housing and Urban Development; and

2. Violations of the rules and regulations governing the installation of manufactured homes promulgated by the Commission.

B. Dispute Resolution

This section establishes procedures for the investigation and timely resolution of disputes among manufacturers, retailers and installers of manufactured homes regarding responsibility for the correction or repair of construction or installation defects in manufactured homes that are reported to the Commission during the one-year period beginning on the date of installation of the home.

C. Receipt of Complaint; Notice Required

Upon receipt of a consumer complaint or other information indicating the possible violation of any provision of the Code or the rules and regulations promulgated thereunder, the Agency shall review the complaint or information and forward the complaint or other information to the manufacturer, retailer and installer of the manufactured home in question.

D. Corrective Action and Dispute Resolution

When the complaint is forwarded, the manufacturer, retailer and installer will be requested, in writing, to investigate the complaint within twenty (20) days after receipt of the information and to carry out any necessary investigations and inspections to determine the origin of the complaint.

1. When, upon investigation or inspection, the manufacturer, retailer or installer finds a violation of the Code or the rules and regulations promulgated thereunder, then the party responsible for the violation shall take the appropriate corrective action and notify the Agency of any actions taken to bring the home into compliance with the Code or the regulations.

2. When there is a dispute among the manufacturer, retailer and installer as to which party is responsible for the violation, then the Agency shall schedule an inspection of the home in order to determine the nature of the violation and assign responsibility for corrective action. The Agency shall provide notice of such an inspection, including information about the home in question and the date and approximate time of the inspection, in writing, to the manufacturer, retailer and installer.

E. Inspection by Commission; Notice Required

When the manufacturer, retailer or installer reports that corrective action has been taken to bring the home into compliance with the Code or the regulations, the Commission will consider the complaint closed and so inform the manufacturer, retailer or installer and the complainants; however, when items included on the original complaint remain unresolved, the Commission may schedule an inspection of the home in order to determine the nature of the violation, if any, and assign responsibility for corrective action. The Commission

shall provide notice of such an inspection, including information about the home in question and the date and approximate time of the inspection, in writing, to the manufacturer, retailer and installer.

F. Determinations by Commission; Time Frame for Corrective Action

A copy of the Agency's inspection report, including determinations of unresolved items and responsibility for corrective action will be sent to the manufacturer, retailer, installer and the complainants. In the report, the Director may order the manufacturer, retailer or installer to correct the violation within a reasonable time, not to exceed ninety (90) days. Should the Director determine that the violation poses a serious threat to the health and safety of the purchaser of the home, the Director may order the manufacturer, retailer or installer to correct the violation within five (5) working days.

A manufacturer, retailer or installer may request additional time to correct the violation. The request must be made in writing, and may be granted by the Director only when the extension will not pose a serious threat to the health and safety of the purchaser of the home.

G. Appeal of Agency's Determination

Should a manufacturer, retailer or installer dispute any determination made by the Director or Agency staff, the manufacturer, retailer or installer may appeal that determination to the Manufactured Home Commission. Such an appeal must be received by the Agency in writing, postmarked not more than ten (10) days following receipt of a determination issued by the Director. The determination will be held in effect until a timely hearing by the Commission or a Sub-Committee of the Commission. The Chairman of the Commission may stay the determination after review of the facts pending the hearing.

H. Closing of Complaints

1. When the manufacturer, retailer or installer reports that corrective action ordered by the Director has been taken to bring the home into compliance with the Code or the regulations, the Commission will consider the complaint closed and so inform the manufacturer, retailer or installer and the complainants.

2. When the manufacturer, retailer or installer reports that the purchaser refuses to allow corrective action as ordered by the Director to bring the home into compliance with the Code or the regulations, the Commission will consider the complaint closed and so inform the manufacturer, retailer or installer and the complainants.

I. Administrative Action by Commission; Notice of Hearing Required; Penalties

1. When items included in the Agency's inspection report remain unresolved, the Commission may schedule a hearing to consider administrative action

against the manufacturer, retailer or installer. The Commission shall provide notice of such a hearing, including information about the home in question and the date and approximate time of the hearing, in writing, to the manufacturer, retailer and installer.

2. The Commission shall have the power to suspend, revoke, or refuse to renew the license or certification under this chapter of any person who is found to have been guilty of violating any provision of the Code or the rules or regulations promulgated thereunder.

3. In lieu of suspension, revocation, or refusal to renew a license or certification, the Commission shall have the authority to impose a monetary penalty not to exceed one thousand dollars ($1,000) for each violation and may suspend, refuse to renew, or revoke the license or certification until the penalty is paid to the commission. Such a penalty shall be imposed only if the Commission formally finds that the public welfare would not be impaired by the imposition of a monetary penalty rather than suspension, refusal to renew, or revocation and that payment of same should achieve the desired disciplinary purpose.

4. Each violation of the Code or any regulation or order issued pursuant to it shall constitute a separate violation with respect to each manufactured home or with respect to each failure or refusal to allow or perform an act required thereby.

J. Appeal of Commission Decision or Penalty

Should a manufacturer, retailer or installer dispute any decision made or penalty imposed by the Commission, the licensee may appeal that decision to the Circuit Court in accordance with the Arkansas Administrative Procedure Act. Such an appeal shall stay that portion of the Commission order which directs corrective action or the payment of any penalty. The licensee shall not be required to act on the decision until such time as a final order of the Circuit Court, Court of Appeals or Supreme Court is issued.

Section 405. Inspections and Fee Structure

The Director of the Arkansas Manufactured Home Commission, with the approval of the Commission, shall establish inspection and monitoring fees, and provide for participation in the fee distribution system.

A. State Label Fee

Beginning October 1, 2007, there shall be a fee of $50.00 per home for each new manufactured home shipped into the State of Arkansas. This fee shall be paid to the Commission by the home manufacturer. Manufacturers shall also file a report of all manufactured homes shipped into the state per month. This report shall be filed on a

form provided by or approved by the Commission. Shipment reports and payment of required fees shall be made no later than the 15th day of the month following the reporting period. It shall be a violation of these regulations for a manufacturer to fail to comply with the provisions of this paragraph.

B. Installation Permit Fee and Random Sample Compliance Assurance Inspections

Beginning October 1, 2007, licensed installers and installing retailers shall be required to affix an installation permit decal to each new manufactured home installed in the State. Permit decals shall be purchased from the Commission and affixed to the home at the point where electrical power is connected to the home. Permit decals shall be affixed to the home within ten (10) days of delivery to the site.

There shall be a fee of $10.00 per each installation permit decal. This fee shall be paid to the Commission by the home installer. Installers and installing retailers shall also file a report of all new homes installed in the state per month. This report shall be filed on a form provided by or approved by the Commission. Installation reports and shall be made no later than the 15th day of the month following the reporting period. It shall be a violation of these regulations for an installer or installing retailer to fail to comply with the provisions of this paragraph.

The Commission shall approve a procedure for the timely inspection and certification of a percentage of the initial installations of new manufactured homes installed in the state on a random-sample basis to assure compliance with installation standards adopted by the Commission. The percentage of homes inspected shall be set by the Commission, and shall be determined based on requirements of the Federal Standards program, as and when adopted by the Commission. The procedure shall place priority on inspecting homes installed in all regions of the state by all participating installers and installing retailers on a fair and equitable basis.

Compliance assurance inspections may be scheduled without notice. Defects found in compliance assurance inspections may be processed in accordance with these regulations, beginning with Section 404 (F). Determinations made by an authorized representative of the Commission may be appealed in accordance with Section 404 (G).

C. Initial 100% Inspection Fees/Certification

There shall be a fee of $30.00 per hour for conducting initial 100% inspections at manufacturer locations when the Commission acts as a Production Inspection Primary Inspection Agency for the purpose of certifying the manufacturer as required under Title VI of the Housing and Community Development Act of 1974. This fee shall be paid to the Commission by the manufactured housing manufacturer for whom the inspection is conducted. The manufacturer shall also be charged for reimbursement of mileage and per diem incurred by Commission personnel to and from the location of the manufacturer.

The above procedures will be followed in the event it becomes necessary to withhold HUD labels from the manufacturer because of continued failures to comply with the

approved design or when there is evidence that the manufactured housing manufacturer is not performing under its approved quality control manual.

D. Plant Inspection Fee

There shall be a fee of $25.00 per unit for the inspection of all manufactured homes manufactured within the State of Arkansas. This fee shall be paid to the Commission. The manufacturer shall also be charged for reimbursement of mileage and per diem incurred by Commission personnel to and from the location of the manufacturer.

E. Special Request for Inspection.

When requests are made for inspections other than the regular monitoring plant inspections, a fee of $30.00 per hour shall be charged to the manufacturer and paid to the Commission. The manufacturer shall also be charged for reimbursement of mileage and per diem incurred by Commission personnel to and from the location of the manufacturer.

F. Increased Frequency Inspection Fee

There shall be a fee of $25.00 per unit for each reinspection for increased frequency inspections. An increased frequency inspection shall be scheduled by the Commission when inspections at a manufacturing facility reveal repeated failures to conform to the approved designs or when there is evidence that the manufactured home manufacturer is not performing under its approved quality control manual. The Commission may advise the manufacturer prior to the date of the scheduled inspection and the manufacturer shall comply with instructions, if any, relative to the increased frequency inspection. The manufacturer shall also be charged for reimbursement of mileage and per diem incurred by Commission personnel to and from the location of the manufacturer.

G. Monitoring Inspection Fee

There shall be a fee established by the Secretary of the Department of Housing and Urban Development in compliance with 24 C.F.R. 3282.302 (b)(6) to be paid by each manufacturer in this state for each manufactured home produced in this State. The monitoring inspection fee shall be distributed according to federal regulations.

H. Other Special Inspections

When special inspections are requested by an unlicensed or uncertified person or company, a fee of twenty dollars ($20.00) per hour may be charged to the company or person requesting the inspection and paid to the Commission. The company or person shall also be charged for reimbursement of mileage and per diem incurred by Commission personnel to and from the location of the inspection.

The Manufactured Housing Recovery Fund shall consist of trust fund receipts derived from fees assessed by the Arkansas Manufactured Home Commission under the authority of Arkansas law and shall be used for such purposes as are set out in this section. The Commission shall collect such assessments from manufacturers, retailers and installers.

Section 500. Assessments and Refunds

A. Initial Assessments

The Commission shall collect the following assessment fees at the time of submission of initial certification or licensure applications:

1. Installer - $2,500.00 per location

2. Retailer - $5,000.00 per location

3. Manufacturer - $10,000.00 per location

B. Special Assessments

If the balance of the Manufactured Housing Recovery Fund falls below two hundred fifty thousand dollars ($250,000), then the Commission may collect an annual assessment from each manufacturer of manufactured homes in this state, manufacturer of manufactured homes in other states selling manufactured homes in this state, and installers and retailers. The annual assessment shall continue until such time as the fund is restored to a minimum level of two hundred fifty thousand dollars ($250,000).

Such annual assessments collected shall not exceed the following amounts:

1. Installer - $500.00 per location

2. Retailer - $1,000.00 per location

3. Manufacturer - $3,000.00 per location

C. Refund

1. Any participant shall receive a refund of its initial assessment after a two (2) year waiting period after it ceases operation of its business in this State provided there are no claims pending against such participant, provided:

   (a) The participant shall notify the Arkansas Manufactured Home Commission by certified mail within forty-five (45) days after the two (2)

year waiting period and request the refund or the assessment fee shall be forfeited; and,

(b) The two (2) year waiting period shall begin on the participant's next certification or licensing anniversary date after the participant ceases operation of its business in this state.

2. If the participant fails to satisfy the provisions found in B(1)(A) and (B), the assessment fee shall remain in the Manufactured Housing Recovery Fund.

3. No interest will accrue to the benefit of such participant.

Section 501. Claims, Eligibility and Administration of Fund

A. Complaints/Claims

All consumer, licensee, installer, retailer or manufacturer complaints shall be filed with the Commission. The Commission shall determine by hearing or whatever procedure it establishes first, if any, standard adopted by the Commission has been violated and, if so, the actual cost of repairs to the manufactured home, if any, suffered by the aggrieved party or parties.

B. Eligibility

For a claim against the fund to be considered, the Commission must determine the following:

1. That the home in question is located and occupied in the state of Arkansas,

2. That, at the time of the claim, the manufacturer, retailer or installer involved in the claim has an assessment on deposit in the fund, and

3. That the manufacturer, retailer or installer is unwilling or unable to take corrective action as directed by the Commission.

C. Amount of Damages Awarded

1. The amount of damages awarded by the Commission shall be limited to the actual cost of repairs to the manufactured home and shall not include attorneys' fees. On appeal to Circuit Court from an award of the Commission, the jurisdiction of the Circuit Court shall be limited to the actual cost of repairs to the manufactured home. The Circuit Court shall not have jurisdiction to award punitive or exemplary damages for claims covered by the provisions of Act 419 of 1977 as amended, attorneys' fees or costs.

2. Upon a finding by the Commission that a standard has been violated, the Commission shall direct the respondent licensee, retailer, installer or

manufacturer to correct the violation within a reasonable time, not to exceed ninety (90) days following the written decision of the Commission. If the violation is not corrected within ninety (90) days following the written decision of the Commission and no appeal has been filed in Circuit Court of the decision, the Commission shall, upon request, pay from the Manufactured Housing Recovery Fund the actual cost of repairs to the manufactured home, if:

(a) The amount is not in excess of $10,000.00 for any one violation of the respondent licensee, installer, retailer or manufacturer;

(b) The fund balance is sufficient to pay the award;

(c) The complainant has assigned to the Commission all rights and claims that they have against the respondent; and,

(d) The complainant agrees to subrogate the Commission to all rights of the complainant to the extent of the payment.

3. The question of what constitutes a continuing series of violations shall be a matter solely within the discretion and judgment of the Commission.

4. Nothing herein shall obligate the fund for any amount in excess of the following with respect to the actions of any one licensee, installer, retailer or manufacturer:

(a) $12,500.00 per installer;

(b) $25,000.00 per retailer; and

(c) $75,000.00 per manufacturer.

D. Appeals

1. Appeals from a decision of the Commission shall be to the Circuit Court in accordance with the Arkansas Administrative Procedure Act. Such appeal shall stay that portion of the Commission order which directs payment of the damage. Neither the respondent nor the Commission shall be required to pay damages to the complainant until such time as a final order of the Circuit Court, Court of Appeals or Supreme Court is issued.

2. On appeal, the Circuit Court jurisdiction in awarding damages to be paid from the fund shall be limited in amount to:

(a) the amount determined by the Commission, or

(b) the limits set forth herein. The Court shall not award attorneys' fees or court costs to be paid by the fund.

E. Suspension

1. The Commission shall suspend the license or certificate of each licensee, installer, retailer or manufacturer until such time as same reimburses award amounts paid on its behalf to the fund plus interest at a rate to be determined by the Commission but not to exceed ten percent (10%) per annum.

2. The Commission may permanently suspend the license or certificate of the respondent upon failure to pay an order of the Commission or court.

3. The Commission may move the Circuit Court to suspend the license or certificate of the respondent during pendency of an appeal from a Commission order.

F. Establishment of Training and Educational Programs

On January 1 of any year, if the fund established in this chapter exceeds four hundred thousand dollars ($400,000.00), the Arkansas Manufactured Home Commission may approve the use of up to five percent (5%) of the fund balance above that amount for training and education programs; including but not limited to: workshops, instruction manuals, audio and video tapes, and presentations.

CHAPTER VI. INSTALLATION AND ANCHORING SPECIFICATIONS

Section 600. Installation Standards for New Homes, Used Homes

The Arkansas Manufactured Home Commission by regulation shall set uniform reasonable standards for the proper initial installation of new manufactured homes installed in this state, provided that such installation standards equal or exceed installation standards promulgated under the Federal standards

The commission by regulation shall set uniform reasonable standards for the proper secondary installation of used manufactured homes installed in this state.

The person, firm or corporation providing the installation of a manufactured home shall be responsible for making sure the installation and anchoring of such manufactured home meets the manufacturer's installation requirements or the Commission's installation regulations, as follows:

A. New Manufactured Homes

New single section and multi-section manufactured homes shall be installed according to the manufacturer's installation instructions.

B. Used Manufactured Homes

Used single section and multi-section manufactured homes shall be installed according to the Arkansas Manufactured Home Commission's installation specifications, as set forth in these regulations.

C. Alternative Systems Allowed

It is not the intent of these regulations to prohibit the installation of any manufactured home in which the methods or materials used in the installation of the support system meets or exceeds the requirements of the manufacturer's installation instructions or the Arkansas Manufactured Home Commission's installation specifications, as set forth in these regulations, as related to foundation stability and/or load bearing capacity.

Section 601. Elements of Installation

As used in these regulations, 'Installation' shall include***:***

1. The requirements for I-beam, center-line, and perimeter pier support columns and footings;

2. Marriage line, utility and other cross-over connections (if applicable);

3. Anchoring systems and equipment, as prescribed in the manufacturer's installation instructions or the Arkansas Manufactured Home Commission's installation specifications; and

4. Any other installation requirements outlined in the manufacturer's installation instructions for new homes or the Arkansas Manufactured Home Commission's installation specifications for used homes.

Section 602. State Installation Specifications

A. Site Preparation

1. All decayable materials, including grass, leaves, roots and wood, shall be removed from under the locations of footings and foundations. Manufactured home purchasers shall provide a site suitable for the placement of a home.

2. Footings and foundation base blocks shall rest on undisturbed or minimum ninety percent (90%) compacted soil of uniform density and thickness or equivalent base material.

3. Soil classification and bearing capacity of the soil must be determined before the foundation is constructed and anchored. Soil classification and bearing capacity

may be determined by one or more of the following methods, unless the soil bearing capacity is established as permitted in (f) of this section:

a. Soil tests in accordance with generally accepted engineering practices;

b. Soil records of the applicable local authority having jurisdiction;

c. A pocket penetrometer; or

d. If soil classification or bearing capacity cannot be determined by test or soil records, the classification, allowable pressures and torque value shown in the table below may be used.

Soil Classification					
Classification Number	**ASTM D 2478-00 or D 2488-00**	**Soil Description**	**Allowable Soil Bearing Pressure PSF**	**Blow Count ASTM D 1586-99**	**Torque Probe Value (inch-pounds)**
1		Rock or Hard Pan	4000 +		
2	*GW, GP, SW, SP, GM, SM*	Sandy Gravel & Gravel; Very Than Dense and/or Cemented Sands; Course Gravel/Cobbles; Preloaded Silts, Clays & Corals	2000	40 +	More Than 550
3	*GC, SC, ML, CL*	Sand; Silty Sand; Clayey Sands; Silty Gravel; Medim Dense Course Sands; Sandy Gravel; and Very Stiff Silt, Sand Clays	1500	24-39	351-550
4A	*CG. MH2*	Loose to Medium Dense Sands; Firm to Stiff Clays & Silts; Alluvial Fills	1000	18-23	276-350
4B	*CH, MH2*	Loose Sands; Firm Clays; Alluvial Fills	1000	12-17	175-275
5	*OL, OH. PT*	Uncompacted Fill; Peat; Organic Clays		0-11	Less Than 175

e. In lieu of determining soil bearing capacity by use of the methods listed in this section, an allowable pressure of 1000 pounds per square foot (psf) may be used, unless the site-specific information requires the use of lower values based on soil classification and type.

f. If the soil appears to be composed of peat, organic clays or uncompacted fill, a registered geologist, registered professional engineer or registered architect must determine the soil classification and maximum allowable soil bearing capacity.

g. The installation shall not contribute to ponding of water under the home.

B. Pier Foundations - Footings

1. The foundation specifications contained in this section are not intended to address flood loads or special site conditions. Consult the LAHJ or a registered engineer if the home is to be located in a flood hazard area or has special site considerations.

2. Support foundations for each pier shall be concrete, either site built or pre-cast, having minimum dimensions sixteen inches by sixteen inches by four inches *(16“ x 16“ x 4“)*. Other pier support materials may be used if accepted by the manufacturer and the Commission.

3. The surface texture of poured concrete footings at each pier location shall be such that the first pier block placed at these locations shall sit firmly and evenly. If a firm, level contact between the first pier block and the surface of the footing is not possible because of surface irregularities in the footing; masonry mortar shall be used between the entire bottom surface of the first pier block and the footing to establish a solid interface contact which is level.

4. Pre-cast concrete footings (solid pad blocks) shall be installed in a level position with the entire bottom surface in contact with the site surface.

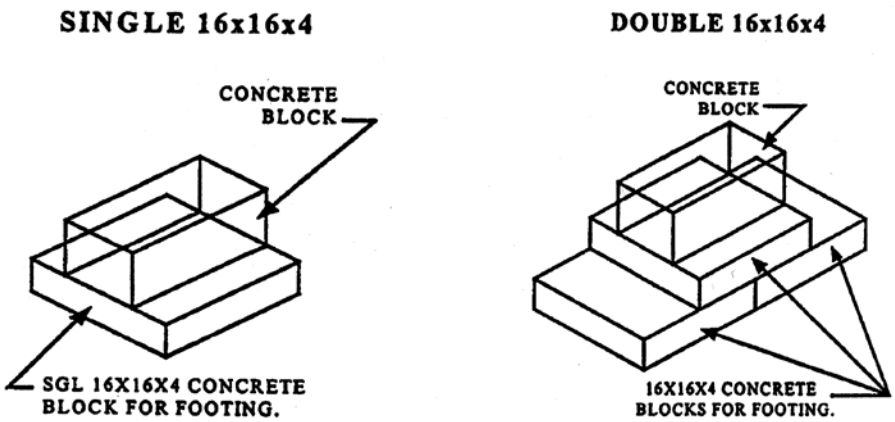

5. Using the soil capacity, as described in Section 602(A)(3), footings should be sized according to the table below.

FOOTER SIZING TABLE

Based on Soil Bearing Capacity

Opening Size	**1000 PSF**	**1500 PSF**	**2000 PSF**	**4000 PSF**
4' – 8'	*400 sq in*	*256 sq in*	*256 sq in*	*256 sq in*
8' – 16'	*576 sq in*	*400 sq in*	*256 sq in*	*256 sq in*
16' – 20'	*784 sq in*	*576 sq in*	*400 sq in*	*256 sq in*
20' – 28'	*1156 sq in*	*784 sq in*	*576 sq in*	*256 sq in*
I-Beam Footers ***(8' Max Spacing)***	*576 sq in*	*400 sq in*	*256 sq in*	*256 sq in*

C. Piers - Support Columns

1. Piers - General Construction

a. All piers shall be installed on footings or foundations and shall be centered under the I-beam. All pier columns shall be centered on the footing or foundation.

b. No manufactured home piers shall be located more than eight feet (8') apart on center. The first pier shall be located within two feet (2') from either end of each I-beam.

c. The installation of foundations and piers shall be constructed in a manner that shall demonstrate acceptable workmanship. Each course of all piers shall be laid level and true to the vertical and horizontal line.

d. Upon completion of the pier support system, the manufactured home shall be reasonably level in the longitudinal and side-to-side directions.

2. *Piers - Block Requirements*

Piers shall be constructed of eight inches by eight inches by sixteen inches *(8" x 8" x 16")* concrete building blocks, open celled, solid, or equivalent which meet or exceed the specifications per ASTM C90, ground-contact rated. Open celled blocks shall be installed with the open cells vertical.

3. *Piers - Height Regulations*

a. No pier shall be installed which is less than twelve inches *(12")* in height.

b. Piers of three courses of blocks or less shall be of single block construction. All piers of single block construction installed under the main I-beam shall be installed perpendicular to the I-beam.

c. Piers that consist of more than three courses of blocks shall be of doubled block construction and alternate courses shall be interlocking.

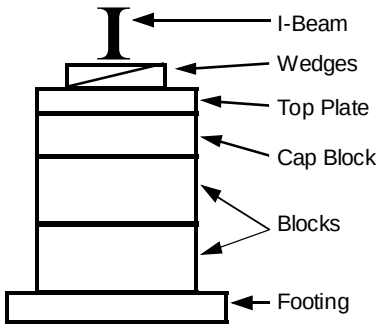

Single Block
Pier Construction

Three Courses of Blocks or Less

d. When the total height of a support column, including footing pier blocks, and wood, exceed fifty two inches *(52")*, the interlocking blocks shall be filled with concrete and reinforced with three-eighths inch *(3/8")* rebar.

e. When the footings, piers and wood exceed eighty inches *(80")* in height, the pier construction must be designed by a professional engineer or architect and submitted to the Arkansas Manufactured Home Commission for approval prior to installation.

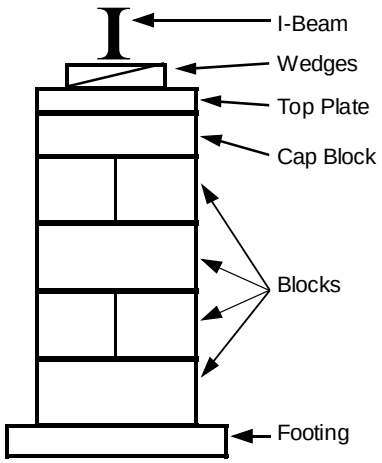

Double Block
Pier Construction

More Than Three Courses of Blocks

4. *Piers - Cap Blocks, Top Plates and Shims*

a. A combination of not more than two *(2)* solid concrete cap blocks two inches *(2")*, three inches *(3")* or four inches *(4")* by eight inches by sixteen inches *(8" x 16")* may be installed on top of the uppermost pier block. No combination of cap blocks may exceed seven inches *(7")* in height.

b. A two inches by eight inches by sixteen inches *(2" x 8" x 16")* (nominal)

pressure preservative treated wood plate(s) shall completely cover the top of the uppermost concrete building unit(s) of each pier.

c. Additional pressure preservative treated wooden shims with a minimum width of five and one-half inches *(5 1/2")* and a minimum length of twelve inches *(12")* and a minimum thickness of one-quarter inch *(1/4")* and a maximum thickness of one inch *(1")* may be used between the wood plate and the I-beam.

d. Hardwood wedges with a minimum width of four inches *(4")* and a minimum length of six inches *(6")* and a maximum installed thickness of one inch *(1")* may be used if placed directly between the last wooden member of the pier and the point of support. Wedges shall be centered and driven tight from both sides of the I-beam or marriage line perimeter joists.

5. Piers - Marriage Line and Perimeter Blocking

a. The marriage line of multi-section manufactured homes shall be supported by piers located no more than eight feet *(8')* apart on center and shall have piers located within two feet of each end of the marriage line. In addition to these piers, multi-section homes shall have piers located under the jamb studs or ridge beam column posts for openings in the marriage wall of four feet *(4')* or greater.

b. Piers shall also be located on each side of any exterior door, fireplace, bay window or any other opening of forty-eight inches *(48")* or more.

D. Multi-Section Homes - Marriage Line and Utility Connections

1. Multi-Section Homes - Sealing of Marriage Line

a. All weatherproofing material (fir strips, plastic or vinyl sheeting) shall be removed from floor joints, marriage walls and end walls.

b. Sill sealer strips, expanding foam or other insulating material shall be installed along the ceiling, floor and end wall marriage lines to prevent air infiltration. Such strips or material (other than foam) shall be secured in place with staples or nails.

c. Gaps between floor sections or ridge beams, which do not extend the full length of the home, may not exceed two inches (2") in width and must be sealed with plywood, lumber or other building material. End wall marriage lines must be covered with exterior siding material to resist the elements.

2. Multi-Section Homes - Lag Bolting and Roof Ridge Connections

a. Floor sections shall be connected with lag bolts of at least five-sixteenths inch *(5/16")*, and of sufficient length to penetrate into the opposing floor

joist at least three-quarters inch *(3/4")*. Lag bolts shall be installed no more than twenty inches *(20")* apart on center, alternating sides. Bolting must not dislodge the rim joist.

b. Holes in bottom board caused by lag bolt installation must be sealed.

c. The roof ridge shall be covered with ridge cap or exterior roofing material to resist the elements and connected with:

1. Lag bolts installed no more than twenty inches *(20")* apart on center, alternating sides, or

2. At least one and one-half inch *(1 1/2")* twenty six gauge *(26 Ga.)* metal straps or equivalent, secured with staples, nails or screws. A strap shall be installed at each truss, extending at least six inches *(6")* on each side of the ridge.

3. Multi-Section Homes - Utility and Air Conditioning Cross-Over Connections

a. All utility connections made by the installing retailer or installer shall be protected from weather or other elements.

b. Electrical connections shall be made inside a junction box. Cross-over wiring shall be covered with access panels or be protected by conduit attached with clamps to junction boxes.

c. The chassis of each section of the home shall be electrically bonded to one another.

d. Air conditioning cross-over ducts shall be attached to each plenum with screws and wire ties, and taped to prevent air loss. The duct shall be suspended above the ground and fastened in place. Ties or straps used to suspend the duct shall not crush or crimp the duct in a manner that substantially reduces airflow.

Section 603. Anchoring Standards for New Homes, Used Homes

Anchoring is a mandatory requirement for any manufactured home installed in the State of Arkansas.

A. Anchoring - New Manufactured Homes

All new manufactured homes sold by certified retailers and installed in the State of Arkansas shall be anchored according to the home manufacturer's instructions. Manufacturers shall file with the Commission the anchoring instructions as approved by the manufacturer's Design Approval Primary Inspection Agency and shall provide prompt notification of changes, modifications or updates relating to installation and anchoring.

B. Anchoring - Used Manufactured Homes

Used manufactured homes installed in the State of Arkansas shall be anchored according to the Arkansas Manufactured Home Commission's anchoring specifications, as set forth in this section.

C. Alternative Systems Allowed

It is not the intent of these regulations to prohibit the anchoring of any manufactured home in which the methods or materials used in the anchoring system meets or exceeds the requirements of the manufacturer's anchoring instructions or the Arkansas Manufactured Home Commission's anchoring specifications, as set forth in these regulations, as related to resistance of overturning or lateral movement as imposed by respective design loads. Such alternative systems shall be certified by a professional engineer, architect or nationally recognized testing laboratory as to their resistance to overturning or lateral movement of the home.

Section 604. State Anchoring Specifications

A. Anchoring Equipment

The following criteria shall be used in the anchoring of any manufactured home installed in the state of Arkansas:

1. Anchoring equipment shall be capable of resisting an allowable working load equal to or exceeding 3,150 lbs. and shall be capable of withstanding a 50% overload (4,725 lbs. total) without failure of either the anchoring equipment or the attachment point on the home. Ground anchors shall be capable of resisting these loads in the soil in which the anchors are installed.

2. Anchoring equipment exposed to weathering shall have a resistance to weather deterioration at least equivalent to that provided by a coating of zinc on steel of not less than 0.30 ounces per square foot of surface coated.

3. Type 1, Finish B, Grade 1 steel strapping, one and one-quarter inches *(1-1/4")* wide and 0.035 inch thick, conforming with ATSM Standards Specification D3953-91 is judged to conform with the provisions of this section and paragraph (1) of this section.

4. Cable used as tiedown straps shall be of either galvanized steel or stainless. Steel cable shall be a minimum of three-eighths inch *(3/8")* in diameter. Aircraft cable shall be one-quarter inch *(1/4")* or larger in diameter.
5. Protection shall be provided at sharp corners where the anchoring systems require the use of external cables or straps.

6. Each manufactured ground anchor shall be listed and installed in accordance with its listing and the anchor manufacturer's instructions.

7. All anchors, straps, clips or other components of anchoring must be new and may not be re-used.

B. Anchoring - Single Section Homes

1. All single-section manufactured homes shall be anchored with diagonal anchoring straps attached to the frame in addition to the anchoring of the home by means of the over the top straps which may be supplied and built in by the manufacturer. The number of diagonal frame anchors required shall be as follows:

   a. The diagonal frame anchors shall be located no more than two feet *(2')* from either end of the home on both I-beams and the additional anchors shall be located no more than ten feet *(10')* apart along each I-beam.

   b. Frame ties shall be installed according to the component manufacturer's instructions.

   c. If eye bolts are utilized as the frame attachment component, they shall be at least five-eighths inch *(5/8")* in diameter and shall be bolted through the vertical portion of the I-beam.

   d. All the vertical tie straps that are built into the home by the manufacturer shall be used to anchor the home in addition to the frame anchors which are required by this section.

C. Anchoring - Multi-Section Homes

1. Multi-section manufactured homes require only diagonal frame ties and anchoring. Such ties shall be installed according to the manufacturer's DAPIA approved anchoring instructions. In the case of used multi-section homes, the anchoring shall be done according to the regulations and specifications set forth in this section.

2. The number and spacing of frame ties and anchors required for multi-section manufactured homes shall be ased upon the length of the home and shall be the same spacing as that specified or single-section manufactured homes in Section (B)(1)(a).

D. Anchoring - Installation of Ground, Rock and Concrete Anchors

1. All ground anchor systems and each component as used in each ground system (soil, gravel, rock, etc.) shall be capable of withstanding without failure a vertical and diagonal pull of 4,725 pounds at each tie for single-headed anchors or 9,450 pounds for double-headed anchors. Any anchor installed shall be used in the ground system for which it was designed and listed.

2. Ground and rock anchors shall be at least eleven-sixteenths inch *(11/16")* thick and be buried to a depth of at least three feet *(3')*. If longer anchors are used,

they shall be buried to full depth.

3. Concrete slab anchors shall be installed according to the anchor manufacturer's instructions and shall be capable of withstanding without failure a vertical and diagonal pull of 4,725 pounds for each separate anchoring strap attached.

5. After the anchors have been properly installed, all anchoring straps shall be tensioned according to the home manufacturer's installation instructions or the anchor manufacturer's instructions.

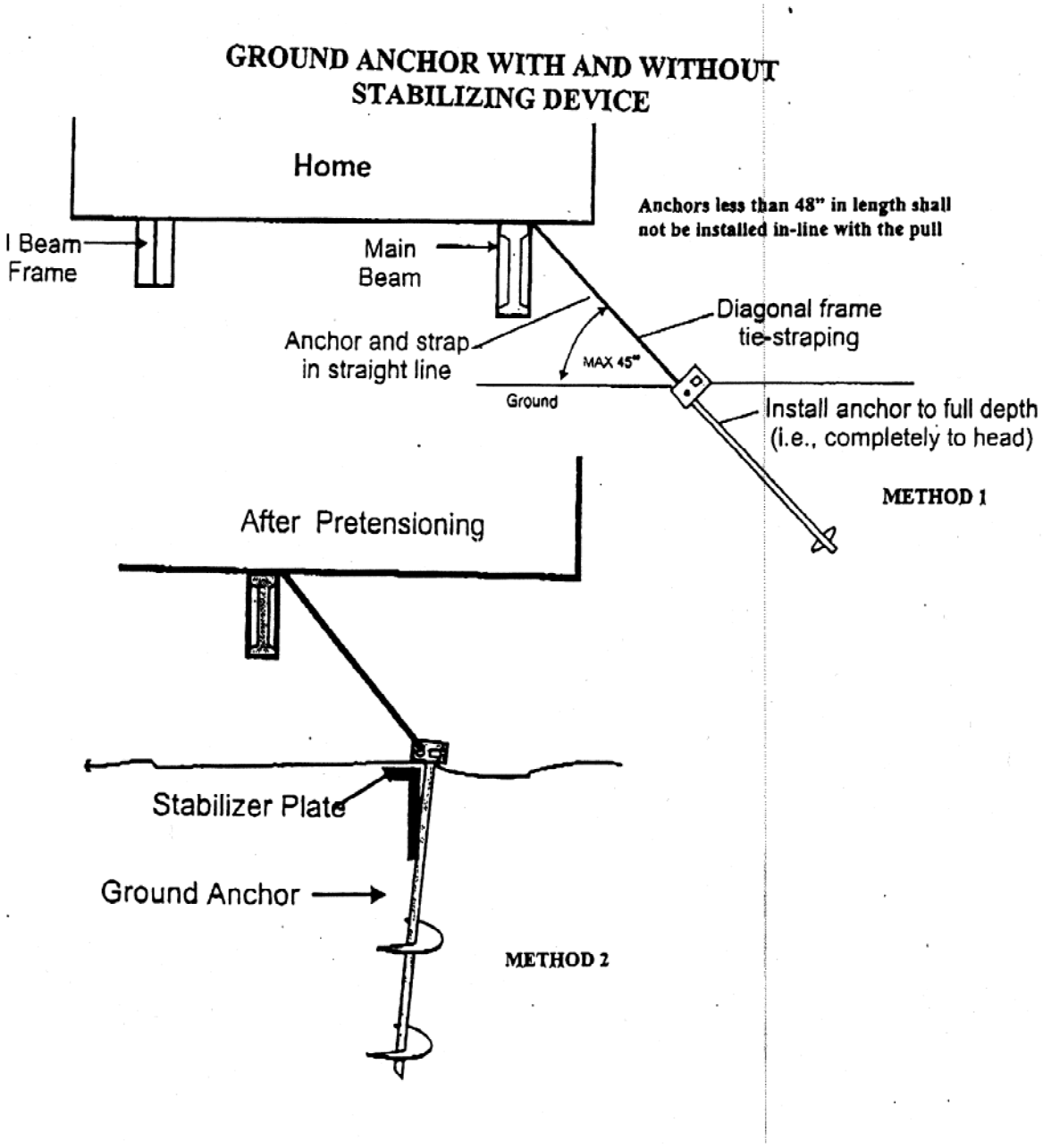

PROPER TENSIONING OF STRAP TO ANCHOR HEAD

1. 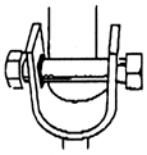

Insert bolt into head; attach nut loosely. Insert strap in slot of 5/8" bolt until strap is flush with far side of bolt.

2. 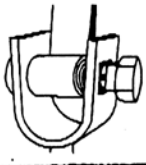

Bend strap 90° and take at least three complete turns on bolt unti strap is taut.

3. Bolt is turned with 15/16" socket wrench, or adjustable wrench, on hex head. With square hole in anchor head, hold bolt under tension while repositioning wrench: Place open-end wrench on 5/8" square shoulders of bolt. Align square shoulders of bolt with square hole in anchor head.

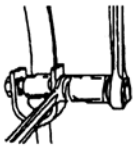

4. 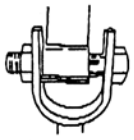

Holding hex head of bolt in position, tighten nut to draw square shoulders into square hole. Shoulders are now in locking position; continue to tighten nut. Tensioning device is now in locked, secure position.