ARKANSAS
STATE BOARD OF HEALTH

Radiation Control and Emergency Management Programs

RULES AND REGULATIONS

FOR

CONTROL OF SOURCES OF IONIZING RADIATION

Promulgated Under the Authority of Act 96 of 1913

and

Act 8 of the Second Extraordinary Session of 1961, As Amended

Effective Date January 1, 1963

This Revision Effective July 1, 2002

By the Arkansas State Board of Health

Arkansas Department of Health
Little Rock, Arkansas

Fay Boozman, M.D., Director

TABLE OF CONTENTS

CHAPTER XXXIV

SECTION 1. REGISTRATION OF SOURCES OF RADIATION **Page**

Part A General 1
RH-1 Authority 1
RH-2. Effective Date 1
RH-3. Registration Requirement 1
RH-4. Communications 1
RH-5. Additional Requirements 1
RH-6.- RH-9. Reserved 1

Part B Definitions 1
RH-10. General Definitions 1
RH-11.- RH-19. Reserved 2

Part C. Registration of Radiation Machines 3
RH-20. Reportable Sources of Radiation 3
RH-21. Initial Registration 3
RH-22. Renewal of Registration 3
RH-23. Registration Form 3
RH-24. Separate Installations 3
RH-25. Special Registration 3
RH-26. Report of Change 3
RH-27. Report of Discontinuance 3
RH-28. Deleted 3
RH-29. Reserved 3

Part D. Registration of Vendor Services 4
RH-30. Purpose and Scope 4
RH-31. Installers of Radiation machines 4
RH-32. Registration Form 4
RH-33. Training 4
RH-34. Services 4
RH-35. Assembler and/or Transfer Requirement 5
RH-36.- RH-39. Reserved 6

Part E. Exclusions from Registration 6
RH-40. Excluded Material and Devices 6
RH-41. Excluded Possessors 6
RH-42.- RH-49. Reserved 6

Part F. Inspection, Exemptions and Additional Requirements 7
RH-50. Radiation Protection Standards 7
RH-51. Records to be Maintained 7
RH-52. Access to Premises 7
RH-53. Access to Records 7
RH-54. Tests 7
RH-55. Exemptions 8
RH-56. Additional Requirements 8

SECTION 1. REGISTRATION OF SOURCES OF RADIATION (Continued)

RH-57. Out-of -State Registration 8
RH-58 Registration Fees 9
RH-59. Reserved 9

Part G. Prohibited Uses 9
RH-60. Hand-Held Fluoroscopic Screens Prohibited 9
RH-61. X-Ray Shoe-Fitting Equipment 9
RH-62.- RH-69. Reserved 9

Part H. Enforcement 10
RH-70. Violations 10
RH-71.- RH-99. Reserved 10

SECTION 2. LICENSING OF RADIOACTIVE MATERIALS 11

Part A. General 11
RH-100. Authority 11
RH-101. Effective Date 11
RH-102. License Requirement 11
RH-103. License Fee 11
RH-104. Communications 11
RH-105.- RH-199. Reserved 11

Part B. Definitions 12
RH-200. General Definitions 12
RH-201.- RH-299. Reserved 19

Part C. Exemptions 20
RH-300. Source Material 20
RH-301. Other Radioactive Materials 22
RH-302. Carriers 27
RH-303. U.S. Department of Energy Contractors & U.S. Nuclear Regulatory Commission Contractors 27
RH-304. Other Exemptions 28
RH-305. Exempt Quantities 28
RH-306.- RH-399. Reserved 28

Part D. Licenses 29
RH-400. Types of Licenses 29
RH-401. General Licenses - Source Material 29
RH-402. General Licenses - Other Radioactive Materials 30
RH-403. Specific Licenses 41
RH-404. General Requirements for the Issuance of Specific Licenses 46
RH-405. Special Requirements for Issuance of Certain Specific Licenses 48
RH-406. Special Requirements for Specific Licenses of Broad Scope 73
RH-407. Special Requirements for Land Disposal of Radioactive Waste 78
RH-408. Issuance of Specific Licenses 100
RH-409. Specific Terms and Conditions of Licenses 101
RH-410. Expiration and Termination of Licenses and Decommissioning of Sites and Separate Buildings or Outdoor Areas 108

SECTION 2. LICENSING OF RADIOACTIVE MATERIALS (Continued)

RH-411. Renewal of Licenses 114
RH-412. Amendment of License at Request of Licensee 114
RH-413. Department Action on Application to Renew or Amend 114
RH-414. Inalienability of Licenses 114
RH-415. Reserved 114
RH-416. Modification, Revocation & Termination of Licenses 115
RH-417.- RH-499. Reserved 115

Part E. Transfer of Material 116
RH-500. Authorization for Transfer 116
RH-501. Condition of Transfer 116
RH-502. Preparation of Material 117
RH-503.- RH-599. Reserved 117

Part F. Records, Reports and Inspections 118
RH-600. Records 118
RH-601. Inspections 119
RH-602. Tests 120
RH-603.- RH-699. Reserved 120

Part G. Enforcement 120
RH-700. Violations 120
RH-701.- RH-749. Reserved 120

Part H. Reciprocity 121
RH-750. Reciprocal Recognition of Licenses 121
RH-751. Additional Requirements 122
RH-752.- RH-899. Reserved 122

Part I. Schedules 123
RH-900. Schedule A: Generally Licensed Equipment, When Manufactured in Accordance with Specific License 123
RH-901. Schedule B: Exempt Quantities 124
RH-902. Schedule C: Exempt Concentrations 127
RH-903. Schedule D: Groups of Diagnostic Uses of Radioactive Material in Humans 131
RH-904. Schedule E: Limits for Broad Licenses 133
RH-905. Schedule F: Quantities of Radioactive Material Requiring Consideration of the Need for an Emergency Plan for Responding to a Release 137
Appendix A: Criteria Relating to Use of Financial Tests and Parent Company Guarantees for Providing Reasonable Assurance of Funds for Decommissioning 140
Appendix B. Criteria Relating to Use of Financial Tests and Self Guarantees for Providing Reasonable Assurance of Funds for Decommissioning 143
Appendix C. Criteria Relating to Use of Financial Tests and Self Guarantees for Providing Reasonable Assurance of Funds for Decommissioning by Commercial Companies That Have no Outstanding Rated Bonds 146
Appendix D. Criteria Relating to Use of Financial Tests and Self Guarantees for Providing Reasonable Assurance of Funds for Decommissioning by Nonprofit Colleges, Universities, and Hospitals 149

Footnotes for Section 2 152

SECTION 3. STANDARDS FOR PROTECTION AGAINST RADIATION..... 154

Part A. General..... 154
RH-1000. Authority..... 154
RH-1001. Effective Date..... 154
RH-1002. Purpose and Scope 154
RH-1003. Communications 154
RH-1004. Radiation Protection Program..... 155
RH-1005.- RH-1099. Reserved 155

Part B. Definitions..... 156
RH-1100. Definitions 156
RH-1101. Other Definitions 173
RH-1102. Units of Radiation Dose 174
RH-1103. Units of Radioactivity 176
RH-1104. Interpretations..... 177
RH-1105. Implementations 177
RH-1106.- RH-1199. Reserved..... 177

Part C. Permissible Doses, Levels and Concentrations 178
RH-1200. Occupational Dose Limits for Adults..... 178
RH-1201. Compliance with Requirements for Summation of External and Internal Doses..... 179
RH-1202. Determination of External Dose from Airborne Radioactive Material..... 180
RH-1203. Determination of Internal Exposure 180
RH-1204. Reserved..... 182
RH-1205. Planned Special Exposures..... 182
RH-1206. Occupational Dose Limits for Minors 183
RH-1207. Dose to an Embryo/Fetus 184
RH-1208. Dose Limits for Individual Members of the Public..... 184
RH-1209. Compliance with Dose Limits for Individual Members of the Public .. 185
RH-1210. Radioactivity in Effluents to Uncontrolled Areas..... 186
RH-1211. Orders Requiring Furnishing of Bioassay Services..... 189
RH-1212. Leak Tests. 189
RH-1213. Surface Contamination Limits for Facilities and Equipment 190
Footnotes for Table RH-1213.b Acceptable Surface Contamination Levels 191
RH-1214. Release of Individuals Containing Radiopharmaceuticals for Permanent Implants 192
RH-1215. Reserved..... 193
RH-1216. Radiological Criteria for Unrestricted Use 193
RH-1217. Criteria for License Termination Under Restricted Conditions 193
RH-1218. Alternate Criteria for License Termination 196
RH-1219. Public Notification and Public Participation 197
RH-1220. Minimization of Contamination..... 197
RH-1221.- RH-1299. Reserved..... 197

Part D. Precautionary Procedures 198
RH-1300. Surveys 198
RH-1301. Personnel Monitoring..... 198

SECTION 3. STANDARDS FOR PROTE CTION AGAINST RADIATION, (Continued)

RH-1302. Conditions Requiring Individual Monitoring of External and Internal Occupational Dose 199
RH-1303. Caution Signs, Labels, and Signals 200
RH-1304. Exceptions From Posting Requirements 214
RH-1305. Instruction of Personnel; Posting of Notice to Employees 215
RH-1306. Storage of Sources of Radiation 215
RH-1307. Procedures for Picking up, Receiving, and Opening Packages 215
RH-1308. Control of Material Not in Storage 217
RH-1309.- RH-1399. Reserved 217

Part E. Waste Disposal 218
RH-1400. General Requirement 218
RH-1401. Method for Obtaining Approval of Proposed Disposal Procedures 218
RH-1402. Disposal by Release Into Sanitary Sewerage 219
RH-1403. Disposal by Burial in Soil 219
RH-1404. Treatment or Disposal by Incineration 220
RH-1405. Disposal of Specific Wastes 220
RH-1406. Transfer for Disposal and Manifests 220
RH-1407. Compliance with Environmental and Health Protection Regulations 221
RH-1408.- RH-1499. Reserved 221

Part F. Records, Reports, Notification and Tests 222
RH-1500. Records of Radiation Protection Programs, Surveys, and Radiation Monitoring Disposal 222
RH-1501. Reports of Theft or Loss of Sources of Radiation 228
RH-1502. Notification of Incidents 230
RH-1503. Tests 233
RH-1504. Reports of Exposures, Radiation Levels, and Concentrations of Radioactive Material Exceeding the Limits 234
RH-1505. Notifications and Reports to Individuals 235
RH-1506. Vacating Premises 236
RH-1507. Records and Reports of Misadministration 236
RH-1508. Deleted 237
RH-1509. Reports of Individual Monitoring 237
RH-1510. Quality Management Program 239
RH-1511. Deliberate Misconduct 241
RH-1512. Records Required at Temporary Jobsites 242
RH-1513.- RH-1599. Reserved 242

Part G. Special Requirements for The Use of X-Rays in the Healing Arts 243
RH-1600. Scope 243
RH-1601. Definitions as Used in these Regulations 243
RH-1602. General Requirements 252
RH-1603. Fluoroscopic X-Ray Systems 262
RH-1604. Radiographic Systems Other than Fluoroscopic, Dental Intraoral or Veterinarian Systems 271
RH-1605. Reserved 281
RH-1606. Intraoral Dental Radiographic Systems 281
RH-1607. Therapeutic X-Ray Systems of Less than One MeV 285

SECTION 3. STANDARDS FOR PROTECTION AGAINST RADIATION, (Continued)

RH-1608. X-Ray and Electron Therapy Systems with Energies of One MeV and Above 294
RH-1609. Veterinary Medicine Radiographic Installations..... 314
RH-1610. Mammography Systems 315
RH-1611. Bone Densitometry 330
Schedule A. Information to be Submitted by Person Proposing to Conduct Healing Arts Screening 331
RH-1612.- RH-1699. Reserved 332

Part H. Special Requirements for the Use of Sealed Radioactive Sources in the Healing Arts..... 333
RH-1700. General Provisions 333
RH-1701. Interstitial, Intracavitary, and Superficial Applications 333
RH-1702. Teletherapy 335
RH-1703.- RH-1799. Reserved 342

Part I. Radiation Safety Requirements for Industrial Radiographic Operations.... 343
RH-1800. General provisions 343
RH-1801. Equipment Control 355
RH-1802. Personnel Radiation Safety Requirements for Radiographers and Radiographer's Assistants..... 366
RH-1803. Precautionary Procedures in Radiographic Operations 374
RH-1804. Subjects to be Covered During the Instruction of Radiographers 383
RH-1805.- RH-1899. Reserved 384
Appendix IRC Radiographic Certification 385

Part J. Radiation Safety Requirements for Wireline Service Operations and Subsurface Tracer Studies..... 388
RH-1900. General Provisions 388
RH-1901.- RH-1910. Reserved 390
RH-1911. Application for a Specific License 390
RH-1912. Reserved..... 390
RH-1913. Specific Licenses for Well Logging 391
RH-1914. Reserved..... 392
RH-1915. Agreement with Well Owner or Operator..... 392
RH-1916. Reserved..... 393
RH-1917. Request for Written Statements..... 394
RH-1918.- RH-1930. Reserved 394
RH-1931. Labels, Security, and Transportation Precautions..... 394
RH-1932. Reserved..... 395
RH-1933. Radiation Detection Instruments..... 395
RH-1934. Reserved..... 395
RH-1935. Leak Testing of Sealed Sources..... 396
RH-1936. Reserved..... 397
RH-1937. Physical Inventory..... 397
RH-1938. Reserved..... 397
RH-1939. Records of Material Use 398
RH-1940. Reserved..... 398
RH-1941. Design and Performance Criteria for Sealed Sources..... 398
RH-1942. Reserved..... 399
RH-1943. Inspection, Maintenance, and Opening of a Source or Source Holder..... 400

RH-1944. Reserved 400
RH-1945. Subsurface Tracer Studies 401
RH-1946. Reserved 401
RH-1947. Radioactive Markers 401
RH-1948. Reserved 401
RH-1949. Uranium Sinker Bars 401
RH-1950. Reserved 401
RH-1951. Use of a Sealed Source in a Well Without a Surface Casing 401
RH-1952. Reserved 401
RH-1953. Energy Compensation Source 402
RH-1954. Reserved 402
RH-1955. Tritium Neutron Generator Target Source 402
RH-1956.- RH-1960. Reserved 402
RH-1961. Training 402
RH-1962. Reserved 404
RH-1963. Operating and Emergency Procedures 404
RH-1964. Reserved 405
RH-1965. Personnel Monitoring 406
RH-1966. Reserved 406
RH-1967. Radiation Surveys 406
RH-1968. Reserved 407
RH-1969. Radioactive Contamination Control 407
RH-1970. Reserved 407
RH-1971. Security 407
RH-1972. Reserved 407
RH-1973. Documents and Records Required at Field Stations 408
RH-1974. Reserved 408
RH-1975. Documents and Records Required at Temporary jobsites 408
RH-1976. Reserved 409
RH-1977. Notification of Incidents and Lost Sources; Abandonment Procedures for Irretrievable Sources 409
RH-1978.- RH-1990. Reserved 410
RH-1991. Applications for Exemptions 411
RH-1992. Subjects to be Included in Training Courses for Logging Supervisors 412
RH-1993.- RH-1999. Reserved 413

Part K. Exemptions and Additional Requirements 413
RH-2000. Applications for Exemptions 413
RH-2001. Orders 413
RH-2002.- RH-2109. Reserved 413

Part L. Enforcement 413
RH-2110. Violations 413
RH-2111.- RH-2199. Reserved 413

Part M. Appendices 414
RH-2200. Appendix A: Concentrations in Air and Water Above Natural Background 414
RH-2201.- RH-2299. Reserved 433
RH-2300. Appendix B: For Use in RH-409, RH-1303, RH-1402, and RH-1403 433
RH-2301.- RH-2699. Reserved 435
RH-2700. Appendix C: Determination of A_1 and A_2 Quantities 436
RH-2701.- RH-2788. Reserved 448

SECTION 3. STANDARDS FOR PROTECTION AGAINST RADIATION, (Continued)

RH-2789. Appendix D: Reserved 448
RH-2790. Appendix E: Protection Factors for Respirators 449
RH-2791. Appendix F: List of Elements 453
RH-2792. Appendix G: ALIs and DACs of Radionuclides for Occupational Exposure, Effluent Concentrations; Concentrations for Release to Sewerage 454
RH-2793. Appendix H: Quantities of Licensed material Requiring labeling..... 507
RH-2794. Appendix I: U.S. Nuclear Regulatory Commission (NRC) Regional Offices..... 518
RH-2795. Appendix J: Requirements for Low-Level Waste (LLW) Transfer for Disposal at Land Disposal Facilities and Manifests 519
RH-2796.- RH-2800. Reserved 522

Part N. Notices, Instructions and Reports to Workers; Inspections 523
RH-2801. Purpose and Scope 523
RH-2802. Posting of Notices to Workers 523
RH-2803. Instructions to Workers 524
RH-2804. Notifications and Reports to Individuals 525
RH-2805. Presence of Representatives of Licensees or Registrants and Workers During Inspections..... 526
RH-2806. Consultation With Workers During Inspections 527
RH-2807. Requests by Workers for Inspections 528
RH-2808. Inspections Not Warranted; Informal Review 528
RH-2809.- RH-2823. Reserved 529
RH-2824. Department Form RH-11: Notice to Employees - Standards for Protection Against Radiation (rev 94)..... 530
RH-2825. Department Form Y: Cumulative Occupational Exposure History 531
RH-2826. Department Form Z: Cumulative Occupational Exposure History..... 533
RH-2827.- RH-2899. Reserved 534

Part O. Radiation Safety Requirements for Analytical X-Ray Equipment..... 535
RH-2900. Scope and Purpose 535
RH-2901. Definitions 535
RH-2902. Equipment Requirements 536
RH-2903. Area Requirements 537
RH-2904. Operating Requirements..... 538
RH-2905. Personnel Requirements 539
RH-2906.- RH-2999. Reserved 540

Footnotes for Section 3 540

SECTION 4. TRANSPORTATION OF RADIOACTIVE MATERIALS..... 543

Part A. General..... 543
RH-3000. Authority 543
RH-3001. Effective Date..... 543
RH-3002. Purpose Scope 543
RH-3003. Communications 544
RH-3004.- RH-3099. Reserved 544

SECTION 4. TRANSPORTATION OF RADIOACTIVE MATERIALS, (Continued)

Part B. Definitions 545
RH-3100. General Definitions 545
RH-3101.- RH-3199. Reserved 552

Part C. Requirements for Intrastate Transportation of Radioactive Materials 553
RH-3200. Transportation of Radioactive materials 553
RH-3201. Exemptions 553
RH-3202. Transportation of Radioactive Material 554
RH-3203. Deleted (See RH-3405) 554
RH-3204.- RH-3299. Reserved 554

Part D. Exemptions and Additional Requirements 555
RH-3300. Exemptions 555

Part E. General Licenses 556
RH-3301. General License For Carriers 556
RH-3302. General License For NRC Approved Packages 556
RH-3303. General License For Previously Approved Type B Packages 557
RH-3304. General License For DOT Specification Container 558
RH-3305. General License For Use of Foreign Approved Package 558
RH-3306. General License For Fissile Material, Limited Quantity Per Package 559
RH-3307. General License: Fissile Material, Limited Quantity, Controlled Shipment 560
RH-3308.- RH-3399. Reserved 561

Part F. Enforcement 562
RH-3400. Deleted 562
RH-3401. Routine Determination 562
RH-3402. Air Transport of Plutonium 565
RH-3403. Records 566
RH-3404. Reports 567
RH-3405. Advance Notification of Transport of Nuclear Waste 567
RH-3406.- RH-3499. Reserved 568

Part G. Quality Assurance 569
RH-3500. Quality Assurance Requirements 569
RH-3501.- RH-3999. Reserved 569
Footnotes for Section 4 569

SECTION 5. RULES OF PRACTICE 570

Part A. General 570
RH-4000. Authority 570
RH-4001. Effective Date 570
RH-4002. Scope 570
RH-4003. Communications 570
RH-4004. Reserved 570

SECTION 5. RULES OF PRACTICE, (Continued)

Part B. Administration 570
RH-4005 Administrative Examination of Applications 570
RH-4006. Action on Application, Hearings 571
RH-4007. Effect of Timely Renewal Applications 571
RH-4008. Notice of Violation 571
RH-4009. Orders 572
RH-4010. Emergency Orders 572
RH-4011. Enforcement of Obedience to Orders 572
RH-4012. Impounding Materials 573
RH-4013. Filing of Papers 573
RH-4014. Computation of Time 573
RH-4015. Extension of Time 573
RH-4016. Subpoenas, Service, and Papers 574
RH-4017. Representation 574
RH-4018. Intervention 574
RH-4019. Effect of Intervention or Denial Thereof 575
RH-4020. Consolidation 575
RH-4021. Hearings - Formal and Informal 575
RH-4022. Authority to Administer Oaths 575
RH-4023. Informal Hearings Procedure 576
RH-4024. Formal Hearings 576
RH-4025. Limited Appearances by Persons Not Parties 576
RH-4026. Designation of Hearing Officer 576
RH-4027. Function of Hearing Officer 576
RH-4028. Notice of Hearing 577
RH-4029. Answer 577
RH-4030. Reply 577
RH-4031. Default 578
RH-4032. Admissions 578
RH-4033. Prehearing Conferences 578
RH-4034. Public Hearings 578
RH-4035. Evidence in Formal Hearings 579
RH-4036. Briefs 579
RH-4037. Findings and Order 579
RH-4038. Appeals from Decision of Director 580
RH-4039. Waiver of Procedures 580
RH-4040. Public Records - Exceptions 580
RH-4041.- RH-4999. Reserved 581

SECTION 6. PARTICLE ACCELERATORS 582

Part A. General 582
RH-5000. Authority 582
RH-5001. Effective Date 582
RH-5002. Purpose and Scope 582
RH-5003. Fees 582
RH-5004. Communications 582
RH-5005.- RH-5099. Reserved 582

Part B. Definitions 583
RH-5100 General Definitions 583
RH-5101.- RH-5199. Reserved 584

SECTION 6. PARTICLE ACCELERATORS, (Continued)

Part C. Licenses 585
RH-5200. License Requirement 585
RH-5201. Licensing Procedures 585
RH-5202. General Requirements for the Issuance of a License for Particle Accelerators 586
RH-5203. Special Requirements for Issuance of a License for Particle Accelerators 586
RH-5204. Issuance of Particle Accelerator Licenses 588
RH-5205. Specific Terms and Conditions of Licenses 589
RH-5206. Expiration of Licenses 589
RH-5207. Renewal of License 590
RH-5208. Amendment of License at Request of Licensee 590
RH-5209 Department Action on Application to Renew or Amend 590
RH-5210. Inalienability of Licenses 590
RH-5211. Modification, Revocation and Termination of Licenses 590
RH-5212- RH-5299. Reserved 591

Part D. Exclusions From Licensing 592
RH-5300. Excluded Devices 592
RH-5301. Excluded Possessors 592
RH-5302.- RH-5399. Reserved 593

Part E. Radiation Safety Requirements for the Use of Particle Accelerators 594
RH-5400. General provisions 594
RH-5401. Limitations 594
RH-5402. Shielding Requirements 595
RH-5403. Accelerator Controls and Interlock Systems 595
RH-5404. Warning Devices 596
RH-5405. Operating Procedures 596
RH-5406. Personnel Monitoring Requirements 597
RH-5407. Radiation Monitoring Requirements 597
RH-5408. Ventilation and Waste Disposal Systems 598
RH-5409. Operating and Emergency Procedures 598
RH-5410. Minimum Subjects to be covered in Training Operators 599
RH-5411. Minimum Training Program for Particle Accelerator Operators 599
RH-5412.- RH-5499. Reserved 599

Part F. Exemptions, Additional Requirements, Inspections, and Tests 600
RH-5500. Exemptions 600
RH-5501. Additional Requirements 600
RH-5502. Inspections 600
RH-5503. Tests 600
RH-5504. Records and Reports of Misadministration 601
RH-5505.- RH-5599. Reserved 601

Part G. Enforcement 602
RH-5600. Violations, Impounding 602
RH-5601.- RH-5999. Reserved 602

SECTION 7. NATURALLY OCCURRING RADIOACTIVE MATERIAL (NORM). 603

Part A. General 603
RH-6000. Authority 603
RH-6001. Effective Date 603
RH-6002. Purpose 603
RH-6003. Scope 603

Part B. Definitions 604
RH-6004. General Definitions 604

Part C. Exemptions 607
RH-6005. Exemptions 607
RH-6006.- RH-6009. Reserved 607

Part D. Licenses 608
RH-6010. General License 608
RH-6011. Protection of Workers During Operation 610
RH-6012. Protection of the General Population From Releases of Radioactivity 610
RH-6013. Disposal and Transfer of Waste for Disposal 610
RH-6014. Containers 611
RH-6015 Tanks Containing NORM 612
RH-6016. Transportation of NORM 612
RH-6017. Radiation Survey and Counting Instrumentation 616
RH-6018. Site Surveys and Training 616
RH-6019. Worker Protection Plans 618
RH-6020. Specific Licenses 623
RH-6021. Filing Application for Specific License 624
RH-6022. Requirements for the Issuance of Specific Licenses 624
RH-6023. Safety Criteria 627
RH-6024. Table of Organ Doses 628
RH-6025. Issuance of Specific Licenses 629
RH-6026. Conditions of Licenses Issued Under RH-6022 629
RH-6027. Expiration and Termination of Licenses 631
RH-6028. Renewal of Licenses 633
RH-6029. Amendment of Licenses at Request of Licensee 633
RH-6030. Department Action on Applications to Renew and Amend 633
RH-6031. Modification and Revocation of Licenses 634
RH-6032. Vacating premises 634
RH-6033. Financial Assurance and Recordkeeping for Decommissioning 634
RH-6034.- RH-6039. Reserved 634

Part E. Reciprocity 635
RH-6040. Reciprocal Recognition of Licenses 635
RH-6050. Deleted 635

Part F. Appendix 636
Appendix A: Acceptable Surface Contamination Levels for NORM 636

SECTION 8. LICENSES AND RADIATION SAFETY REQUIREMENTS FOR IRRADIATORS..... 638

Part A. General..... 638
RH-7000. Reserved..... 638
RH-7001. Purpose and Scope..... 638
RH-7002. Definitions..... 639
RH-7003.- RH-7004. Reserved..... 640
RH-7005. Interpretations..... 640
RH-7006.- RH-7010. Reserved..... 640

Part B. Specific Licensing Requirements..... 641
RH-7011. Application for a Specific License..... 641
RH-7012. Reserved..... 641
RH-7013. Specific Licenses for Irradiators..... 641
RH-7014. Reserved..... 642
RH-7015. Start of Construction..... 643
RH-7016. Reserved..... 643
RH-7017. Applications for Exemptions..... 643
RH-7018. Reserved..... 643
RH-7019. Request for Written Statements..... 644

Part C. Design and Performance Requirements for Irradiators..... 645
RH-7020. Reserved..... 645
RH-7021. Performance Criteria for Sealed Sources..... 645
RH-7022. Reserved..... 646
RH-7023. Access Control..... 646
RH-7024. Reserved..... 648
RH-7025. Shielding..... 648
RH-7026. Reserve..... 648
RH-7027. Fire Protection..... 648
RH-7028. Reserved..... 648
RH-7029. Radiation Monitors..... 649
RH-7030. Reserved..... 649
RH-7031. Control of Source Movement..... 649
RH-7032. Reserved..... 649
RH-7033. Irradiator Pools..... 650
RH-7034. Reserved..... 650
RH-7035. Source Rack Protection..... 651
RH-7036. Reserved..... 651
RH-7037. Power Failure..... 651
RH-7038. Reserved..... 651
RH-7039. Design Requirements..... 651
RH-7040. Reserved..... 653
RH-7041. Construction Monitoring and Acceptance Testing..... 653
RH-7042.- RH-7050. Reserved..... 655

Part D. Operation of Irradiators..... 656
RH-7051. Training..... 656
RH-7052. Reserved..... 657
RH-7053. Operating and Emergency Procedures..... 658
RH-7054. Reserved..... 659
RH-7055. Personnel Monitoring..... 659

SECTION 8. LICENSES AND RADIATION SAFETY REQUIREMENTS FOR IRRADIATORS, (Continued)

RH-7056. Reserved 660
RH-7057. Radiation Surveys 660
RH-7058. Reserved 660
RH-7059. Detection of Leaking Sources 661
RH-7060. Reserved 662
RH-7061. Inspection and Maintenance 662
RH-7062. Reserved 663
RH-7063 Pool Water Purity 663
RH-7064. Reserved 663
RH-7065. Attendance During Operation 664
RH-7066. Reserved 664
RH-7067. Entering and Leaving the Radiation Room 664
RH-7068. Reserved 665
RH-7069. Irradiation of Explosive or Flammable Materials 665
RH-7070.- RH-7079. Reserved 665

Part E. Records 666
RH-7080. Reserved 666
RH-7081. Records and Retention Periods 666
RH-7082. Reserved 667
RH-7083. Reports 667
RH-7084.- RH-7090. Reserved 668

Part F. Enforcement 669
RH-7091. Violations 669
RH-7092.- RH-7999. Reserved 669

SECTION 9. USE OF RADIONUCLIDES IN THE HEALING ARTS 670

Part A. General 670
RH-8000. Purpose and Scope 670
RH-8001.- RH-8200. Reserved 670

Part B. Additional Requirements 670
RH-8201. Visiting Authorized User 670
RH-8202.- RH-8300. Reserved 670

Part C. Specific Requirements 671
RH-8301. Possession, Use, Calibration, and Check of Dose Calibrators 671
RH-8302. Measurement of Dosages of Radiopharmaceuticals For Medical Use 672
RH-8303. Permissible Molybdenum-99 Concentration 673

Part D. Specific Requirements For The Use of Radiopharmaceutical For Therapy 674
RH-8304. Safety Instructions for Hospitalized Radiopharmaceutical Patient Caregivers 674
RH-8305.- RH-8400. Reserved 674

SECTION 9. USE OF RADIONUCLIDES IN THE HEALING ARTS (Continued)

Part E. Specific Requirements For The Use of Sources For Brachytherapy 675
RH-8401. Use of Sources of Brachytherapy 675
RH-8402. Release of Patients Treated With Temporary Implants 675

Severability 676

Repeal 676

Certification 677

RADIOLOGICAL HEALTH

SECTION 1. REGISTRATION OF SOURCES OF RADIATION

PART A. GENERAL

RH-1. Authority. Act 96 of 1913, Act 8 of Second Extraordinary Special Session of 1961, as Amended.

RH-2. Effective Date. January 1, 1963.

RH-3. Registration Requirement. Every person possessing a reportable source of radiation shall register in accordance with the provisions of these Regulations.

RH-4. Communications. All communications concerning these Regulations shall be addressed to the Division of Radiation Control and Emergency Management, Arkansas Department of Health, 4815 West Markham, Mail Slot 30, Little Rock, Arkansas 72205-3867.

RH-5. Additional Requirements. In addition to the requirements of this Part, all registrants are subject to the applicable provisions of other Parts of these Regulations.

RH-6. - RH-9. Reserved.

PART B. DEFINITIONS

RH-10. General Definitions. As used in these Regulations. Additional definitions used only in a certain Part will be found in that Part.

a. Act - Act 8 of Second Extraordinary Special Session of 1961, as amended.

b. Decommission - To remove (as a facility) safely from service and reduce residual radioactivity to a level that permits release of the property for unrestricted use and termination of license.

c. Department - The Arkansas Department of Health.

d. Inspection - An official examination or observation including but not limited to, tests, surveys and monitoring to determine compliance with rules, regulations, orders, requirements and conditions of the Department.

RH-10. (Cont'd)

e. Installation - The location where one or more reportable sources of radiation are used, operated or stored.

f. Person - Any individual, corporation, partnership, firm, association, trust, estate, public or private institution, group, agency, political subdivision of this state or any other state or political subdivision or agency thereof and any legal successor, representative, agent or agency of the foregoing, other than the United States Nuclear Regulatory Commission and other federal government agencies.

g. Possessing a source of radiation - Using, operating, storing, manufacturing or otherwise having control of a source of radiation in the State of Arkansas.

h. Radiation - Ionizing radiation, i.e., gamma rays and x-rays, alpha and beta particles, high speed electrons, neutrons and other nuclear particles; but not sound or radio waves or visible, infrared or ultraviolet light.

i. Radiation machine - Any device capable of producing radiation, but excluding particle accelerators and devices which produce radiation only by the use of radioactive material.

j. Radioactive material - Any material, solid, liquid or gas which emits radiation spontaneously, including any natural radioactive material such as Radium.

k. Registrant - Any person who is registering or who has registered with the Department pursuant to these Regulations.

l. Reportable source of radiation - Any source of radiation as specified under RH-20 of these Regulations.

m. Source of radiation - Any radioactive material or device or equipment emitting or capable of producing any radiation.

n. These Regulations - The Arkansas State Board of Health Rules and Regulations for Control of Sources of Ionizing Radiation, Section 1.

RH-11. - RH-19. Reserved.

PART C.
REGISTRATION OF RADIATION MACHINES

RH-20. Reportable Sources of Radiation. The following constitute reportable sources of radiation:

Radiation machines, except when not installed in such manner as to be capable of producing radiation.

RH-21. Initial Registration. Every person who possesses a reportable source of radiation on January 1, 1963 shall register with the Department prior to April 1, 1963. Every person not already registered who acquires possession of a reportable source of radiation subsequent to January 1, 1963 shall register with the Department within thirty (30) days of the date of acquisition.

RH-22. Renewal of Registration. Every person possessing a registered source of radiation shall renew such registration with the Department during December of each year for the following year, as long as the activity requiring such registration continues and at such other times as the Department shall deem necessary.

RH-23. Registration Form. Registration and renewal shall be made on forms furnished by the Department. The registration or renewal of registration shall set forth all applicable information called for by the form.

RH-24. Separate Installations. Every person who registers shall complete a separate registration form for each installation.

RH-25. Special Registration. If the reporting of each installation or other information called for is impractical, the Department, upon the request of a registrant, may approve registration in such special form as the Department may prescribe.

RH-26. Report of Change. Within ten (10) days of change, the registrant shall report in writing to the Department any change in the name or address of the registrant or location of the installation, receipt, sale or disposal of any reportable source of radiation. In the case of disposition of the machine, such notification should specify the recipient of the machine.

RH-27. Report of Discontinuance. Every registrant who permanently discontinues the use of or permanently disposes of, all his reportable sources of radiation at an installation, shall notify the Department within ten (10) days of such action.

RH-28. Deleted.

RH-29. Reserved.

PART D.
REGISTRATION OF VENDOR SERVICES

RH-30. Purpose and Scope. This Part provides for the registration of persons providing radiation machine installation, servicing and/or vendor services to licensees or registrants.

RH-31. Installers of Radiation Machines. Each individual who is engaged in the business of installing or offering to install radiation machines, or is engaged in the business of furnishing or offering to furnish radiation machine servicing or services in this state to a Department registrant, shall apply for registration of such services with the Department on July 1, 1983 or thereafter, prior to furnishing or offering to furnish any such services.

RH-32. Registration Form. Registration and renewal shall be completed on forms furnished by the Department and shall contain all information required by the Department as indicated on the forms and accompanying instructions.

RH-33. Training. Each person applying for registration under this Part shall specify the training and experience that qualify the individual to discharge the services for which the individual is applying for registration.

RH-34. Services. Each registrant described in this Part shall not provide the services until such persons provide evidence that they have been registered with the Department. For the purpose of this Part, services may include but shall not be limited to:

a. Installation or servicing of radiation machines and associated radiation machine components.

b. Installation or servicing of devices containing radioactive material.

c. Consulting services including surveys, and evaluation of Naturally Occurring Radioactive Material (NORM) sites or material.

d. Calibration of radiation machines or radiation measurement instruments or devices.

e. Leak tests and leak test analysis.

Procedures must be submitted to this Department on how the test is performed and how the analysis is performed at the time of application.

RH-34. (Cont'd)

f. Providing training to licensee or registrant personnel. Training outline must be submitted to the Department at the time of application. Training includes but is not limited to:

1. Safe use and handling of X-ray equipment.

2. Safe use and handling of radioactive material.

3. Safe use and handling of Naturally Occurring Radioactive Material (NORM).

4. Training provided to Radiation Safety/Protection Officer.

g. Personnel Dosimetry Services.

1. Any individual offering or furnishing personnel dosimetry services to a Department licensee or registrant shall report each year to the Department all radiation exposure levels greater than limits set forth in RH-1200.a., within ten (10) days after the start of the next reporting period. This report shall include but is not limited to:

A. Name of exposed individual.

B. Name and address of the registrant or licensee employing the individual.

C. Amount of the exposure.

D. Monitoring year exposed.

2. Any individual offering or furnishing personnel dosimetry services shall not lower or amend radiation exposure reports except by authorization from the Department.

3. Any individual offering or furnishing personnel dosimetry services shall comply with all additional requirements of quality assurance and control of personnel dosimetry, as deemed appropriate and necessary by the Department.

RH-35. <u>Assembler and/or Transfer Requirement.</u>

a. Any person who sells, leases, transfers, lends, disposes, assembles or installs radiation machines in this state shall notify the Department within fifteen (15) days of:

1. The name and address of persons who have received these machines;

RH-35. (Cont'd)

2. The manufacturer, model and serial number of each radiation machine transferred; and

3. The date of transfer of each radiation machine.

b. In the case of diagnostic x-ray systems which contain certified components, a copy of the assembler's report prepared in compliance with requirements of the Federal diagnostic x-ray standard (21 CFR 1020.30[d]) shall be submitted to the Department with fifteen (15) days following completion of the assembly. Such report shall suffice in lieu of any other report by the assembler.

c. No person shall make, sell, lease, transfer, lend, assemble or install radiation machines or the supplies used in connection with such machines unless such supplies and equipment when properly placed in operation and used shall meet the requirements of these Regulations.

RH-36.- RH-39. Reserved.

PART E.
EXCLUSIONS FROM REGISTRATION

RH-40. Excluded Material and Devices. The following materials and devices do not require registration:

a. Domestic television receivers, providing the dose rate at 5 cm from any outer surface of 10 cm^2 area is less than 0.5 mrem per hour.

b. Other electrical equipment that produces radiation incidental to its operation from other purposes, providing the dose rate to the whole body at the point of nearest approach to such equipment when any external shielding is removed does not exceed 0.5 rem per year. The production testing or factory servicing of such equipment shall not be exempt.

c. Radiation machines while in transit or storage incident thereto.

RH-41. Excluded Possessors. Common and contract carriers are exempt from the requirement to register to the extent that they transport or store reportable sources of radiation in the regular course of their carriage for another or storage incident thereto.

RH-42.- RH-49. Reserved.

PART F.
INSPECTION, EXEMPTIONS AND ADDITIONAL REQUIREMENTS

RH-50. Radiation Protection Standards. Any person possessing a radiation machine that is a reportable source of radiation or who provides radiation machine installations and/or services shall be subject to the requirements of Section 3 of these Regulations (Radiation Protection Standards).

RH-51. Records to be Maintained. Each person who possesses a reportable source of radiation shall keep records showing the receipt (for any source received after January 1, 1963), transfer or disposal of such source of radiation. Additional record requirements are specified elsewhere in these Regulations.

RH-52. Access to Premises. The Department or its duly authorized representatives shall for reasonable cause have the power to enter at all reasonable times upon any private or public property for the purpose of determining whether or not there is compliance with or violation of the provisions of these rules and regulation, except that entry into areas under the jurisdiction of the federal government shall be effected only with the concurrence of the federal government or its duly designated representative.

RH-53. Access to Records. Each registrant shall, upon reasonable notice, make available for inspection by the Department records kept by the registrant pertaining to his receipt, possession, use, transfer or disposal of sources of radiation.

RH-54. Tests. Upon instruction from the Department, each registrant shall perform or cause to have performed and shall permit the Department to perform, such reasonable tests as the Department deems appropriate or necessary in the administration of the regulation, including, but not limited to, tests of:

a. Sources of radiation.

b. Facilities wherein sources of radiation are used or stored.

c. Radiation detection and monitoring instruments.

d. Other equipment and devices used in connection with utilization or storage of registered sources of radiation.

RH-55. Exemptions.

a. The Department may, upon application therefore, or upon its own initiative, grant such exemptions or exceptions from the requirements of these Regulations as it determines are authorized by law and will not result in undue hazard to public health and safety or property.

b. U.S. Department of Energy Contractors and U.S. Nuclear Regulatory Commission Contractors. Any U.S. Department of Energy contractor or subcontractor and any U.S. Nuclear Regulatory Commission contractor or subcontractor of the following categories operating within this state is exempt from these Regulations to the extent that such contractor or subcontractor under his contract receives, possesses, uses, transfers or acquires sources of radiation:

1. Prime contractors performing work for the U.S. Department of Energy at U.S. Government-owned or controlled sites, including the transportation of sources of radiation to or from such sites and the performance of contract services during temporary interruptions of such transportation;

2. Any other prime contractor or subcontractor of the U.S. Department of Energy or of the U.S. Nuclear Regulatory Commission when the Department and the U.S. Nuclear Regulatory Commission jointly determine:

i. that the exemption of the prime contractor or subcontractor is authorized by law; and

ii. that under the terms of the contract or sub-contract, there is adequate assurance that the work thereunder can be accomplished without undue risk to the public health and safety.

RH-56. Additional Requirements. The Department may, by rule, regulation or order, impose upon any registrant such requirements in addition to those established in this Regulation as it deems appropriate or necessary to minimize danger to public health and safety or property.

RH-57. Out-of-State Registration. Whenever any radiation machine is brought into the state for any temporary use, the persons proposing to bring such a machine into the state shall give written notice to the Department at least two (2) days before such a machine enters the state. The notice shall include the type of radiation machine; the nature, duration and scope of use; and the exact location where the radiation machine is to be used and state(s) in which this machine is registered. If for a specific case, the two (2) day period would impose an undue hardship on the person, upon application to the Department, permission to proceed sooner may be granted. In addition, the out-of-state person must:

RH-57. (Cont'd)

a. Comply with all applicable regulations of the Department; and

b. Supply the Department with such other information as the Department may reasonably request.

RH-58. Registration Fees

In accordance with Act 796 of 1995 - Codified as Arkansas Code of 1987 Annotated, 20-21-217, annual fees for registration shall be paid. Nonpayment of fees shall result in escalated enforcement action and/or revocation of registration.

RH-59. Reserved.

PART G.
PROHIBITED USES

RH-60. Hand-held Fluoroscopic Screens Prohibited. No hand-held fluoroscopic screen shall be used.

RH-61. X-Ray Shoe-Fitting Equipment.

a. X-Ray Shoe-Fitting Equipment Prohibited. No shoe-fitting device or shoe-fitting machine which uses fluoroscopic, x-ray or radiation principles shall be operated or maintained in this state.

b. Penalty for Use of X-ray Shoe-Fitting Machine. Any person violating the provisions of these Regulations shall be guilty of a misdemeanor and upon conviction shall be punished by a fine of not less than fifty dollars ($50.00) and not more than five hundred dollars ($500.00), and each day that such violation shall continue shall constitute a separate offense.

RH-62.-
RH-69. Reserved.

PART H.
ENFORCEMENT

RH-70. Violations.

a. Any person who violates any of the provisions of the Act or rules, regulations or orders in effect pursuant thereto of the Department shall, upon conviction thereof, be punished by a fine of not less than One Hundred Dollars ($100.00) nor more than Two Thousand Dollars ($2,000.00), or by imprisonment for not more than six (6) months or be both fined and imprisoned.

b. Impounding. Sources of radiation shall be subject to impounding pursuant to Section 5 of these Regulations.

RH-71.-RH-99. Reserved.

SECTION 2.
LICENSING OF RADIOACTIVE MATERIALS

(FOOTNOTES APPEAR AT THE END OF THIS SECTION)

PART A. GENERAL

RH-100. Authority. Act 8 of Second Extraordinary Special Session of 1961, as amended.

RH-101. Effective Date. The provisions of these Regulations shall become operative on the effective date of an agreement executed by the State of Arkansas and the Federal Government under the provisions of Section 274 of the Atomic Energy Act of 1954, as amended (73 STAT. 689).

RH-102. License Requirement.

a. No person shall receive, possess, use, transfer, own or acquire radioactive material except as authorized in a specific or general license issued pursuant to these Regulations or as otherwise provided in these Regulations. However, nothing in these Regulations shall apply to any person to the extent such person is subject to regulation by the U.S. Nuclear Regulatory Commission.[1/]

b. In addition to the requirements of this Part, all licensees, except as otherwise noted in these Regulations, are subject to the requirements of Section 3 of these Regulations.

RH-103. License Fee. In accordance with Act 796 of 1995, annual fees for licensing shall be paid. Nonpayment of fees shall result in escalated enforcement action and/or revocation of license.

RH-104. Communications. All communications concerning these Regulations shall be addressed to the Division of Radiation Control and Emergency Management, Arkansas Department of Health, 4815 West Markham, Slot 30, Little Rock, Arkansas 72205-3867.

RH-105.-
RH-199. Reserved.

PART B.
DEFINITIONS

RH-200. General Definitions as used in these Regulations: Additional definitions used in a certain part will be found in that part.

a. Accelerator-produced material - Any material made radioactive by a particle accelerator.

b. Act - Act 8 of Second Extraordinary Special Session of 1961, as amended.

c. Active maintenance - Any significant remedial activity needed during the period of institutional control to maintain a reasonable assurance that the performance objectives in RH-407.c.2 and 3 are met. Such active maintenance includes ongoing activities such as the pumping and treatment of water from a disposal unit or one-time measures such as replacement of a disposal unit cover. Active maintenance does not include custodial activities such as repair of fencing, repair or replacement of monitoring equipment, revegetation, minor additions to soil cover, minor repair of disposal unit covers and general disposal site upkeep such as mowing grass.

d. Agreement State - Any state with which the U.S. Nuclear Regulatory Commission has entered into an effective agreement under Section 274 b. of the Atomic Energy Act of 1954, as amended (73 STAT. 689).

e. Alert - Events may occur, are in progress, or have occurred that could lead to a release of radioactive material but that the release is not expected to require a response by offsite response organizations to protect persons offsite.

f. Authorized nuclear pharmacist - A pharmacist who is:

1. Board certified as a nuclear pharmacist by the Board of Pharmaceutical Specialties; or

2. Identified as an authorized nuclear pharmacist on a Department, U.S. Nuclear Regulatory Commission, or other Agreement State license that authorizes the use of radioactive material in the practice of nuclear pharmacy; or

3. Identified as an authorized nuclear pharmacist on a permit issued by the Department, the U.S. Nuclear Regulatory Commission, or other Agreement State specific license of broad scope that is authorized to permit the use of radioactive material in the practice of nuclear pharmacy.

g. Authorized user - A physician, dentist, or podiatrist who is:

1. Board certified by at least one of the Boards listed in:

A. Nuclear medicine by the American Board of Nuclear Medicine; or

B. Diagnostic radiology by the American Board of Radiology; or

C. Diagnostic radiology or radiology by the American Osteopathic Board of Radiology; or

D. Radiology or therapeutic radiology by the American Board of Radiology; or

E. Radiation oncology by the American Osteopathic Board of Radiology; or

F. Radiology, with specialization in radiotherapy, as a British "Fellow of the Faculty of Radiology" or "Fellow of the Royal College of Radiology"; or

G. Therapeutic radiology by the Canadian Royal College or Physicians and Surgeons; or

2. Identified as an authorized user on a Department, U.S. Nuclear Regulatory Commission, or other Agreement State license that authorizes the medical use of radioactive material; or

3. Identified as an authorized user on a permit issued by the Department, the U.S. Nuclear Regulatory Commission, or other Agreement State specific license of broad scope that is authorized to permit the medical use of radioactive material.

h. Buffer Zone - A portion of the disposal site that is controlled by the licensee and that lies under the disposal units and between the disposal units and the boundary of the site.

i Byproduct material - Any radioactive material (except special nuclear material) yielded in or made radioactive by exposure to the radiation incident to the process of producing or utilizing special nuclear material.

j. CFR - Code of Federal Regulations.

k. Chelating agent - Amine polycarboxylic acids (e.g., EDTA, DTPA), hydroxycarboxylic acids and polycarboxylic acids (e.g., citric acid, carbolic acid and glucinic acid).

l. Commencement of construction - Any clearing of land, excavation or other substantial action that would adversely affect the environment of a land disposal facility. The term does not mean disposal site exploration, necessary roads for disposal site exploration, borings to determine foundation conditions or other pre-construction monitoring or testing to establish background information related to the suitability of the disposal site or the protection of environmental values.

m. Custodial Agency - An agency of the government designated to act on behalf of the government owner of the disposal site.

n. Department - Arkansas Department of Health.

o. Depleted Uranium - The source material Uranium in which the isotope Uranium-235 is less than 0.711 weight percent of the total Uranium present. Depleted Uranium does not include special nuclear material.

p. Disposal - The isolation of radioactive wastes from the biosphere inhabited by man and containing his food chains by emplacement in a land disposal facility.

q. Disposal site - That portion of a land disposal facility which is used for disposal of waste. It consists of disposal units and a buffer zone.

r. Disposal unit - A discrete portion of the disposal site into which waste is placed for disposal. For near surface disposal the unit is usually a trench.

s. Effective Dose Equivalent - The sum of the products of the dose equivalent to the organ or tissue and the weighting factors applicable to each of the body organs or tissues that are irradiated. Weighting factors are: 0.25 for gonads, 0.15 for breast, 0.12 for red bone marrow, 0.12 for lungs, 0.03 for thyroid, 0.03 for bone surface, and 0.06 for each of the other five organs receiving the highest dose equivalent.

t. Engineered barrier - A man-made structure or device that is intended to improve the land disposal facility's ability to meet the performance objectives in RH-407.c.

u. Explosive material - Any chemical compound, mixture or device, which produces a substantial instantaneous release of gas and heat spontaneously or by contact with sparks or flame.

v. Hazardous waste - Those wastes designated as hazardous by Environmental Protection Agency regulations in 40 CFR Part 261.

w. Human use - The internal or external administration of radiation or radioactive materials to human beings.

x. Hydrogeologic unit - Any soil or rock unit or zone which by virtue of its porosity or permeability or lack thereof, has a distinct influence on the storage or movement of ground water.

y. Inadvertent intruder - A person who might occupy the disposal site after closure and engage in normal activities, such as agriculture, dwelling construction or other pursuits in which the person might be unknowingly exposed to radiation from the waste.

z. Individual - Any human being.

aa. Inspection - An official examination or observation including but not limited to, tests, surveys and monitoring to determine compliance with rules, regulations, orders, requirements and conditions of the Department.

ab. Intruder barrier - A sufficient depth of cover over the waste that inhibits contact with waste and helps to ensure that radiation exposures to an inadvertent intruder will meet the performance objectives set forth in this Part or engineered structures that provides equivalent protection to the inadvertent intruder.

ac. Land disposal facility - The land, buildings and equipment which are intended to be used for the disposal of the radioactive wastes into the subsurface of the land. For purposes of this Section, a geologic repository is not considered a land disposal facility.

ad. License - Except where otherwise specified, a license issued pursuant to these Regulations.

ae. Licensee - Any person who is licensed by the Department in accordance with these Regulations and the Act.

af. Licensing State - Any state with regulations equivalent to the Suggested State Regulations for Control of Radiation relating to, and an effective program for, the regulatory control of Naturally-Occurring and Accelerator-Produced Radioactive Material (NARM).

ag. Monitoring - Observing and making measurements to provide data to evaluate the performance and characteristics of the disposal site.

ah. Near-surface disposal facility - A land disposal facility in which radioactive waste is disposed of in or within the upper 30 meters of the earth's surface.

ai. Person - Any individual, corporation, partnership, firm, agency, political subdivision of this state, any other state or political subdivision or agency thereof and any legal successor, representative, agent or agency of the foregoing, other than the U.S. Nuclear Regulatory Commission and other federal government agencies.

aj. Pharmacist - An individual registered by this State to compound and dispense drugs, prescriptions and poisons.

ak. Physician - Any individual possessing a valid physician's and surgeon's certificate issued by this state.

al. Pyrophoric liquid - Any liquid that ignites spontaneously in dry or moist air at or below 130^0 F (54.5^0 C). A pyrophoric solid is any solid material, other than one classed as an explosive, which under normal conditions is liable to cause fires through friction, retained heat from manufacturing or processing or which can be ignited readily and when ignited, burns so vigorously and persistently as to create a serious transportation, handling or disposal hazard. Included are spontaneously combustible and water-reactive materials.

am. Radiation - Ionizing radiation, i.e., gamma rays and x-rays, alpha and beta particles, high speed electrons, neutrons and other nuclear particles; but not sound, radio waves, visible, infrared or ultraviolet light.

an. Radioactive material - Any material, solid, liquid or gas which emits radiation spontaneously, including any natural radioactive material such as radium.

ao. Radiographer - Any individual who performs or who, in attendance at the site where sources of radiation are being used, personally supervises industrial radiographic operations and who is responsible to the licensee or registrant for assuring compliance with the requirements of these Regulations and the conditions of registration or of a license.

ap. Radiographer's Assistant - Any individual who, under the personal supervision of a radiographer, uses sources of radiation, related handling tools or survey instruments in industrial radiography.

aq. Radiographic exposure device - Any instrument containing a sealed source fastened or contained therein, in which the sealed source or shielding thereof may be moved or otherwise changed, from a shielded to unshielded position for purposes of making a radiographic exposure.

ar. Radiography - The examination of the macroscopic structure of materials by nondestructive methods utilizing sources of radiation.

as. Registrant - Any person who is registered with Department and is legally obligated to register with the Department pursuant to these Regulations and the Act.

at. Registration - Registration with the Department in accordance with these Regulations adopted by the Department.

au. Research and Development -

1. Theoretical analysis, exploration or experimentation; or

2. The extension of investigative findings and theories of a scientific or technical nature into practical application for experimental and demonstration purposes, including the experimental production and testing of models, devices, equipment, material and processes.

Research and Development used in these Regulations does not include the internal or external administration of radiation or radioactive material to human beings.

av. Sealed Source - Radioactive material that is permanently bonded or fixed in a capsule or matrix designed to prevent release and dispersal of the radioactive material under the most severe conditions which are likely to be encountered in normal use and handling.

aw. Site Area Emergency - Events may occur, are in progress, or have occurred that could lead to a significant release of radioactive material and that could require a response by offsite response organizations to protect persons offsite.

ax. Site closure and stabilization - Those actions that are taken upon completion of operations that prepare the disposal site for custodial care and assure that the disposal site will remain stable and will not need ongoing active maintenance.

ay. Source Material -

1. Uranium or Thorium or any combination thereof in any physical or chemical form, or

2. Ores which contain by weight one-twentieth of one percent (0.05 percent) or more of (A) Uranium, (B) Thorium or (C) any combination thereof.

Source material does not include special nuclear material.

az. Source of radiation - Any radioactive material, device or equipment emitting or capable of producing radiation.

ba. Special nuclear material in quantities not sufficient to form a critical mass - Uranium enriched in the isotope 235 in quantities not exceeding 350 grams of contained Uranium-235; Uranium-233 in quantities not exceeding 200 grams; Plutonium in quantities not exceeding 200 grams or any combination of them in accordance with the following formula: For each kind of special nuclear material, determine the ratio between the quantity of that special nuclear material and the quantity specified above for the same kind of special nuclear material. The sum of such ratios for all of the kinds of special nuclear material in combination shall not exceed "1" (i.e., unity). For example, the following quantities in combination would not exceed the limitation and are within the formula, as follows:

$$\frac{175 \text{ (grams contained U-235)}}{350} + \frac{50 \text{ (grams U-233)}}{200} + \frac{50 \text{ (grams Pu)}}{200} = 1$$

bb. Stability - Structural stability.

bc. Surveillance - Observation of the disposal site for purposes of visual detection of need for maintenance, custodial care, evidence of intrusion and compliance with other license and regulatory requirements.

bd. These Regulations - The Arkansas State Board of Health Rules and Regulations for Control of Sources of Ionizing Radiation, Section 2.

be. Unrefined and Unprocessed Ore - Ore in its natural form prior to any processing, such as grinding, roasting, beneficiating or refining.

bf. U.S. Department of Energy - The Department of Energy established by Public Law 95-91, August 4, 1977, 91 Stat. 565, 42 U.S.C. 7101 et seq., to the extent that the Department exercises functions formerly vested in the U.S. Atomic Energy Commission, its Chairman, members, officers and components and transferred to the U.S. Energy Research and Development Administration and to the Administrator thereof pursuant to Sections 104(b), (c) and (d) of the Energy Reorganization Act of 1974 (Public Law 93-438, October 11, 1974, 88 Stat. 1233 at 1237, effective January 19, 1975) and retransferred to the Secretary of Energy pursuant to Section 301(a) of the Department of Energy Organization Act (Public Law 95-91, August 4, 1977, 91 Stat. 565 at 577-578, 42 U.S.C. 7151, effective October 1, 1977.)

RH-200 (Cont'd)

bg. Waste - Those low-level radioactive wastes containing source, special nuclear or byproduct material that are acceptable for disposal in a land disposal facility. For the purposes of this definition, low-level waste has the same meaning as in the Federal Low-Level Waste Policy Act that is radioactive waste not classified as high-level radioactive waste, transuranic waste, spent nuclear fuel, or byproduct material as defined in Section 11e.(2) of the Atomic Energy Act (Uranium or Thorium tailings and waste).

bh. Waste handling licensees - Persons licensed to receive and store radioactive wastes prior to disposal and/or persons licensed to dispose of radioactive waste.

RH-201.-
RH-299. Reserved.

PART C.
EXEMPTIONS

RH-300. Source Material.

a. Any person is exempt from these Regulations to the extent that such person receives, possesses, uses or transfers source material in any chemical mixture, compound, solution or alloy in which the source material is by weight less than 1/20 of 1 percent (0.05 percent) of the mixture, compound, solution or alloy.

b. Any person is exempt from this Regulation to the extent that such person receives, possesses, uses or transfers unrefined and unprocessed ore containing source material; provided that, except as authorized in a specific license, such person shall not refine or process such ore.

c. Any person is exempt from this regulation to the extent that such person receives, possesses, uses or transfers:

1. Any quantity of Thorium contained in:

A. Incandescent gas mantles; or

B. Vacuum tubes; or

C. Welding rods; or

D. Electric lamps for illuminating purposes provided that each lamp does not contain more than 50 milligrams of Thorium; or

E. Germicidal lamps, sunlamps and lamps for outdoor or industrial lighting provided that each lamp does not contain more than 2 grams of Thorium; or

F. Rare earth metals and compounds, mixtures and products containing not more than 0.25% by weight Thorium, Uranium or any combination of these.

G. Personnel neutron dosimeters; provided, that each dosimeter does not contain more than 50 milligrams of Thorium.

2. Source material contained in the following products:

A. Glazed ceramic tableware, provided that the glaze contains not more than twenty (20%) percent by weight source material;

B. Piezoelectric ceramic containing not more than two (2) percent by weight source material;

3. Photographic film, negatives and prints containing Uranium or Thorium;

4. Any finished product or part fabricated of or containing Tungsten or Magnesium-Thorium alloys; provided that the Thorium content of the alloy does not exceed four (4) percent by weight and that the exemption contained in this Subparagraph shall not be deemed to authorize the chemical, physical or metallurgical treatment or processing of any such product or part; and

5. Uranium contained in counterweights installed in rockets, projectiles and missiles or stored or handled in connection with installation or removal of such counterweights; provided that:

A. The counterweights are manufactured in accordance with a specific license issued by the Department, the U.S. Nuclear Regulatory Commission or any Agreement State authorizing distribution by the licensee pursuant to this Subparagraph or equivalent regulations of the NRC or any Agreement State;

B. Each counterweight has been impressed with the following legend clearly legible through any plating or other covering:
"DEPLETED URANIUM;"[2/]

C. Each counterweight is durably and legibly labeled or marked with the identification of the manufacturer and the statement:
"UNAUTHORIZED ALTERATIONS PROHIBITED;"[2/] and

D. The exemption contained in this Subparagraph shall not be deemed to authorize the chemical, physical or metallurgical treatment or processing of any such counterweights other than repair or restoration of any plating or other covering.

6. Uranium used as shielding constituting part of any shipping container which is conspicuously and legibly impressed with the legend **"CAUTION - RADIOACTIVE SHIELDING - URANIUM"** and which meets the specifications for containers for radioactive materials prescribed by Section 173.394 or 173.395 of 49 CFR Part 173, of the regulations published by the U.S. Department of Transportation.

7. Thorium contained in finished optical lenses, provided that each lens does not contain more than 30 percent by weight of Thorium; and that the exemption contained in this Subparagraph shall not be deemed to authorize either:

   A. The shaping, grinding or polishing of such lens or manufacturing processes other than the assembly of such lens into optical systems and devices without any alteration of the lens; or

   B. The receipt, possession, use or transfer of Thorium contained in contact lenses or in spectacles or in eyepieces in binoculars or other optical instruments.

8. Uranium contained in detector heads for use in fire detection units, provided that each detector head contains not more than 0.005 microcurie of Uranium.

9. Thorium contained in any finished aircraft engine part containing nickel-thoria alloy, provided that:

   A. The Thorium is dispersed in the nickel-thoria alloy in the form of finely divided thoria (Thorium Dioxide); and

   B. The Thorium content in the nickel-thoria alloy does not exceed 4 percent by weight.

d. The exemption contained in RH-300.c shall not be deemed to authorize manufacture, processing or production of any of the products described herein.

RH-301. Other Radioactive Materials.

a. Exempt concentrations.

1. Except as provided in RH-301.a.2 below, any person is exempt from this Part to the extent that such person receives, possesses, uses, transfers, owns or acquires products materials containing radioactive material in concentrations not in excess of those listed in Part I, RH-902, Schedule C.

2. No person may introduce radioactive material into a product or material knowing or having reason to believe that it will be transferred to persons exempt under RH-301.a.1 or equivalent regulations of the U.S. Nuclear Regulatory Commission or any Agreement State, except in accordance with a license issued pursuant to RH-405.g or the general license provided in RH-402 of this Section.

b. Certain items containing radioactive material. Except for persons who apply radioactive material to or persons who incorporate radioactive material into, the following products, any person is exempt from these Regulations to the extent that he receives, possesses, uses, transfers, owns or acquires the following products.[3/]

1. Time pieces or hands or dials containing Radium or not more than the following specified quantities of radioactive material and not exceeding the following specified levels of radiation:

A. 25 millicuries of Tritium per timepiece;

B. 5 millicuries of Tritium per hand;

C. 15 millicuries of Tritium per dial (bezels when used shall be considered as part of the dial);

D. 100 microcuries of Promethium-147 per watch or 200 microcuries of Promethium-147 per other timepiece hand;

E. 20 microcuries of Promethium-147 per watch hand or 40 microcuries of Promethium-147 per other timepiece hand;

F. 60 microcuries of Promethium-147 per watch dial or 120 microcuries of Promethium-147 per other timepiece dial (bezels when used shall be considered as part of the dial);

G. The levels of radiation from hands and dials containing Promethium-147 will not exceed, when measured through 50 milligrams per square centimeter of absorber:

i. For wrist watches, 0.1 millirad per hour at 10 centimeters from any surface;

ii. For any other timepiece, 0.1 millirad per hour at 1 centimeter from any surface;

iii. For any other timepiece, 0.2 millirad per hour at 10 centimeters from any surface.

2. Lock illuminators containing not more than 15 millicuries of Tritium or not more than 2 millicuries of Promethium-147 installed in automobile locks. The levels of radiation from each lock illuminator containing Promethium-147 will not exceed 1 millirad per hour at 1 centimeter from any surface when measured through 50 milligrams per square centimeter of absorber.

3. Balances of precision containing not more than 1 millicuries of Tritium per balance or not more than 0.5 millicurie of Tritium per balance part.

4. Automobile shift quadrants containing not more than 25 millicuries of Tritium.

5. Marine compasses containing not more than 750 millicuries of Tritium gas and other marine navigational instruments containing not more than 250 millicuries of Tritium gas.

6. Thermostat dials and pointers containing not more than 25 millicuries of Tritium per thermostat.

7. Electron tubes: Provided, that each tube does not contain more than one of the following specified quantities of radioactive material:

   A. 150 millicuries of Tritium per microwave receiver protector tube or 10 millicuries of Tritium per any electron tube;

   B. 1 microcurie of Cobalt-60;

   C. 5 microcuries of Nickel-63;

   D. 30 microcuries of Krypton-85;

   E. 5 microcuries of Cesium-137;

   F. 30 microcuries of Promethium-147;

   And provided further, that the level of radiation due to radioactive material contained in each electron tube does not exceed 1 millirad per hour at 1 centimeter from any surface when measured through 7 milligrams per square centimeter of absorber.[4/]

8. Spark gap irradiators containing not more than 1 microcurie of Cobalt-60 per spark gap irradiator for use in electrically ignited fuel oil burners having a firing rate of at least 3 gallons per hour (11.4 liters per hour).

9. Ionizing radiation measuring instruments containing, for purposes of internal calibration or standardization, one or more sources of radioactive material; provided that:

   A. Each source contains no more than one exempt quantity set forth in Schedule B, and

   B. Each instrument contains no more than ten (10) exempt quantities. For purposes of RH-301.b.9, an instrument's source(s) may contain either one type or different types of radionuclides and an individual exempt quantity may be composed of fractional parts of one or more of the exempt quantities in Schedule B, provided that the sum of each fractions shall not exceed unity.

   C. For purposes of this RH-301.b.9, 0.05 microcurie of Americium-241 is considered an exempt quantity under Schedule B.

c. Resins containing Scandium-46 and designed for sand consolidation in oil wells. Any person is exempt from these Regulations to the extent that such person receives, possesses, uses, transfers, owns or acquires synthetic plastic resins containing Scandium-46 which are designed for sand consolidation in oil wells. Such resins shall have been manufactured or imported in accordance with a specific license issued by the U.S. Nuclear Regulatory Commission or shall have been manufactured in accordance with the specifications contained in a specific license or equivalent licensing document issued by the Department or any Agreement State to the manufacturer of such resins pursuant to licensing requirements equivalent to those in Section 32.16 and 32.17 of 10 CFR Part 32 of the regulations of the Nuclear Regulatory Commission. This exemption does not authorize the manufacture of any resins containing Scandium-46.

d. Gas and aerosol detectors containing radioactive material.

   1. Except for persons who manufacture, process or produce gas and aerosol detectors containing radioactive material, any person is exempt from these Regulations to the extent such person receives, possesses, uses, transfers, owns or acquires byproduct material in gas and aerosol detectors designed to protect life or property from fires and airborne hazards provided that detectors containing radioactive material shall have been manufactured, imported or transferred in accordance with a specific license issued by the U.S. Nuclear Regulatory Commission[5/] pursuant to Section 32.26 of 10 CFR Part 32, or any Agreement State, which license authorizes the transfer of the detectors to persons who are exempt from regulatory requirements.

2. Gas and aerosol detectors previously manufactured and distributed to general licensees in accordance with a specific license issued by an Agreement State shall be considered exempt under RH-301.d.1, provided that the device is labeled in accordance with the specific license authorizing distribution of the generally licensed device and provided further that they meet the requirements of RH-405.g.

3. Gas and aerosol detectors containing Naturally Occurring Radioactive Material (NORM) previously manufactured and distributed in accordance with a specific license issued by a Licensing State shall be considered exempt under RH-301.d.A, provided that the device is labeled in accordance with the specific license authorizing distribution and provided further that they

e. Self-luminous products containing Tritium, Krypton-85 or Promethium-147. Except for persons who manufacture, process or produce self-luminous products containing Tritium, Krypton-85 or Promethium-147, any person is exempt from these Regulations to the extent that such person receives, possesses, uses, transfers, owns or acquires Tritium, Krypton-85 or Promethium-147 in self-luminous products manufactured, processed, produced, imported or transferred in accordance with a specific license issued by the U.S. Nuclear Regulatory Commission pursuant to Section 32.22 of 10 CFR 32 which authorizes the transfer of the product to persons who are exempt from regulatory requirements. The exemption in this Paragraph e does not apply to Tritium, Krypton-85 or Promethium-147 used in products for frivolous purposes or in toys or adornments.

f. 1. Radioactive drug: Capsules containing carbon-14 urea for "in vivo" diagnostic use for humans. Except as provided in paragraphs RH-301.f.2. and RH-301.f.3., any person is exempt from the requirements for a license set forth in Section 5(c) of the Atomic Energy Act of 1954, as amended and from the regulations in this Section provided that such person receives, possesses, uses, transfers, owns, or acquires capsules containing one (1) microcurie (37 kBq) carbon-14 urea (allowing for nominal variation that may occur during the manufacturing process) each, for "in vivo" diagnostic use for humans.

2. Any person who desires to use the capsules for research involving human subjects shall apply for and receive a specific license pursuant to this Section.

3. Any person who desires to manufacture, prepare, process, produce, package, repackage, or transfer for commercial distribution such capsules shall apply for and receive specific license pursuant to RH-405.o.

RH-301. (Cont'd)

4. Nothing in this Section relieves persons from complying with applicable Food & Drug Administration (FDA), other Federal, and State requirements governing receipt, administration, and use of drugs.

RH-302. Carriers. Common and contract carriers, freight forwarders and warehousemen operating within this state are exempt from these Regulations to the extent that they transport or store sources of radiation in the regular course of their carriage for another or storage incident thereto.

RH-303. U.S. Department of Energy Contractors and U.S. Nuclear Regulatory Commission Contractors. Any U.S. Department Energy (DOE) contractor or subcontractor and any U.S. Nuclear of Regulatory Commission (NRC) contractor or subcontractor of the following categories operating within this state is exempt from these Regulations to the extent that such contractor or subcontractor under his contract receives, possesses, uses, transfers or acquires sources of radiation:

a. Prime contractors performing work for the DOE at U.S. Government-owned or controlled sites, including the transportation of sources of radiation to or from such sites and the performance of contract services during temporary interruptions of such transportation;

b. Prime contractors of the DOE performing research in or development, manufacture, storage, testing or transportation of, atomic weapons or components thereof;

c. Prime contractors of the DOE using or operating nuclear reactors or other nuclear devices in a U.S. Government owned vehicle or vessel; and

d. Any other prime contractor or subcontractor of the DOE or of the NRC when the State and the NRC jointly determine

i. that the exemption of the prime contractor or subcontractor is authorized by law; and

ii. that under the terms of the contract of subcontract, there is adequate assurance that the work thereunder can be accomplished without undue risk to the public health and safety.

RH-304. Other Exemptions. The Department may, upon application therefore or upon its own initiative, grant such exemptions or exceptions from the requirements of these Regulations as it determines are authorized by law and will not result in undue hazard to public health and safety or property.

RH-305. Exempt Quantities.

a. Except as provided in Subparagraphs c and d of this Paragraph, any person is exempt from these Regulations to the extent that such person receives, possesses, uses, transfers, owns or acquires radioactive material in individual quantities each of which does not exceed the applicable quantity set forth in RH-901, Schedule B.

b. Any person who possesses radioactive material received or acquired under the general license formerly provided in RH-402.a is exempt from the requirements for a license set forth in this Part to the extent that such person possesses, uses, transfers or owns such radioactive material.

c. This RH-305 does not authorize the production, packaging or repackaging of radioactive material for purposes of commercial distribution or the incorporation of radioactive material into products intended for commercial distribution.

d. No person may, for purposes of commercial distribution, transfer radioactive material in the individual quantities set forth in Schedule B, knowing or having reason to believe that such quantities of radioactive material will be transferred to persons exempt under this Paragraph or equivalent regulations of the U.S. Nuclear Regulatory Commission or any Agreement State, except in accordance with a specific license issued by the U.S. Nuclear Regulatory Commission pursuant to Section 32.18 of 10 CFR Part 32 which license states that the radioactive material may be transferred by the licensee to persons exempt under this RH-305 or the equivalent regulations of the U.S. Nuclear Regulatory Commission or any Agreement State.[5/]

RH-306.-
RH-399. Reserved.

PART D.
LICENSES

RH-400. Types of Licensees. Licenses for radioactive materials are of two types: general and specific.

General Licenses provided in these Regulations are effective without the filing of an application with the Department or the issuance of licensing documents to particular persons.

Specific Licenses are issued to named persons upon application filed pursuant to these Regulations.

RH-401. General Licenses - Source Material.

a. A general license is hereby issued authorizing use and transfer of not more than fifteen (15) pounds of source material at any one time by persons in the following categories:

1. Pharmacists using the source material solely for the compounding of medicinals;

2. Physicians using the source material for medicinal purposes;

3. Persons receiving possession of source material from pharmacists and physicians in the form of medicinals or drugs;

4. Commercial and industrial firms and research, educational and medical institutions for research, development, educational or commercial purposes; and provided, that no person shall pursuant to this general license, receive more than a total of 150 pounds of source material in any one (1) calendar year.

b. Persons who receive, possess, use or transfer source material pursuant to the general license issued in RH-401.a are exempt from the provisions of Section 3 of these Regulations to the extent that such receipt, possession, use or transfer is within the terms of such general license. Provided, however, that this exemption shall not be deemed to apply to any such person who is also in possession of source material under a specific license issued pursuant to these Regulations.

c. A general license is hereby issued authorizing the receipt of title to source material without regard to quantity. This general license does not authorize any person to receive, possess, use or transfer source material.

RH-402. General Licenses - Other Radioactive Materials.

a. Certain Devices and Equipment. A general license is hereby issued to transfer, receive, acquire, own, possess and use radioactive material incorporated in a device or equipment which is listed in Part I, RH-900, Schedule A and has been manufactured pursuant to a specific license or equivalent licensing document, issued to the supplier by the Department, the U.S. Nuclear Regulatory Commission or any Agreement State and authorizing distribution under the general license of this Paragraph or its equivalent.

The general license provided in this RH-402.a is subject to the provision of RH-56, RH-60, RH-301.a.2, RH-409, RH-416, RH-500, RH-501, RH-600, RH-601, RH-602, RH-4012, Section 3[6/] and Section 4 of these Regulations.

b. 1. Certain Measuring, Gauging or Controlling Devices. A general license is hereby issued to commercial and industrial firms and to research, educational and medical institutions, individuals in the conduct of their business and state or local government agencies to own, receive, acquire, possess, use or transfer in accordance with the provisions of RH-402.b.2, 3, 4, radioactive material, excluding special nuclear material, contained in devices designed and manufactured for the purpose detecting, measuring, gauging or controlling of thickness, density, level, interface location, radiation, leakage or qualitative or quantitative chemical composition or for producing light or an ionized atmosphere.

2. The general license in RH-402.b.1 applies only to radioactive material contained in devices which have been manufactured and labeled in accordance with the specifications contained in a specific license issued by the Department, the U.S. Nuclear Regulatory Commission or an Agreement State which authorizes distribution of devices to persons generally licensed by the U.S. Nuclear Regulatory Commission or an Agreement State.

3. Any person who owns, receives, acquires, possesses, uses or transfers radioactive material in a device pursuant to the general license in RH-402.b.1:

A. Shall assure that all labels affixed to device at the time of receipt and bearing a the statement that removal of the label is prohibited are maintained thereon and shall comply with all instructions and precautions provided by such labels;

B. Shall assure that the device is tested for leakage of radioactive material and proper operations of the on-off mechanism and indicator, if any, at no longer than six-month intervals or at such other intervals as are specified in the label, however;

i. Devices containing only Krypton need not be tested for leakage of radioactive material, and

ii. Devices containing only Tritium or not more than 100 microcuries of other beta and/or gamma emitting material or 10 microcuries of alpha emitting material and devices held in storage in the original shipping container prior to initial installation, need not be tested for any purpose;

C. Shall assure that the tests required by RH-402.b.3.B and other testing, installation, servicing and removal from installation involving the radioactive materials, its shielding or containment, are performed;

i. In accordance with the instructions provided by the labels; or

ii. By a person holding a specific license from the Department, the U.S. Nuclear Regulatory Commission or an Agreement State to perform such activities;

D. Shall maintain records showing compliance with the requirements of RH-402.b.3.B and 3.C. The records shall show the results of tests. The records also shall show the dates of performance and the names of persons performing, testing, installation servicing and removal from installation concerning the radioactive material, its shielding or containment;

E. Upon the occurrence of a failure of or damage to, or any indication of a possible failure of or damage to, the shielding of the radioactive material or the on-off mechanism or indicator, or upon the detection of 0.005 microcurie or more removable radioactive material, shall immediately suspend operation of the device until it has been repaired by the manufacturer or

other person holding a specific license from the Department, the U.S. Nuclear Regulatory Commission or an Agreement State, to repair such devices or disposed of by transfer to a person authorized by a specific license to receive the radioactive material contained in the device and within thirty (30) days, furnish to the Department a report containing a brief description of the event and the remedial action taken;

F. Shall not abandon the device containing radioactive material;

G. Except as provided in RH-402.b.3.H, transfer or dispose of the device containing shall radioactive material only by transfer to a specific licensee of the Department, the U.S. Nuclear Regulatory Commission or an Agreement State, whose specific license authorizes him to receive the device and within thirty (30) days after transfer of a device to a specific licensee, shall furnish to the Department a report containing identification of the device by manufacturer's name and model number and the name and address of the person receiving the device. No report is required if the device is transferred to the specific licensee in order to obtain a replacement device;

H. Shall transfer the device to another general licensee only:

i. Where the device remains in use at a particular location. In such case the transferor shall give a transferee a copy of these Regulations and any safety documents identified in the label on the device and within thirty (30) days of the transfer, report to the Department the manufacturer's name and model number of device transferred, the name and address of the transferee and the name and/or position of an individual who may constitute a point of contact between the Department and the transferee; or

ii. Where the device is held in storage in the original shipping container at its intended location of use prior to initial use by a general licensee;

I. Shall comply with the provisions of RH-1501 and RH-1502 for reporting radiation incidents, theft or loss of licensed material, but shall be exempt from the other requirements of Section 3 of these Regulations.

4. The general license in RH-402.b.1 does not authorize the manufacture of devices containing radioactive material.

5. The general license provided in this Paragraph is subject to the provisions of RH-56, RH-60, RH-409, RH-416, RH-500, RH-501, RH-600, RH-601, RH-602, RH-4012 and Section 4.

c. 1. Luminous Safety Devices in Aircraft. A general license is hereby issued to own, receive, acquire, possess and use Tritium or Promethium-147 contained in luminous safety devices for use in aircraft, provided each device contains not more than ten (10) curies of Tritium or 300 millicuries of Promethium-147 and that each device has been manufactured, assembled or imported in accordance with a specific license issued by the U.S. Nuclear Regulatory Commission or each device has been manufactured or assembled in accordance with the specifications contained in a specific license or equivalent licensing document issued by the Department or any Agreement State to the manufacturer or assembler such device pursuant to licensing requirements of equivalent to those in Section 32.53 of CFR Part 32 of the Regulations of the U.S. Nuclear Regulatory Commission.

2. Persons who own, receive, acquire, possess or use luminous safety devices pursuant to the general license in RH-402.c.1 are exempt from the requirements of Section 3, except that they shall comply with the provisions of Section 3, Part F, RH-1501 and RH-1502.

3. This general license does not authorize the manufacture, assembly or repair of luminous safety devices containing Tritium or Promethium-147.

4. This general license does not authorize the ownership, receipt, acquisition, possession or use of Promethium-147 contained in instrument dials.

5. The general license provided in this Paragraph is subject to the provisions of RH-56, RH-60, RH-409, RH-416, RH-500, RH-501, RH-600, RH-601, RH-602, RH-4012 and Section 4.

RH-402. (Cont'd)

d. 1. Calibration and Reference Sources. A general license is hereby issued to those persons listed below to own, receive, acquire, possess, use and transfer, in accordance with provisions of Subparagraphs 4 and 5 of this Paragraph d, Americium-241 in the form of calibration or reference sources:

A. Any person who holds a specific license issued by the Department which authorizes him to receive, possess, use and transfer radioactive material; and

B. Any person who holds a specific license issued by the U.S. Nuclear Regulatory Commission which authorizes him to receive, possess, use and transfer special nuclear material.

2. A general license is hereby issued to receive possess, use and transfer Plutonium in the form of calibration or reference sources in accordance with the provisions of Subparagraphs 4 and 5 of this Paragraph d to any person who holds a specific license issued by the Department which authorizes him to receive, possess, use and transfer radioactive material.

3. A general license is hereby issued to own, receive, possess, use and transfer Radium-226 in the form of calibration or reference sources in accordance with the provisions of Subparagraphs 4 and 5 of this Paragraph d to any person who holds a specific license issued by the Department which authorizes him to receive, possess, use and transfer radioactive material.

4. The general licenses in Subparagraphs 1 and 2 of this Paragraph apply only to calibration or reference sources which have been manufactured in accordance with the specifications contained in a specific license issued to the manufacturer or importer of the sources by the U.S. Nuclear Regulatory Commission pursuant to Section 32.57 of 10 CFR Part 32 or Section 70.39 of 10 CFR Part 70 or which have been manufactured in accordance with the specifications contained in a specific license or equivalent licensing document issued to the manufacturer by the Department or any Agreement State pursuant to licensing requirements equivalent to those contained in Section 32.57 of 10 CFR Part 32 or Section 70.39 of 10 CFR Part 70 of the Regulations of the U.S. Nuclear Regulatory Commission.

5. The general licenses in Subparagraphs 1 and 2 of this Paragraph are subject to the provisions of RH-56, RH-60, RH-409, RH-416, RH-500, RH-501, RH-600, RH-601, RH-602, RH-4012, Section 3 and Section 4. In addition, persons who own, receive, acquire, possess, use and transfer one or more calibration or reference sources pursuant to these general licenses:

   A. Shall not possess at any one time, at any one location of storage or use, more than 5 microcuries of Americium-241 and 5 microcuries of Plutonium in such sources; or 5 microcuries of Radium-226 in such sources;

   B. Shall not receive, possess, use or transfer such source unless the source or the storage container bears a label which includes the following statement or a substantially similar statement which contains the information called for in the following statement:

      The receipt, possession, use and transfer of this source, Model _____, Serial No. _____, are subject to a general license and the regulations of the U.S. Nuclear Regulatory Commission or of a State with which the Commission has entered into an agreement for the exercise of regulatory authority. Do not remove this label.

      CAUTION -- RADIOACTIVE MATERIAL -- THIS SOURCE CONTAINS (AMERICIUM-241) (PLUTONIUM)*. DO NOT TOUCH RADIOACTIVE PORTION OF THIS SOURCE.

      _____
      (Name of Manufacturer or Importer);

   C. Shall not transfer, abandon or dispose of such source except by transfer to a person authorized by a license from the Department, the U.S. Nuclear Regulatory Commission or an Agreement State to receive the source;

   D. Shall store such source, except when the source is being used, in a closed contain eradequately designed and constructed to contain Americium-241, Plutonium or Radium-226 which might otherwise escape during storage; and

   E. Shall not use such source for any purpose other than the calibration of radiation detectors or the standardization of other sources.

6. These general licenses do not authorize the manufacture of calibration or reference sources containing Americium-241, Plutonium or Radium-226.

e. Ownership of Radioactive Material. A general license is hereby issued to own radioactive material without regard to quantity. Notwithstanding any other provisions of this Part, this general license does not authorize the manufacture, production, transfer, receipt, possession or use of radioactive material.

f. Ice Detection Devices.

1. A general license is hereby issued to own, receive acquire, possess, use and transfer Strontium-90, contained in ice detection devices, provided each device contains not more than 50 microcuries of Strontium-90 and each device has been manufactured or imported in accordance with a specific license issued by the U.S. Nuclear Regulatory Commission or each device has been manufactured in accordance with the specifications contained in a specific license or equivalent licensing document issued by the Department or any Agreement State to the manufacturer of such device pursuant to licensing requirements equivalent to those in Section 32.61 of 10 CFR Part 32 of the Regulations of the U.S. Nuclear Regulatory Commission.

2. Persons who own, receive, acquire, possess, use or transfer Strontium-90 contained in ice detection devices pursuant to the general license in Subparagraph 1 of this Paragraph f.

A. Shall, upon occurrence of visually observable damage, such as a bend or crack or discoloration from overheating, to the device, discontinue use of the device until it has been inspected, tested for leakage and repaired by a person holding a specific license or equivalent licensing document from the U.S. Nuclear Regulatory Commission or any Agreement State to manufacture or service such devices; or shall dispose of the device pursuant to the provisions of these Regulations;

B. Shall assure that all labels affixed to the device at the time of receipt and which bear a statement which prohibits removal of the labels, are maintained thereon;

C. Are exempt from the requirements of Section 3 except that such persons shall comply with the provisions of RH-1400, RH-1501 and RH-1502 of these Regulations.

3. This general license does not authorize the manufacture, assembly, disassembly or repair of Strontium-90 in ice detection devices.

4. The general license in this RH-402.f is subject to the provisions of RH-56, RH-60, RH-409, RH-416, RH-500, RH-501, RH-600, RH-601, RH-602, RH-4012 and Section 4.

g. Intrastate Transportation of Radioactive Material. A general license is hereby issued to any common or contract carrier to transport and store radioactive material in the regular course of their carriage for another or storage incident thereto, provided the transportation and storage is in accordance with the applicable requirements of these Regulations, appropriate to the mode of transport, of the U.S. Department of Transportation insofar as such regulations relate to the loading and storage of packages, placarding of the transporting vehicle and incident reporting.[7/] Persons who transport and store radioactive material pursuant to the general license in this Paragraph are exempt from the requirements of Section 3 of these Regulations.

h. General License for Use of Radioactive Material for Certain In Vitro Clinical or Laboratory Testing.[8/]

1. A general license is hereby issued to any physician, veterinarian, clinical laboratory or hospital to receive, acquire, possess, transfer or use, for any of the following stated tests, in accordance with the provisions of RH-402.h, 2, 3, 4, 5 and 6 of this Section, the following radioactive materials in prepackaged units:

A. Carbon-14, in units not exceeding 10 micro-curies each for use In Vitro clinical or laboratory tests not involving internal or external administration of radioactive material or the radiation therefrom, to human beings or animals.

B. Cobalt-57, in units not exceeding 10 micro-curies each for use in In Vitro clinical or laboratory tests not involving internal or external administration of radioactive material or the radiation therefrom, to human beings or animals.

C. Hydrogen-3 (Tritium), in units not exceeding 50 microcuries each for use in In Vitro clinical or laboratory tests not involving internal or external administration of radioactive material or the radiation therefrom, to human beings or animals.

D. Iodine-125 in units not exceeding 10 microcuries each for use in In Vitro clinical or laboratory tests not involving internal or external administration of radioactive material or the radiation therefrom, to human beings or animals.

E. Iodine-131, in units not exceeding 10 microcuries each for use in In Vitro clinical or laboratory tests not involving internal or external administration of radioactive material or the radiation therefrom, to human beings or animals.

F. Iron-59, in units not exceeding 20 microcuries each for use in In Vitro clinical or laboratory tests not involving internal or external administration of radioactive material or the radiation therefrom, to human beings or animals.

G. Mock Iodine-125 reference or calibration sources, in units not exceeding 0.05 microcurie of Iodine-129 and 0.005 microcurie of Americium-241 each for use in In Vitro clinical or laboratory tests not involving internal or external administration of radioactive material or the radiation therefrom, to human beings or animals.

H. Selenium-75, in units not exceeding 10 microcuries each for use in In-Vitro clinical or laboratory tests not involving internal or external administration of radioactive material, or the radiation therefrom, to human beings or animals.

2. No person shall receive, acquire, possess, use or transfer radioactive material pursuant to the general license established by RH-402.h.1 until the individual has filed Department Form RH-102 "Registration Certificate - In Vitro Testing With Radioactive Material Under General License" with the Radiation Control Programs, Arkansas Department of Health and received from the Department a validated copy of Department Form RH-102 with registration number assigned or until he has been authorized pursuant to RH-405.C.3 to use radioactive material under the general license in RH-402.h. The registrant shall furnish on Department Form RH-102 the following information and such other information as may be required by that form:

A. Name and address of the registrant;

B. The location of use; and

C. A statement that the registrant has appropriate radiation measuring instruments to carry out In Vitro clinical or laboratory tests with radioactive materials as authorized under the general license in RH-402.h, and that such tests will be performed only by personnel competent in the use of such instruments and in the handling of the radioactive materials.

3. A person who receives, acquires, possesses or uses radioactive material pursuant to the general license established by RH-402.h.1 shall comply with the following:

A. The general licensee shall not possess at any one time, pursuant to the general license established by RH-402.h.1 at any one location of storage or use, a total amount of Iodine-125, Iodine-131, Selenium-75, Cobalt-57 and/or Iron-59 in excess of 200 microcuries.

B. The general licensee shall store the radioactive material, until used, in the original shipping container or in a container providing equivalent radiation protection.

C. The general licensee shall use the radioactive material only for the uses authorized by RH-402.h.1.

D. The general licensee shall not transfer the radioactive material except by transfer to a person authorized to receive it pursuant to a license issued by the Department, the U.S. Nuclear Regulatory Commission or any Agreement State nor transfer the radioactive material in any manner other than in the unopened, labeled shipping container as received from the supplier.

E. The general licensee shall dispose of the Mock Iodine-125 reference or calibration sources described in RH-402.h.1.G as required by RH-1400.

4. The general licensee shall not receive, acquire, possess or use radioactive material pursuant to RH-402.h.l:

A. Except as prepackaged units which are labeled in accordance with the provisions of a specific license issued by the U.S. Nuclear Regulatory Commission or any Agreement State that authorizes manufacture and distribution of Iodine-125, Iodine-131, Carbon-14, Hydrogen-3 (Tritium), Selenium-75, Iron-59, Cobalt-57 or Mock Iodine-125 for distribution to persons generally licensed under RH-402.h.1.

Unless one of the following statements or a substantially similar statement which contains the information called for in the following statements, appears on a label affixed to each prepackaged unit or appears in a leaflet or brochure which accompanies the package:

"This radioactive material may be received, acquired, possessed and used only by physicians, veterinarians in the practice of veterinary medicine, clinical laboratories or hospitals and only for In Vitro clinical or laboratory tests not involving internal or external administration of the material or the radiation therefrom, to human beings or animals. Its receipt, acquisition, possession, use and transfer are subject to these Regulations and a general license of the U.S. Nuclear Regulatory Commission or of a State with which the Commission has entered into an agreement for the exercise of regulatory authority."

_____
(Name of Manufacturer)

5. The registrant possessing or using radioactive materials under the general license of RH-402.h.1 shall report in writing to the Director, Division of Radiation Control and Emergency Management, any changes in the information furnished by him in the "Registration Certificate - In Vitro Testing with Radioactive Material Under General License", Department Form RH-102. The report shall be furnished within thirty (30) days after the effective date of such change.

6. Any person using radioactive material pursuant to the general license of RH-402.h.1 is exempt from the requirements of Section 3, "Standards for Protection Against Radiation" with respect to radioactive material covered by that general license, except that such persons using the Mock Iodine-125 described in RH-402.1.G shall comply with the provisions of RH-1400, RH-1501 and RH-1502.

RH-403. Specific Licenses.

a. Application for specific licenses shall be filed on forms supplied by the Division of Radiation Control and Emergency Management, Arkansas Department of Health, 4815 West Markham, Slot 30, Little Rock, Arkansas 72205-3867. The application shall set forth all applicable information called for by the form. An application for a license may request a license for one or more activities.

b. The Department may at any time after the filing of the original application and before the expiration of the license, require further statements in order to enable the Department to determine whether the application should be granted or denied or whether a license should be modified or revoked.

c. Each application shall be signed by the applicant or licensee or an individual duly authorized to act for and on his behalf.

d. In the application, the applicant may incorporate, by reference, information contained in previous applications, statements or reports filed with the Department: Provided, that such references are clear and specific.

e. Applications and documents submitted to the Department in connection with the applications may be made available for public inspection except that the Department may withhold any document or part thereof from public inspection if disclosure of its contents is not required in the public interest and would adversely affect the interest of a person concerned.

f. The Department may verify information contained in applications and secure additional information deemed necessary to make a reasonable determination as to whether to issue a license and whether special conditions should be attached thereto by visiting the facility or location where radioactive materials would be possessed or used and by discussing details of proposed possession or use of the radioactive materials with the applicant or his designated representative.

g. Requirements For Emergency Response Plans For Certain Licensees.

1. Each application to possess radioactive materials in unsealed form, on foils or plated sources, or sealed in glass in excess of the quantities in RH-905, Schedule F - "Quantities of Radioactive Materials Requiring Consideration of the Need for an Emergency Plan for Responding to a Release," must contain either:

i. An evaluation showing that the maximum dose to a person offsite due to a release of radioactive materials would not exceed 0.5 rem effective dose equivalent or 5 rems to the thyroid; or

ii. An emergency plan for responding to a release of radioactive material.

2. One or more of the following factors may be used to support an evaluation submitted under g.1.i of this section:

i. The radioactive material is physically separated so that only a portion could be involved in an accident;

ii. All or part of the radioactive material is not subject to release during an accident because of the way it is stored or packaged;

iii. The release fraction in the respirable size range would be lower than the release fraction shown in RH-905 due to the chemical or physical form of the material;

iv. The solubility of the radioactive material would reduce the dose received;

v. Facility design or engineered safety features in the facility would cause the release fraction to be lower than shown in RH-905;

vi. Operating restrictions or procedures would prevent a release fraction as large as that shown in RH-905; or

vii. Other factors appropriate for the specific facility.

3. An emergency plan for responding to a release of radioactive material submitted under RH-403.g. must include the following information:

i. Facility description. A brief description of the licensee's facility and area near the site.

ii. Types of accidents. An identification of each type of radioactive materials accident for which protective actions may be needed.

iii. Classification of accidents. A system for classifying each accident as "alert" or "site area emergency."

iv. Detection of accidents. Identification of the means of detecting each type of accident in a timely manner.

v. Mitigation of consequences. A brief description of the means and equipment for mitigating the consequences of each type of accident, including those provided to protect workers onsite, and a description of the program for maintaining the equipment.

vi. Assessment of releases. A brief description of the methods and equipment to assess releases of radioactive materials.

vii. Responsibilities. A brief description of the responsibilities of licensee personnel should an accident occur, including identification of personnel responsible for promptly notifying offsite response organizations and the Department; also responsibilities for developing, maintaining, and updating the plan.

viii. Notification and coordination. A commitment to and a brief description of the means to promptly notify offsite response organizations and request offsite assistance, including medical assistance for the treatment of contaminated injured onsite workers when appropriate. A control point must be established. The notification and coordination must be planned so that unavailability of some personnel parts of the facility, and some equipment will not prevent the notification and coordination. The licensee shall also commit to notify the Department immediately and ensure notification of other appropriate offsite response organizations "and not later than one hour after the licensee declares an emergency."

ix. Information to be communicated. A brief description of the types of information regarding facility status, radioactive releases and, if necessary, recommended protective actions.

x. Training. A brief description of the frequency, performance objectives and plans for the training that the licensee will provide workers on how to respond to an emergency including any special instructions and orientation tours the licensee would offer to fire, police, medical and other emergency personnel. The training shall familiarize personnel with site-specific emergency procedures. Also, the training shall thoroughly prepare site personnel for their responsibilities in the event of accident

scenarios postulated as most probable for the specific site, including the use of team training for such scenarios.

xi. Safe shutdown. A brief description of the means of restoring the facility to a safe condition after an accident.

xii. Exercises. Provisions for conducting quarterly communications checks with offsite response organizations and biennial onsite exercises to test response to simulated emergencies. Quarterly communications checks with offsite response organizations must include the check and update of all necessary telephone numbers. The licensee shall invite offsite response organizations to participate in the biennial exercises. Participation of offsite response organizations in biennial exercises, although recommended, is not required. Exercises must use accident scenarios postulated as most probable for the specific site; the scenarios shall not be known to most exercise participants. The licensee shall critique each exercise using individuals not having direct implementation responsibility for the plan. Critiques of exercises must evaluate the appropriateness of the plan, emergency procedures, facilities, equipment, training of personnel, and overall effectiveness of the response. Deficiencies found by the critiques must be corrected.

xiii. Hazardous chemicals. A certification that the applicant has met its responsibilities under the Emergency Planning and Community Right-to-Know Act of 1986, Title III, Public Law 99-499, if applicable to the applicant's activities at the proposed place of use of the radioactive material.

4. The licensee shall allow the Department and the offsite response organizations expected to respond in case of an accident sixty (60) days to comment on the licensee's emergency plan before submitting it in final form to the Department. The licensee shall provide any comments received within the sixty (60) days to the Department with the emergency plan.

h. An application for a specific license to use radioactive material in the form of a sealed source or in a device that contains the sealed source must either:

1. Identify the source or device by manufacturer and model number as registered with the U.S. Nuclear Regulatory Commission under RH-403.i. or with an Agreement State; or

2. Contains the information identified in RH-403.i.

i. Registration of product information.

1. Any manufacturer or initial distributor of a sealed source or device containing a sealed source whose product is intended for use under a specific license may submit a request to the U.S. Nuclear Regulatory Commission (NRC) for evaluation of radiation safety information about its product and for its registration

2. The request for review must be made in duplicate and sent to the U.S. Nuclear Regulatory Commission; Division of Industrial and Medical Nuclear Safety; Medical, Academic, and Commercial Use Safety Branch; Washington, D.C. 20555.

3. The request for review of a sealed source or a device must include sufficient information about the design, manufacture, prototype testing, quality control program, labeling, proposed uses and leak testing and, for a device, the request must also include sufficient information about installation, service and maintenance, operating and safety instructions, and its potential hazards, to provide reasonable assurance that the radiation safety properties of the source or device are adequate to protect health and minimize danger to life and property.

4. The NRC normally evaluates a sealed source or a device using radiation safety criteria in accepted industry standards. If these standards and criteria do not readily apply to a particular case, the NRC formulates reasonable standards and criteria with the help of the manufacturer or distributor. The NRC shall use criteria and standards sufficient to ensure that the radiation safety properties of the device or sealed source are adequate to protect health and minimize danger to life and property.

5. After completion of the evaluation, the Commission issues a certificate of registration to the person making the request. The certificate of registration acknowledges the availability of the submitted information for inclusion in an application for a specific license proposing use of the product.

6. The person submitting the request for evaluation and registration of safety information about the product in accordance with:

   i. The statements and representations, including quality control program, contained in the request; and

   ii. The provisions of the registration certificate.

RH-404. General Requirements for the Issuance of Specific Licenses.

a. A license application will be approved if the Department determines that:

   1. The applicant is qualified by reason of training and experience to use the material in question for the purpose requested in accordance with Section 3 of these Regulations in such a manner as to minimize danger to public health and safety or property;

   2. The applicant's proposed equipment, facilities and procedures are adequate to protect health and minimize danger to public health and safety or property; and

   3. The issuance of the license will not be inimical to the health and safety of the public; and the applicant satisfies any applicable special requirements in RH-405 of these Regulations.

b. Additional requirements for the issuance of specific licenses for human use of radioactive material.

   1. A person shall not manufacture, produce, acquire, receive, possess, use, or transfer radioactive material for medical use except in accordance with a specific license issued by the Department, the U.S. Nuclear Regulatory Commission, or an Agreement State, or as allowed in RH-404.b.2 or RH-404.b.3.

   2. An individual may receive, possess, use, or transfer radioactive material in accordance with these Regulations under the supervision of an authorized user as provided in RH-404.b.7 through RH-404.b.9, unless prohibited by license condition.

3. An individual may prepare unsealed radioactive material for medical use in accordance with these Regulations under the supervision of an authorized nuclear pharmacist or authorized user as provided in RH-404.b.7 through RH-404.b.9.

4. A licensee shall provide to the Department a copy of the board certification; the Department, the U.S. Nuclear Regulatory Commission, or an Agreement State license; or the permit issued by a licensee of broad scope for each individual no later than thirty (30) days after the date that the licensee permits the individual to work as an authorized user or an authorized nuclear pharmacist pursuant to RH-412.

5. A licensee shall notify the Department by letter no later than thirty (30) days after:

   A. An authorized user, an authorized nuclear pharmacist, Radiation Safety Officer, or teletherapy physicist permanently discontinues performance of duties under the license or has a name change; or

   B. The licensee's mailing address changes.

6. The licensee shall mail the documents required in this Section to the appropriate address identified in RH-104.

7. A licensee that permits the receipt, possession, use or transfer of radioactive material by an individual under the supervision of an authorized user as allowed by RH-404.b.2 of this Part shall:

   A. Instruct the supervised individual in the principles of radiation safety appropriate to that individual's use of radioactive material and in the licensee's written quality management program;

   B. Require the supervised individual to follow the instructions of the supervising authorized user, follow the written radiation safety and quality management procedures established by the licensee, and comply with the Regulations and the license conditions with respect to the use of radioactive material; and

   C. Periodically review the supervised individual's use of radioactive material and the records kept to reflect this use.

RH-404. (Cont'd)

8. A licensee that permits the preparation of radioactive material for medical use by an individual under the supervision of an authorized nuclear pharmacist or physician who is an authorized user, as allowed by RH-404.b.3. shall:

   A. Instruct the supervised individual in the preparation of radioactive material for medical use and the principles of and procedures for radiation safety and in the licensee's written quality management program, as appropriate to that individual's use of radioactive material;

   B. Require the supervised individual to follow the instructions given pursuant to RH-404.b.8.A and to comply with the Regulations and license conditions; and

   C. Require the supervising authorized nuclear pharmacist or physician who is an authorized user to periodically review the work of the supervised individual as it pertains to preparing radioactive material for medical use and the records kept to reflect that work.

9. A licensee that supervises an individual is responsible for the acts and omissions of the supervised individual.

10. A licensee may use for medical use only:

   A. Sealed sources or devices manufactured, labeled, packaged, and distributed in accordance with a license issued pursuant to 10 CFR Part 30 and 10 CFR 32.74 or RH-405.n; or

   B. Teletherapy sources manufactured and distributed in accordance with a license issued pursuant to 10 CFR Part 30 or RH-405.n.

RH-405. Special Requirements for Issuance of Certain Specific Licenses.

a. Human use of radioactive materials in institutions. In addition to the requirements set forth in Part D, RH-404, a specific license for human use of radioactive material in an institution will be issued only if:

   1. Each medical institution licensee shall establish a Radiation Safety Committee to oversee the use of radioactive material.

RH-405. (Cont'd)

A. Each Committee must meet the following administrative requirements

i. Membership must consist of at least three (3) individuals and must include an authorized user of each type of use permitted by the licensee, the Radiation Safety Officer, a representative of the nursing service, and representative of management who is neither an authorized user nor a Radiation Safety Officer. Other members may be included as the licensee deems appropriate.

ii. The Committee must meet at least semi-annually.

iii. To establish a quorum and to conduct business, at least one-half of the Committee's membership must be present, including the Radiation Safety Officer and the management's representative.

iv. The minutes of each Radiation Safety Committee meeting must include:

(a). The date of the meeting;

(b). Members present;

(c). Members absent;

(d). Summary of deliberations and discussions;

(e). Recommended actions and the numerical results of all ballots; and

(f). ALARA program reviews.

v. The Committee must promptly provide each member with a copy of the meeting minutes, and retain one copy for the duration of the license.

B. To oversee the use of licensed material, the Committee must:

i. Review recommendations on ways to maintain individual and collective doses ALARA;

ii. (a). Review, on the basis of safety and with regard to the training and experience standards, and approve or disapproved any individual who is to be listed as an authorized user, an authorized nuclear pharmacist, the Radiation Safety Officer, or a teletherapy physicist before submitting a license application or request for amendment or renewal; or

(b). Review, pursuant to RH-412, on the basis of the board certification, the license, or the permit identifying an individual, and approve or disapprove any individual prior to allowing that individual to work as an authorized user or authorized nuclear pharmacist.

iii. Review, on the basis of safety, and approve or disapprove with the advice and consent of the Radiation Safety Officer and the management representative, minor changes in radiation safety procedures that are not potentially important to safety;

iv. Review quarterly, with the assistance of the Radiation Safety Officer, a summary of the occupational radiation dose records of all personnel working with radioactive material;

v. Review quarterly, with the assistance of the Radiation Safety Officer, all incidents involving radioactive material with respect to cause and subsequent actions taken; and

vi. Review annually, with the assistance of the Radiation Safety Officer, the radiation safety program.

2. The applicant possesses adequate facilities for the clinical care of patients;

3. The physician designated on the application as the individual user has substantial experience in the handling and administration of radioactive material and, where applicable, the clinical management of radioactive patients; and

4. If the application is for a license to use unspecified quantities or multiple types of radioactive material, the applicant's staff has substantial experience in the use of a variety of radioactive materials for a variety of human uses.

b. Licensing of Individual Physicians for Human Use of Radioactive Materials.

1. An application by an individual physician or group of physicians for a specific license for human use of radioactive material will be approved if:

A. The applicant satisfies the general requirements specified in RH-404.

B. The application is for use in the applicant's practice in an office outside a medical institution;

C. The applicant has access to a hospital possessing adequate facilities to hospitalize and monitor the applicant's radioactive patients whenever it is advisable; and

D. The applicant has extensive experience in the proposed use, the handling and administration of radioisotopes and where applicable, the clinical management of radioactive patients.

2. The Department will not approve an application by an individual physician or group of physicians for a specific license to receive, possess or use radioactive material on the premises of a medical institution unless:

A. The use of radioactive material is limited to:

i. The administration of radiopharmaceuticals for diagnostic or therapeutic purposes;

ii. The performance of diagnostic studies on patients to whom a radiopharmaceutical has been administered;

iii. The performance of In Vitro diagnostic studies; or

iv. The calibration and quality control checks of radioactive assay instrumentation, radiation safety instrumentation and diagnostic instrumentation.

B. The physician brings the radioactive material with him/her and removes the radioactive material when he/she departs. (The institution cannot receive, possess or store radioactive material other than the amount of material remaining in the patient); and

C. The medical institution does not hold a radioactive material license under RH-405.a.

D. The physician obtains written approval from the institution's administration authorizing him/her to bring radioactive material into the institution.

c. Specific Licenses for Certain Groups of Medical Uses of Radioactive Material.

1. Subject to the provisions of RH-405.c.2, 3 and 4, an application for a specific license pursuant to Paragraphs a, b or d of this Section for any medical use or uses of radioactive material specified in one or more of Groups I to V, inclusive, of Schedule D will be approved for all of the uses within the group or groups which include the use or uses specified in the application if:

A. The applicant satisfies the requirements of Paragraphs a, b or d of this Section;

B. The applicant or the physician designated in the application as the individual user has adequate clinical experience in the types of uses included in the Group or Groups;

C. The applicant or the physicians and all other personnel who will be involved in the preparation and use of the radioactive material have adequate training and experience in the handling of radioactive material appropriate to their participation in the uses included in the Group or Groups;

D. The applicant's radiation detection and measuring instrumentation is adequate for conducting the procedures involved in the uses included in the Group or Groups; and

E. The applicant's radiation safety operating procedures are adequate for handling and disposal of the radioactive material involved in the uses included in the Group or Groups.

2. Any licensee who is authorized to use radioactive material pursuant to one or more Groups in RH-405.c.1 and Schedule D is subject to the following conditions:

A. i. For Groups I, II, IV and V, no licensee shall receive, possess or use radioactive material except as a radiopharmaceutical manufactured in the form to be administered to the patient, labeled, packaged and distributed in accordance with a specific license issued by the Department, the U.S. Nuclear Regulatory Commission pursuant to Section 32.72 of 10 CFR Part 32 or a specific license issued by an Agreement State pursuant to equivalent regulations; or

ii. Prepared by an authorized nuclear pharmacist, a physician who is an authorized user, or an individual under the supervision of either as specified in RH-404.b.8.

B. For Group III, no licensee shall receive, possess or use generators or reagent kits that do not contain radioactive material to prepare radiopharmaceuticals containing radioactive material, except:

i. Reagent kits not containing radioactive material that are approved by the Department, the U.S. Nuclear Regulatory Commission or an Agreement State for use by persons licensed pursuant to RH-405.c and Schedule D or equivalent regulations; or

ii. Generators or reagent kits containing radioactive material that are manufactured, labeled, packaged and distributed in accordance with a specific license issued by the U.S. Nuclear Regulatory Commission pursuant to Sec. 32.73 of10 CFR Part 32 or a specific license issued by an Agreement State pursuant to equivalent regulations.

C. For Group III, any licensee using generators or reagent kits shall:

i. Elute the generator or process radioactive material with the reagent kit, in accordance with instructions approved by the Nuclear Regulatory Commission or an Agreement State and furnished by the manufacturer on the label attached to or in the leaflet or brochure that accompanies the generator or reagent kit;

ii. Before administration to patients, cause each elution or extraction of Technetium-99m from a Molybdenum-99/Technetium-99m generator to be tested to determine either the total Molybdenum-99 activity or the concentration Molybdenum-99. This testing shall be of conducted according to written procedures and by personnel who have been specifically trained to perform the test;

iii. Prohibit the administration to patients of Technetium-99m containing more than 0.15 microcurie of Molybdenum-99 per millicurie of Technetium-99m, and

iv. Maintain for two years, for Department inspection, records of the Molybdenum-99 test conducted on each elution from the generator.

3. Any licensee who is licensed pursuant to RH-405.c. 1 for one or more of the medical use groups in Schedule D also is authorized to use radioactive material under the general license in RH-402.h for the specified In Vitro uses without filing Department Form RH-102 as required by RH-402.h provided, that the licensee is subject to the other provisions of RH-402.h.

4. Any licensee who is licensed pursuant to RH-405.c.1 for one or more of the medical use groups in Schedule D also is authorized, subject to the provisions of RH-405.c.4 and 5 to receive, possess, and use for calibration and reference standards:

   A. Any radioactive material listed in Group I, Group II or Group III of Schedule D of this part with a half-life not longer than one hundred (100) days, in amounts not to exceed15 millicuries total;

   B. Any radioactive material listed in Group I, Group II or Group III of Schedule D of this Part with half-life greater than one hundred (100) days in amounts not to exceed 200 microcuries total;

   C. Technetium-99m in amounts not to exceed 50 millicuries; and

   D. Any radioactive material, in amounts not to exceed 6 millicuries per source, contained in calibration or reference sources that have been manufactured, labeled, packaged and distributed in accordance with a specific license issued by the U.S. Nuclear Regulatory Commission pursuant to Section 32.74 of 10 CFR Part 32 or a specific license issued to the manufacturer by an Agreement State pursuant to equivalent regulations.

5. A. Any licensee who possesses sealed sources as calibration or reference sources pursuant to RH-405.c.4 shall cause each sealed source containing radioactive material, other than Hydrogen-3, with a half-life greater than 30 days in any form other than gas, to be tested for leakage and/or contamination at intervals not to exceed six (6) months. Prior to the transfer, the sealed sources should not be used until tested, provided, however, that no leak tests are required when:

   i. The source contains 100 microcuries or less of beta and/or gamma emitting material or 10 microcuries or less of alpha emitting material, or

ii. The sealed source is stored and is not being used; such sources shall, however, be tested for leakage prior to any use or transfer unless they have been leak tested within six (6) months prior to the date of use or transfer.

B. The leak test shall be capable of detecting the presence of 0.005 microcurie of radioactive material on the test sample. The test sample shall be taken from the sealed source or from the surfaces of the device in which the sealed source is mounted or stored on which contamination might be expected to accumulate. Records of leak test results shall be kept in units of microcuries and maintained for inspection by the Department.

C. If the leak test reveals the presence of 0.005 microcurie or more of removable contamination the licensee shall immediately withdraw the sealed source from use and shall cause it to be decontaminated and repaired or to be disposed of in accordance with Section 2 and Section 3 of these Regulations. A report shall be filed within five (5) days of the test with the Department describing the equipment involved, the test results and the corrective action taken.

6. Any licensee who possesses and uses calibration and reference sources pursuant to RH-405.c.4.D shall:

A. Follow the radiation safety and handling instructions approved by the Department, the U.S. Nuclear Regulatory Commission or an Agreement State and furnished by the manufacturer on the label attached to the source or permanent container thereof or in the leaflet or brochure that accompanies the source and maintain such instruction in a legible and conveniently available form; and

B. Conduct a quarterly physical inventory to account for all sources received and possessed. Records of the inventories shall be maintained for inspection by the Department and shall include the quantities and kinds of radioactive material, location of sources, and the date of the inventory.

7. Provisions for research involving human subjects. A licensee who is licensed in accordance with RH-405.c.1 may conduct research involving human subjects using radioactive material provided that the research is conducted, funded, supported, or regulated by a Federal Agency which has implemented the Federal Policy for the Protection of Human Subjects. Otherwise, a licensee shall apply for and receive approval of a specific amendment to its Department license before conducting such research. Both types of licensees shall, at a minimum, obtain informed consent from the human subjects and obtain prior review and approval of the research activities by an "Institutional Review Board" in accordance with the meaning of these terms as defined and described in the Federal Policy for the Protection of Human Subjects.

8. Nothing in this Part relieves the licensee from complying with applicable U.S. Food and Drug Administration, other Federal, and State requirements governing radioactive drugs or devices.

d. Human Use of Sealed Sources. In addition to the requirements set forth in Part D, RH-404, a specific license for human use of sealed sources will be issued only if the applicant or if the application is made by an institution, the individual user:

1. Has specialized training in the therapeutic use of the sealed source considered or has experience equivalent to such training, and

2. Is a physician.

e. Manufacture and Distribution of Devices to Persons Generally Under Part D, RH-402.b. In addition to the requirements set forth in Part D, RH-404, a specific license to distribute certain devices of the types enumerated in Part D, RH-402.b to persons generally licensed under Part D, RH-402.b will be issued only if:

1. The applicant submits sufficient information relating to the design, manufacture, prototype testing, quality control, labels, proposed uses, installation, servicing, leak testing, operating and safety instructions and potential hazards of the device to provide reasonable assurance that:

A. The device can be safely operated by persons not having training in radiological protection;

B. Under ordinary conditions of handling, storage and use of the device, the radioactive material contained in the device will not be released or inadvertently removed from the device and it is unlikely that any person will receive in any period of one (1) calendar year a dose in excess of ten (10%) percent of the limits specified in RH-1200.a; and

C. Under accident conditions (such as fire and explosion) associated with handling, storage and use of the device, it is unlikely that any person would receive an external radiation dose or dose commitment in excess of the following organ doses:

Whole body; head and trunk; active blood-forming organs;
gonads; or lens of eye .....15 rems

Hands and forearms; feet and ankles; localized areas of skin averaged over areas no larger than 1 square centimeters..... 200 rems

Other organs .....50 rems

D. Each device bears a durable, legible, clearly visible label or labels approved by the Department, which contain in a clearly identified and separate statement:

i. Instructions and precautions necessary to assure safe installation, operation and servicing of the device (documents such as operating and service manuals may be identified in the label and used to provide this information);

ii. The requirement or lack of requirement, for leak testing or for testing any on-off mechanism and indicator, including the maximum time interval for such testing and the identification of radioactive material by isotope, quantity or radioactivity and date of determination of the quantity; and

iii. The information called for in the following statement in the same or substantially similar form:

The receipt, possession, use and transfer of this device Model _____, [9/] Serial No. _____[9/] are subject to a general license or the equivalent and the regulations of the U.S. NRC or a State with which the NRC has entered into an agreement for the exercise of regulatory authority. This label shall be maintained on the device in a legible condition. Removal of this label is prohibited.

CAUTION - RADIOACTIVE MATERIAL

_____

(name of manufacturer or distributor)

2. In the event the applicant desires that the device be required to be tested at intervals longer than six (6) months, either for proper operation of the on-off mechanism and indicator, if any, or for leakage of radioactive material or for both, he shall include in his application sufficient information to demonstrate that such longer interval is justified by performance characteristics of the device or similar devices and by design features which have a significant bearing on the probability or consequences of leakage of radioactive material from the device or failure of the on-off mechanism and indicator. In determining the acceptable interval for the test for leakage of radioactive material, the Department will consider information which includes, but is not limited to:

A. Primary containment (source capsule);

B. Protection of primary containment;

C. Method of sealing containment;

D. Containment construction materials;

E. Form of contained radioactive material;

F. Maximum temperature withstood during prototype test;

G. Maximum pressure withstood during prototype tests;

H. Maximum quantity of contained radioactive material;

I. Radiotoxicity of contained radioactive material; and

J. Operating experience with identical devices or similarly designed and constructed devices.

3. In the event the applicant desires that the general licensee under RH-402.b, or under equivalent regulations of the NRC or an Agreement State, be authorized to install the device, collect the sample to be analyzed by a specific licensee for leakage of radioactive material, service the device, test the on-off mechanism and indicator or remove the device from installation, he shall include in his application written instructions to be followed by the general licensee, estimated calendar year doses associated with such activity or activities and bases for such estimates. The submitted information shall demonstrate that performance of such activity or activities by an individual untrained in radiological protection, in addition to other handling, storage and use of devices under the general license, is unlikely to cause that individual to receive a calendar year dose in excess of ten (10%) percent of the limits specified in RH-1200.a.

4. Each person licensed under RH-405.e to distribute devices to generally licensed persons shall:

A. Furnish a copy of the general license contained in RH-402.b to each person to whom he directly or through an intermediate person transfers radioactive material in a device for use pursuant to the general license contained in RH-402.b.

B. Furnish a copy of the general license contained in the NRC or Agreement State's regulation equivalent to RH-402.b or alternatively, furnish a copy of the general license contained in RH-402.b to each person to whom he directly or through an intermediate person transfers radioactive material in a device for use pursuant to the general license of the NRC or the Agreement State. If a copy of the general license in RH-402.b is furnished to such a person, it shall be accompanied by a note explaining that the use of the device is regulated by the U.S. NRC or Agreement State under requirements substantially the same as those in RH-402.b

C. Report to the Department all transfers of such devices to persons for use under the general license in RH-402.b. Such report shall identify each general licensee by name and address, an individual by name and/or position who may constitute a point of contact between the Department and the general licensee, the type and model number of device transferred and the quantity and type of radioactive material contained in the device. If one or more intermediate persons will temporarily possess the device at the intended place of use prior to its possession by the user, the report shall include identification of each intermediate person by name, address, contact and relationship to the intended user. If no transfers have been made to persons generally licensed under RH-402.b during the reporting period, the report shall so indicate. The report shall cover each calendar quarter and shall be filed within thirty (30) days thereafter.

D. i. Report to the NRC all transfers of such devices to persons for use under the NRC general license in Section 31.5 of 10 CFR Part 31.

ii. Report to the responsible State Agency all transfers of such devices to persons for use under a general license in an Agreement State's Regulations equivalent to RH-402.b.

iii. Such reports shall identify each general licensee by name and address, an individual by name and/or position who may constitute a point of contact between the Department and the general licensee, the type and model of the device transferred and the quantity and type of radioactive material contained in the device. If one or more intermediate persons will temporarily possess the device at the intended place of use prior to its possession by the user, the report shall include identification of each intermediate person by name, address, contact and relationship to the intended user. The report shall be submitted within thirty (30) days after the end of each calendar quarter in which such a device is transferred to the generally licensed person.

iv. If no transfers have been made to NRC licensees during the reporting period, this information shall be reported to the NRC.

v. If no transfers have been made to a particular state during the reporting period, this information shall be reported to the responsible State Agency upon request of the Department.

E. Keep records showing the name, address and the point of contact for each general licensee to whom the applicant directly or through an intermediate person transfers radioactive material in devices for use pursuant to the generally license provided in RH-402.b or equivalent regulations of the NRC or an Agreement State. The records should show the date of each transfer, the isotope and the quantity of radioactivity in each device transferred, the identity of any intermediate person and compliance with the report requirements of this Section

f. Use of Sealed Sources in Non-medical Radiography. A specific license for use of sealed sources in radiography will be issued only if:

1. The applicant satisfies the general requirements specified in Part D, RH-404; and

2. The applicant will have an adequate program for training radiographers and radiographers' assistants and submits to the Department a schedule or description of such program which specifies the:

A. Initial training;

B. Periodic training;

C. On-the-job training;

D. Means to be used by the licensee to determine the radiographer's knowledge and understanding of and ability to comply with, Department Regulations and licensing requirements and the operating and emergency procedures of the applicant; and

E. Means to be used by the licensee to determine the radiographer's assistant's knowledge and understanding of and ability to comply with the operating and emergency procedures of the applicant; and

3. The applicant has established and submits to the Department satisfactory written operating and emergency procedures as described in RH-1802.b; and

4. The applicant has established and submits to the Department a description of its internal audit program in accordance with RH-1802.d; and

5. The applicant submits to the Department a description of his overall organizational structure pertaining to the industrial radiography program including specified delegations of authority and responsibility for operation of the program; and

6. The applicant who desires to conduct his own leak tests has established adequate procedures to be followed in leak testing sealed sources for possible leakage and contamination and submits to the Department a description of such procedures including:

A. Instrumentation to be used;

B. Methods of performing test, e.g., points on equipment to be smeared and method of taking smear; and

C. Pertinent experience of the person who will perform the tests.

g. Licensing the Introduction of Radioactive Material into Products in Exempt Concentrations. In addition to the requirements set forth in Section RH-404 above, a specific license authorizing the introduction of radioactive material into a product or material owned by or in the possession of the licensee or another to be transferred to persons exempt under RH-301.a.1 will be issued only if:

1. The applicant submits a description of the product or material into which the radioactive material will be introduced, intended use of the radioactive material and the product or material into which it is introduced, method of introduction, initial concentration of the radioactive material in the product or material, control methods to assure that no more than the specified concentration is introduced into the product or material, estimated time interval between introduction and transfer of the product or material and estimated concentration of the radioactive material in the product or material at the time of transfer; and

2. The applicant provides reasonable assurance that the concentrations of radioactive material at the time of transfer will not exceed the concentrations in RH-902, Schedule C, that re-concentration of the radioactive material in concentrations exceeding those in RH-902, Schedule C, is not likely, that use of lower concentrations is not feasible and that the product or material is not likely to be incorporated in any food, beverage, cosmetic, drug or other commodity or product designed for ingestion or inhalation by or application to, a human being.

Each person licensed under this Paragraph g shall file an annual report with the Department which shall identify the type and quantity of each product or material into which radioactive material has been introduced during the reporting period; name and address of the person who owned or possessed the product or material, into which radioactive material has been introduced, at the time of introduction; the type and quantity of radionuclide introduced into each such product or material; and the initial concentrations of the radionuclide in the product or material at time of transfer of the radioactive material by the licensee. If no transfers of radioactive material have been made pursuant to this Paragraph g during the reporting period, the report shall so indicate. The report shall cover the year ending June 30 and shall be filed within thirty (30) days thereafter.

h. Licensing of the Manufacture, Assembly or Repair of Luminous Safety Devices for Use in Aircraft. An application for a specific license to manufacture, assemble or repair luminous safety devices containing Tritium or Promethium-147 for use in aircraft, for distribution to persons generally licensed under RH-402.c will be approved if:

1. The applicant satisfies the general requirements specified in RH-404; and

2. The applicant satisfies the requirements of Sections 32.53, 32.54, 32.55, 32.556 and 32.101 of10 CFR Part 32 or their equivalent.

i. Licensing of the Manufacture of Calibration Sources Containing Americium-241, Plutonium or Radium-226 for Distribution to Persons Generally Licensed Under RH-402.d. An application for a specific license to manufacture calibration and reference sources containing Americium-241, Plutonium or Radium-226 to persons generally licensed under RH-402.d will be approved if:

RH-405. (Cont'd)

1. The applicant satisfies the general requirement of RH-401; and

2. The applicant satisfies the requirements of Sections 32.57, 32.58, 32.59 and 32.102 of 10 CFR Part 32 and Section 70.39 of 10 CFR Part 70 or their equivalent.

j. Licensing of the Manufacture and Distribution of Radioactive Material for Certain In Vitro Clinical or Laboratory Testing Under General License. An application for a specific license to manufacture or distribute radioactive material for use under the general license of RH-402.h will be approved if:

1. The applicant satisfies the general requirements specified RH-404.

2. The radioactive material is to be prepared for distribution in prepackaged units of:

A. Carbon-14 in units not exceeding 10 microcuries each.

B. Cobalt-57 in units not exceeding 10 microcuries each.

C. Hydrogen-3 (Tritium) in units not exceeding 50 microcuries each.

D. Iodine-125 in units not exceeding 10 microcuries each.

E. Mock Iodine-125 in units not exceeding 0.05 microcurie of Iodine-129 and 0.005 microcurie of Americium-241 each.

F. Iodine-131 in units not exceeding 10 microcuries each.

G. Iron-59 in units not exceeding 20 microcuries each.

H. Selenium-75 in units not exceeding 10 microcuries each.

3. Each prepackaged unit bears a durable, clearly visible label:

   A. Identifying the radioactive contents as to chemical form and radionuclide and indicating that the amount of radioactivity does not exceed10 microcuries of Iodine-125, Iodine-131, Carbon-14, Cobalt-57 or Selenium-75; 50 microcuries of Hydrogen-3 (Tritium); 20 microcuries of Iron-59; or Mock Iodine-125 in units not exceeding 0.05 microcurie of Iodine-129 and 0.005 microcurie of Americium-241 each; and

   B. Displaying the radiation caution symbol described in RH-1303.a.1 and 2 and the words

      "CAUTION, RADIOACTIVE MATERIAL", and **"Not for Internal or External Use in Humans or Animals".**

4. The following statement, as appropriate or a substantially similar statement which contains the information called for in the statement, appears on a label affixed to each prepackaged unit or appears in a leaflet or brochure which accompanies the package:

   "This radioactive material may be received, acquired, possessed and used only by physicians, veterinarians, clinical laboratories or hospitals and only for In Vitro clinical or laboratory tests not involving internal or external administration of the material or the radiation therefrom, to human beings or animals. Its receipt, acquisition, possession, use and transfer are subject to these Regulations and a general license of the U.S. Nuclear Regulatory Commission or of a State with which the Commission has entered into an agreement for the exercise of regulatory authority."

   _____
   (Name of Manufacturer)

5. The label affixed to the unit or the leaflet or brochure which accompanies the package, contains adequate information as to the precautions to be observed in handling and storing such radioactive material. In the case of the Mock Iodine-125 reference or calibration source, the information accompanying the source must also contain directions to the licensee regarding the waste disposal requirements set out in Part E, Section 3 of these Regulations.

RH-405. (Cont'd)

k. Licensing the Manufacture and Distribution of Ice Detection Devices. An application for a specific license to manufacture and distribute ice detection devices to persons generally licensed under RH-402.f will be approved if:

1. The applicant satisfies the general requirements of RH-404; and

2. The criteria of Sections 32.61, 32.62 and 32.103 of 10 CFR Part 32 are met.

l. Manufacture, Preparation, or Transfer for Commercial Distribution of Radiopharmaceuticals Containing Radioactive Material for Medical Use Under Group Licenses.

1. An application for a specific license to manufacture, prepare, or transfer for commercial distribution radiopharmaceuticals containing radioactive material for use by persons licensed pursuant to RH-405.c for the uses listed in RH-903 Schedule D Group I, Group II, Group IV or Group V of this Part will be approved if:

A. The applicant satisfies the general requirements specified in RH-404 of this Part;

B. The applicant submits evidence that the applicant is at least one of the following:

i. Registered or licensed with the U.S. Food and Drug Administration (FDA) as a drug manufacturer;

ii. Registered or licensed with a State Agency as a drug manufacturer;

iii. Licensed as a pharmacy by a State Board of Pharmacy; or

iv. Operating as a nuclear pharmacy within a Federal medical institution.

C. The applicant submits information on the radionuclide, chemical and physical form, packaging including maximum activity per vial, syringe, generator, or other container of the radiopharmaceutical; and the shielding provided by the packaging to show it is appropriate for safe handling and storage of radiopharmaceuticals by group licensees; and

D. The applicant satisfies the following labeling requirements:

i. A label is affixed to each transport radiation shield, whether it is constructed of lead, glass, plastic, or other material, of a radiopharmaceutical to be transferred for commercial distribution. The label must include the radiation symbol and the words

"CAUTION, RADIOACTIVE MATERIAL" or **"DANGER, RADIOACTIVE MATERIAL";**

the name of the radiopharmaceutical or its abbreviation; and the quantity of radioactivity at a specified date and time. For radiopharmaceuticals with a half life greater than 100 (one hundred) days, the time may be omitted.

ii. A label is affixed to each syringe, vial, or other container used to hold a radiopharmaceutical to be transferred for commercial distribution. The label must include the radiation symbol and the words

"CAUTION, RADIOACTIVE MATERIAL" or **"DANGER, RADIOACTIVE MATERIAL"**

and an identifier that ensures that the syringe, vial, or other container can be correlated with the information on the transport radiation shield label.

2. A licensee described by RH-405.I.1.B.iii or RH-405.I.1.B.iv of this Section:

A. May prepare radiopharmaceuticals for medical use, as defined in RH-200, provided that the radiopharmaceutical is prepared by either an authorized nuclear pharmacist, as specified in RH-405.I.2.B and RH-405.I.2.C of this Section, or an individual under the supervision of an authorized nuclear pharmacist as specified in RH-404.b.8.

B. May allow a pharmacist to work as an authorized nuclear pharmacist if:

i. This individual qualifies as an authorized nuclear pharmacist as defined in RH-200;

ii. The licensee has received an approved license amendment identifying this individual as an authorized nuclear pharmacist.

C. The actions authorized in RH-405.I.2.A and RH-405.I.2.B of this Section are permitted in spite of more restrictive language in license conditions.

D. May designate a pharmacist (as defined in RH-200) as an authorized nuclear pharmacist if the individual is identified as of December 2, 1994, as an "authorized user" on a nuclear pharmacy license issued by the Department under this Part.

E. Shall provide to the Department a copy of each individual's certification by the Board of Pharmaceutical Specialties, the Department, the U.S. Nuclear Regulatory Commission, or other Agreement State license, or the permit issued by a licensee of broad scope, and a copy of the State pharmacy licensure or registration, no later than 30 (thirty) days after the date that the licensee allows, pursuant to RH-405.I.2.B.i and RH-405.I.2.B.iii of this Section, the individual to work as an authorized nuclear pharmacist.

3. A licensee shall possess and use instrumentation to measure the radioactivity of radiopharmaceuticals. The licensee shall have procedures for use of the instrumentation. The licensee shall measure, by direct measurement or by combination of measurements and calculations, the amount of radioactivity in dosages of alpha-, beta-, or photon-emitting radiopharmaceuticals prior to transfer for commercial distribution. In addition, the licensee shall:

A. Perform tests before initial use, periodically, and following repair, on each instrument for accuracy, linearity, and geometry dependence, as appropriate for the use of the instrument; and make adjustments when necessary; and

B. Check each instrument for constancy and proper operation at the beginning of each day of use.

4. Nothing in this Section relieves the licensee from complying with applicable U.S. Food and Drug Administration, other Federal, and State requirements governing radioactive drugs.

m. Deleted.

n. Manufacture and Distribution of Sources or Devices Containing Radioactive Material for Medical Use. An application for a specific license to manufacture and distribute sources and devices containing radioactive material to persons licensed pursuant to RH-402 for use as a calibration or reference source or for human use of sealed sources will be approved if:

1. The applicant satisfies the general requirements in RH-404 of this Part;

2. The applicant submits sufficient information regarding each type of source or device pertinent to an evaluation of its radiation safety, including:

A. The radioactive material contained, its chemical and physical form and amount,

B. Details of design and construction of the source or device,

C. Procedures for and results of, prototype tests to demonstrate that the source or device will maintain its integrity under stresses likely to be encountered in normal use and accidents,

D. For devices containing radioactive material the radiation profile of a prototype device,

E. Details of quality control procedures to assure that production sources and devices meet the standards of the design and prototype tests,

F. Procedures and standards for calibrating sources and devices,

G. Legend and methods for labeling sources and devices as to their radioactive content, and

H. Instructions for handling and storing the source or device from the radiation safety standpoint; these instructions are to be included on a durable label attached to the source or device or attached to a permanent storage container for the source or device; provided, that instructions which are too lengthy for such label may be summarized on the label and printed in detail on a brochure which is referenced on the label;

3. The label affixed to the source or device or to the permanent storage container for the source or device, contains information on the radionuclide, quantity and date of assay and a statement that the name of source or device is licensed by the Department for distribution to persons licensed pursuant to RH-405.d of this Part or under equivalent licenses of the U.S. Nuclear Regulatory Commission or an Agreement State, provided that such labeling for sources which do not require long term storage may be on a leaflet or brochure which accompanies the source.

4. In the event the applicant desires that the source or device be required to be tested for leakage of radioactive material at intervals longer than six (6) months, he shall include in his application sufficient information to demonstrate that such longer interval is justified by performance characteristics of the source or device or similar sources or devices and by design features that have a significant bearing on the probability or consequences of leakage of radioactive material from the source; and

5. In determining the acceptable interval for test of leakage of radioactive material, the Department will consider information that includes, but is not limited to:

   A. Primary containment or source capsule,

   B. Protection of primary containment,

   C. Method of sealing containment,

   D. Containment construction material,

   E. Form of contained radioactive material,

   F. Maximum temperature withstood during prototype tests,

   G. Maximum pressure withstood during prototype tests,

   H. Maximum quantity of contained radioactive material,

   I. Radiotoxicity of contained radioactive material,

   J. Operation experience with identical sources or devices or similarly designed and constructed sources or devices.

o. Radioactive drug. Manufacture, preparation, or transfer for commercial distribution of capsules containing carbon-14 urea for "in vivo" diagnostic use for humans to persons exempt from licensing. Requirements for a license:

1. An application for a specific license to manufacture, prepare, produce, package, repackage, or transfer for commercial distribution of capsules containing carbon-14 capsules containing one (1) microcurie (37 kBq) carbon-14 urea (allowing for nominal variation that may occur during the manufacturing process) each, for "in vivo" diagnostic use, to persons exempt from licensing under RH-301.f. or the equivalent regulations of the Nuclear Regulatory Commission or of an Agreement State will be approved if:

   a. The applicant satisfies the general requirements specified in RH-404, provided that the requirements of RH-404.a.1. and a.2. do not apply to an application for a license to transfer radioactive material manufactured, prepared, processed, produced, packaged, or repackaged pursuant to license issued by the Nuclear Regulatory Commission or another Agreement State;

   b. The applicant meets the requirements under RH-405.I.1.B. of this Section;

   c. The applicant provides evidence that each capsule contains one (1) microcurie (37 kBq) carbon-14 urea (allowing for nominal variation that may occur during the manufacturing process);

   d. The carbon -14 urea is not contained in any food, beverage, cosmetic, drug (except as described in this Section) or other commodity designed for ingestion or inhalation by, or topical application to, a human being;

   e. The carbon -14 urea is in the form of a capsule, identified as radioactive, and to be used for its radioactive properties, but is not incorporated into any manufactured or assembled commodity, product, or device intended for commercial distribution; and

   f. The applicant submits copies of prototype labels and brochures and the Department approves these labels and brochures.

2. Nothing in this Section relieves the licensee from complying with applicable Food & Drug Administration (FDA), other Federal, and State requirements governing drugs.

p. Radioactive drug. Manufacture, preparation, or transfer for commercial distribution of capsules containing carbon-14 urea for "in vivo" diagnostic use for humans to persons exempt from licensing. Conditions of license. Each license issued under RH-405.o. is subject to the following conditions:

1. The immediate container of the capsule(s) must bear a durable, legible label which:

   a. Identifies the radioisotope, the physical and chemical form, the quantity of radioactivity of each capsule at a specific date; and

   b. Bears the words **"Radioactive Material".**

2. In addition to the labeling information required by RH-405.p.1, the label affixed to the immediate container, or an accompanying brochure also must:

   a. State that the contents are exempt from NRC or Agreement State licensing requirements; and

   b. Bear the words

   "Radioactive Material. For "In Vivo" Diagnostic Use Only. This Material Is Not To Be Used For Research Involving Human Subjects and Must Not Be Introduced into Foods, Beverages, Cosmetics, or Other Drugs or Medicinals, or into Products Manufactured For Commercial Distribution. This Material May Be Disposed of in Ordinary Trash."

RH-406. Special Requirements for Specific Licenses of Broad Scope. This Paragraph prescribes requirements for the issuance of specific licenses of broad scope for radioactive material ("broad licenses")[11/] and certain regulations governing holders of such licenses.

RH-406. (Cont'd)

a. The different types of broad licenses are set forth below:

1. A "Type A specific license of broad scope" is a specific license authorizing receipt, acquisition, ownership, possession, use and transfer of any chemical or physical form of the radioactive material specified in the license, but not exceeding quantities specified in the license, for any authorized purpose. The quantities specified are usually in the multicurie range.

2. A "Type B specific license of broad scope" is specific license authorizing receipt, acquisition, a ownership, possession, use and transfer of any chemical or physical form of radioactive material specified in RH-904, Schedule E, for any authorized purpose. The possession limit for a Type B broad license, if only one radionuclide is possessed thereunder, is the quantity specified for that radionuclide in RH-904, Schedule E, Column I. If two or more radionuclides are possessed thereunder, the possession limit for each is determined as follows: For each radionuclide, determine the ratio of the quantity possessed to the applicable quantity specified in RH-904, Schedule E, Column I, for that radionuclide. The sum of the ratios for all radionuclides possessed under the license shall not exceed unity.

3. A "Type C specific license of broad scope" is a specific license authorizing receipt, acquisition, ownership, possession, use and transfer of any chemical or physical form of radioactive material specified in RH-904, Schedule E, for any authorized purpose. The possession limit for a Type C broad license, if only one radionuclide is possessed thereunder, is the quantity specified for that radionuclide in RH-904, Schedule E, Column II. If two or more radionuclides are possessed thereunder, the possession limit is determined for each as follows: For each radionuclide, determine the ratio of the quantity possessed to the applicable quantity specified in RH-904, Schedule E, Column II, for that radionuclide. The sum of the ratios for all radionuclides possessed under the license shall not exceed unity.

b. An application for a Type A specific license of broad scope will be approved if:

1. The applicant satisfies the general requirements specified in RH-404 of this Part;

2. The applicant has engaged in a reasonable number of activities involving the use of radioactive material; and

3. The applicant has established administrative controls and provisions relating to organization and management, procedures, record keeping, material control and accounting and management review that are necessary to assure safe operations, including:

   A. The establishment of a radiation safety committee composed of such persons as a radiological safety officer, a representative of management and persons trained and experienced in the safe use of radioactive materials;

   B. The appointment of a radiological safety officer who is qualified by training and experience in radiation protection and who is available for advice and assistance on radiological safety matters; and

   C. The establishment of appropriate administrative procedures to assure:

      i. Control of procurement and use of radioactive material;

      ii. Completion of safety evaluations proposed uses of radioactive material of which take into consideration such matters as the adequacy of facilities and equipment, training and experience of the user and the operating or handling procedures; and

      iii. Review, approval and recording by the radiation safety committee of safety evaluation of proposed uses prepared in accordance with Subdivision ii of this Subparagraph C prior to use of the radioactive material.

c. An application for a Type B specific license of broad scope will be approved if:

   1. The applicant satisfies the general requirements specified in RH-404 of this Part; and

   2. The applicant has established administrative controls and provisions relating to organization and management, procedures, record keeping, material control and accounting and management review that are necessary to assure safe operations, including:

A. The appointment of a radiological safety officer who is qualified by training and experience in radiation protection and who is available for advice and assistance on radiological safety matters; and

B. The establishment of appropriate administrative procedures to assure:

i. Control of procurement and use of radioactive material;

ii. Completion of safety evaluations of proposed uses of radioactive material which take into consideration such matters as the adequacy of facilities and equipment, training and experience of the user and the operating or handling procedures; and

iii. Review, approval and recording by the radiological safety officer of safety evaluations of proposed uses prepared in accordance with Subdivision ii of the Subparagraph B prior to use of the radioactive material.

d. An application for a Type C specific license of broad scope will be approved if:

1. The applicant satisfied the general requirements specified in RH-404 of this Part; and

2. The applicant submits a statement that radioactive material will be used only by or under the direct supervision of, individuals who have received:

A. A college degree at the bachelor level or equivalent training and experience in the physical or biological sciences or engineering in; and

B. At least forty (40) hours of training and experience in the safe handling of radioactive material and in the characteristics of ionizing radiation, units of radiation dose and quantities, radiation detection instrumentation and biological hazards of exposure to radiation appropriate to the type and forms of radioactive material to be used; and

3. The applicant has established administrative controls and provisions relating to procurement of radioactive material, procedures, record keeping, material control and accounting and management review necessary to assure safe operations.

e. Specific license of broad scope are subject to the following conditions:

1. Persons licensed pursuant to the RH-406 shall not:

A. Conduct tracer studies in the environment involving direct release of radioactive material;

B. Receive, acquire, own, possess, use or transfer devices containing 100,000 curies or more of radioactive material in sealed sources used for irradiation of materials;

C. Conduct activities for which a specific license issued by the Department under RH-405 of this Part is required; or

D. Add or cause the addition of radioactive material to any food, beverage, cosmetic, drug or other product designed for ingestion or inhalation by or application to, a human being.

2. Each Type A specific license of broad scope issued under this Part shall be subject to the condition that radioactive material possessed under the license may only be used by or under the direct supervision of, individuals approved by the licensee's radiation safety committee.

3. Each Type B specific license of broad scope issued under this Part shall be subject to the condition that radioactive material possessed under the license may only be used by or under the direct supervision of, individuals approved by the licensee's radiological safety officer.

4. Each Type C specific license of broad scope issued under this Part shall be subject to the condition that radioactive material possessed under the license may only be used by or under the direct supervision of, individuals who satisfy the requirements of Subparagraph d of this RH-406.

RH-407. Special Requirements for Land Disposal of Radioactive Waste

a. Each person shall file an application with the Department and obtain a license as provided in this Paragraph before commencing construction of a land disposal facility. Failure to comply with this requirement may be grounds for denial of a license.

b. Content of Application. An application to receive from others, possess and dispose of wastes containing or contaminated with radioactive material by land disposal must consist of general information, specific technical information, institutional information and financial information as set forth in this Paragraph. An environmental report prepared in accordance with Subpart A of 10 CFR Part 51 must accompany the application.

1. The general information must include each of the following:

A. Identity of the applicant including:

i. The full name, address, telephone number and description of the business or occupation of the applicant;

ii. If the applicant is a partnership, the name and address of each partner and the principal location where the partnership does business;

iii. If the applicant is a corporation or an unincorporated association, the state where it is incorporated or organized and the principal location where it does business and the names and addresses of its directors and principal officers; and

iv. If the applicant is acting as an agent or representative of another person in filing the application, all information required under this Paragraph must be supplied with respect to the other person.

B. Qualifications of the applicant:

i. The organizational structure of the applicant, both offsite and onsite, including a description of lines of authority and assignments of responsibilities, whether in the form of administrative directives, contract provisions, or otherwise;

ii. The technical qualifications, including training and experience, of the applicant and members of the applicant's staff to engage in the proposed activities. Minimum training and experience requirements for personnel filling key positions described in RH-407.b.1.B.i. must be provided;

iii. A description of the applicant's personnel training program; and

iv. The plan to maintain an adequate complement of trained personnel to carry out waste receipt, handling and disposal operations in a safe manner.

C. A description of:

i. The location of the proposed disposal site;

ii. The general character of the proposed activities;

iii. The types and quantities of radioactive waste to be received, possessed and disposed of;

iv. Plans for use of the land disposal facility for purposes other than disposal of radioactive wastes; and

v. The proposed facilities and equipment.

D. Proposed schedules for construction, receipt of waste and first emplacement of waste at the proposed land disposal facility.

2. The specific technical information must include the following information needed for demonstration that the performance objectives of Subpart c of this Paragraph and the applicable technical requirements of Subpart d of this Paragraph will be met:

A. A description of the natural and demographic disposal site characteristics as determined by disposal site selection and characterization activities. The description must include geologic, geotechnical, hydrologic, meteorologic, climatologic and biotic features of disposal site and vicinity.

B. A description of the design features of the land disposal facility and the disposal units. For near-surface disposal, the description must include those design features related to infiltration of water; integrity of covers for disposal units; structural stability of backfill, waste and covers; contact of wastes with standing water; disposal site drainage; disposal site closure and stabilization; elimination to the extent practicable of long-term disposal site maintenance; inadvertent intrusion; occupational exposures; disposal site monitoring; and adequacy of the size of the buffer zone for monitoring and potential mitigative measures.

C. A description of the principal design criteria and their relationship to the performance objectives.

D. A description of the design basis natural events or phenomena and their relationship to the principal design criteria.

E. A description of codes and standards which the applicant has applied to the design and which will apply to construction of the land disposal facilities.

F. A description of the construction and operation of the land disposal facility. The description must include as a minimum the methods of construction of disposal units; waste emplacement; the procedures for and areas of waste segregation; types of intruder barriers; onsite traffic and drainage systems; survey control program; methods and areas of waste storage; and methods to control surface water and groundwater access to the wastes. The description must also include a description of the methods to be employed in the handling and disposal of wastes containing chelating agents or other non-radiological substances that might affect meeting the performance objectives in Subpart C of this Paragraph.

G. A description of the disposal site closure plan, including those design features which are intended to facilitate disposal site closure and to eliminate the need for ongoing active maintenance.

H. An identification of the known natural resources at the disposal site, the exploitation of which could result in inadvertent intrusion into the low-level wastes after removal of active institutional control.

I. A description of the kind, amount, classification and specifications of the radioactive material proposed to be received, possessed and disposed of at the land disposal facility.

J. A description of the quality assurance program, tailored to LLW disposal, developed and applied by the applicant for the determination of natural disposal site characteristics and for quality assurance during the design, construction, operation and closure of the land disposal facility and the receipt, handling and emplacement of waste.

K. A description of the radiation safety program for control and monitoring of radioactive effluents to ensure compliance with the performance objective in RH-407.c.2. and occupational radiation exposure to ensure compliance with the requirements of Section 3 of these Regulations and to control contamination of personnel, vehicles, equipment, buildings and the disposal site. Both routine operations and accidents must be addressed. The program description must include procedures, instrumentation, facilities and equipment.

L. A description of the environmental monitoring program to provide data to evaluate potential health and environmental impacts and the plan for taking corrective measures if migration of radionuclides is indicated.

M. A description of the administrative procedures that the applicant will apply to control activities at the land disposal facility.

N. Technical analyses. The specific technical information must also include the following analyses needed to demonstrate that the performance objectives of Subpart c of this Paragraph will be met:

RH-407. (Cont'd)

i. Pathways analyzed in demonstrating protection of the general population from releases of radioactivity must include air, soil, groundwater, surface water, plant uptake and exhumation by burrowing animals. The analyses must clearly identify and differentiate between the roles performed by the natural disposal site characteristics and design features in isolating and segregating the wastes. The analyses must clearly demonstrate that there is reasonable assurance that the exposure to humans from the release of radioactivity will not exceed the limits set forth in RH-407.c.2.

ii. Analyses of the protection of individuals from inadvertent intrusion must include demonstration that there is reasonable assurance the waste classification and segregation requirements will be met and that adequate barriers to inadvertent intrusion will be provided.

iii. Analyses of the protection of individuals during operations must include assessments of expected exposures due to routine operations and likely accidents during handling, storage and disposal of waste. The analyses must provide reasonable assurance that exposures will be controlled to meet the requirements of Section 3 of these Regulations.

iv. Analyses of the long-term stability of the disposal site and the need for ongoing active maintenance after closure must be based upon analyses of active natural processes such as erosion, wasting, slope failure, settlement of mass wastes and backfill, infiltration through covers over disposal areas and adjacent soils and surface drainage of the disposal site. The analyses must provide reasonable assurance that there will not be a need for ongoing active maintenance of the disposal site following closure.

3. The institutional information must include:

   A. A certification by the Federal or State government which owns the disposal site that the Federal or State government is prepared to accept transfer of the license when the provisions of RH-407.b.7. are met and will assume responsibility for custodial care after site closure and post-closure observation and maintenance.

   B. Where the proposed disposal site is on land not owned by the Federal or a State government, the applicant must submit evidence that arrangements have been made for assumption of ownership in fee by the Federal or a State government before the Department issues a license.

4. The financial information must be sufficient to demonstrate that the financial qualifications of the applicant are adequate to carry out the activities for which the license is sought and meet other financial assurance requirements as specified in Subpart e of this Part.

5. Any expiration date on a license applies only to the above ground activities and to the authority to dispose of waste. Failure to renew the license shall not relieve the licensee of responsibility for carrying out site closure, post-closure observation and transfer of the license to the site owner. An application for renewal or an application for closure must be filed at least thirty (30) days prior to license expiration.

6. Contents of a application for closure.

   A. Prior to final closure of the disposal site or as otherwise directed by the Department, the applicant shall submit an application to amend the license for closure. This closure application must include a final revision and specific details of the disposal site closure plan included as part of the license application submitted under RH-407.b.2.G. that includes each of the following:

      i. Any additional geologic, hydrologic or other disposal site data pertinent to the long-term containment of emplaced radioactive wastes obtained during the operational period.

ii. The results of tests, experiments or other analyses relating to backfill of excavated areas, closure and sealing, waste migration and interaction with emplacement media, or any other tests, experiments or analysis pertinent to the long-term containment of emplaced waste within the disposal site.

iii. Any proposed revision of plans for:

Decontamination and/or dismantlement of surface facilities;

Backfilling of excavated areas; or

Stabilization of the disposal site for post-closure care.

B. An environmental report or a supplement to an environmental report prepared in accordance with Subpart A of 10 CFR, Part 51 must accompany the application.

C. Upon review and consideration of an application to amend the license for closure submitted in accordance with Subparagraph G.4 of this Paragraph, the Department shall issue an amendment authorizing closure if there is reasonable assurance that the long-term performance objectives of Subpart c of this Paragraph will be met.

D. Following completion of closure authorized in RH-407.b.6, the licensee shall observe, monitor and carry out necessary maintenance and repairs at the disposal site until the license is transferred by the Department in accordance with RH-407.b.7. Responsibility for the disposal site must be maintained by the licensee for five (5) years. A shorter or longer time period for post-closure observation and maintenance may be established and approved as part of the site closure plan, based on site-specific conditions.

7. Transfer of license. Following closure and the period of post-closure observation and maintenance, the licensee may apply for an amendment to transfer the license to the disposal site owner. The license shall be transferred when the Department finds:

RH-407. (Cont'd)

A. That the closure of the disposal site has been made in conformance with the licensee's disposal site closure plan, as amended and approved as part of the license;

B. That reasonable assurance has been provided by the licensee that the performance objectives of Subpart c of this Paragraph are met;

C. That any funds and necessary records for care will be transferred to the disposal site owner;

D. That the post-closure monitoring program is operational for implementation by the disposal site owner; and

E. That the Federal or State government agency which will assume responsibility for institutional control of the disposal site is prepared to assume responsibility and ensure that the institutional requirements found necessary under RH-407.d.10.B will be met.

c. Performance Objectives

1. General requirement. Land disposal facilities must be sited, designed, operated, closed and controlled after closure so that reasonable assurance exists that exposures to humans are within the limits established in the performance objectives in RH-407.c.2 through 5.

2. Protection of the general population from releases of radioactivity. Concentrations of radioactive material which may be released to the general environment in ground water, surface water, air, soil, plants or animals must not result in an annual dose exceeding an equivalent of 25 millirems to the whole body, 75 millirems to the thyroid and 25 millirems to any other organ of any member of the public. Reasonable effort should be made to maintain releases of radioactivity in effluents to the general environment as low as is reasonably achievable.

3. Protection of individuals from inadvertent intrusion. Design, operation and closure of the land disposal facility must ensure protection of any individual inadvertently intruding into the disposal site and occupying the site or contacting the waste at any time after active institutional controls over the disposal site are removed.

4. Protection of individuals during operations. Operations at the land disposal facility must be conducted in compliance with the standards for radiation protection set out in Section 3 of these Regulations, except for releases of radioactivity in effluents from the land disposal facility which shall be governed by RH-407.c.2. Every reasonable effort shall be made to maintain radiation exposures as low as is reasonably achievable.

5. Stability of the disposal site after closure. The disposal facility must be sited, designed, used, operated and closed to achieve long-term stability of the disposal site and to eliminate to the extent practicable the need for ongoing active maintenance of the disposal site following closure so that only surveillance, monitoring or minor custodial care are required.

d. Technical Requirements for Land Disposal Facilities.

1. Disposal site suitability for near-surface disposal.

A. The purpose of this section is to specify the minimum characteristics a disposal site must have to be acceptable for use as a near-surface disposal facility. The primary emphasis in disposal site suitability is given to isolation of wastes, a matter having long-term impacts and to disposal site features that ensure that the long-term performance objectives of Subpart c of this Paragraph are met, as opposed to short-term convenience or benefits.

B. The disposal site shall be capable of being characterized, modeled, analyzed and monitored.

C. Within the region or state where the facility is to be located, a disposal site should be selected so that projected population growth and future developments are not likely to affect the ability of the disposal facility to meet the performance objectives of Subpart c of this Paragraph.

D. Areas must be avoided having known natural resources which, if exploited, would result in failure to meet the performance objectives of Subpart c of this Paragraph.

E. The disposal site must be generally well drained and free of areas of flooding or frequent ponding. Waste disposal shall not take place in a 100-year flood plain, coastal high-hazard area or wetland.

F. Upstream drainage areas must be minimized to decrease the amount of runoff which could erode or inundate waste disposal units.

G. The disposal site must provide sufficient depth to the water table that ground water intrusion, perennial or otherwise, into the waste will not occur. The Department will consider an exception to this requirement to allow disposal below the water table if it can be conclusively shown that disposal site characteristics will result in molecular diffusion being the predominant means of radionuclide movement and the rate of movement will result in the performance objectives of Subpart c of this Paragraph being met. In no case will waste disposal be permitted in the zone of fluctuation of the water table.

H. The hydrogeologic unit used for disposal shall not discharge ground water to the surface within the disposal site.

I. Areas must be avoided where tectonic processes such as faulting, folding, seismic activity or vulcanism may occur with such frequency and extent to significantly affect the ability of the disposal site to meet the performance objectives of Subpart c of this Paragraph or may preclude defensible modeling and prediction of long-term impacts.

J. Areas must be avoided where surface geologic processes such as mass wasting, erosion, slumping, land-sliding or weathering occur with such frequency and extent to significantly affect the ability of the disposal site to meet the performance objectives of Subpart c of this Paragraph or may preclude defensible modeling and prediction of long-term impacts.

K. The disposal site must not be located where nearby facilities or activities could adversely impact the ability of the site to meet the performance objectives of Subpart c of this Paragraph or significantly mask the environmental monitoring program.

2. Disposal site design for near-surface disposal.

   A. Site design features must be directed toward long-term isolation and avoidance of the need for continuing active maintenance after site closure.

   B. The disposal site design and operation must be compatible with the disposal site closure and stabilization plan and lead to disposal site closure that provides reasonable assurance the performance objectives of Subpart c of this Paragraph will be met.

   C. The disposal site must be designed to complement and improve, where appropriate, the ability of the disposal site's natural characteristics to assure that the performance objectives of Subpart c of this Paragraph will be met.

   D. Covers must be designed to minimize to the extent practicable water infiltration, to direct percolating or surface water away from the disposed waste and to resist degradation by surface geologic processes and biotic activity.

   E. Surface features must direct surface water drainage away from disposal units at velocities and gradients which will not result in erosion that will require ongoing active maintenance in the future.

   F. The disposal site must be designed to minimize to the extent practicable the contact of water with waste during storage, the contact of standing water with waste during disposal and the contact of percolating or standing water with wastes after disposal.

3. Near-surface disposal facility operation and disposal site closure.

   A. Wastes designated as Class A pursuant to RH-407.d.6, must be segregated from other wastes by placing in disposal units which are sufficiently separated from disposal units for the other waste classes so that any interaction between Class A wastes and other wastes will not result in the failure to meet the performance objectives in Subpart c of this Paragraph. This segregation is not necessary for Class A wastes if they meet the stability requirements in RH-407.d.7.B of this Part.

B. Wastes designated as Class C pursuant to RH-407.d.6 must be disposed of so that the top of the waste is a minimum of 5 meters below the top surface of the cover or must be disposed of with intruder barriers that are designed to protect against an inadvertent intrusion for at least 500 years.

C. All wastes shall be disposed of in accordance with the requirements of RH-407.d.3.D through K.

D. Wastes must be emplaced in a manner that maintains the package integrity during emplacement, minimizes the void spaces between packages and permits the void spaces to be filled.

E. Void spaces between waste packages must be filled with earth or other material to reduce future subsidence within the fill.

F. Waste must be placed and covered in a manner that limits the radiation dose rate at the surface of the cover to levels that at a minimum will permit the licensee to comply with all provisions of RH-1208 at the time the license is transferred pursuant to RH-407.b.7.

G. The boundaries and locations of each disposal unit (e.g., trenches) must be accurately located and mapped by means of a land survey. Near-surface disposal units must be marked in such a way that the boundaries of each unit can be easily defined. Three (3) permanent survey marker control points, referenced to United States Geological Survey (USGS) or National Geodetic Survey (NGS) survey control stations, must be established in the site to facilitate surveys. The USGS or NGS control stations must provide horizontal and vertical controls as checked against USGS or NGS record files.

H. Buffer zone of land must be maintained between any buried waste and the disposal site boundary and beneath the disposed waste. The buffer zone shall be of adequate dimensions to carry out environmental monitoring activities specified in RH-407.d.4 and take mitigative measures if needed.

I. Closure and stabilization measures as set forth in the approved site closure plan must be carried out as each disposal unit (e.g., each trench) is filled and covered.

J. Active waste disposal operations must not be have an adverse effect on completed closure and stabilization measures.

K. Only wastes containing or contaminated with radioactive materials shall be disposed of at the disposal site.

4. Environmental monitoring.

A. At the time a license application is submitted, the applicant shall have conducted a preoperational monitoring program to provide basic environmental data on the disposal site characteristics. The applicant shall obtain information about the ecology, meteorology, climate, hydrology, geology, geochemistry and seismology of the disposal site. For those characteristics that are subject to variation, data must cover at least a twelve (12) month period.

B. The licensee must have plans for taking corrective measures if migration of radionuclides would indicate that the performance objectives of Subpart c may not be met.

C. During the land disposal facility site construction and operation, the licensee shall maintain a monitoring program. Measurements and observations must be made and recorded to provide data to evaluate the potential health and environmental impacts during both the construction and the operation of the facility and to enable the evaluation of long-term effects and the need for mitigative measures The monitoring system must be capable of providing early warning of releases of radionuclides from the disposal site before they leave the site boundary.

D. After the disposal site is closed, the licensee responsible for post-operational surveillance of the disposal site shall maintain a monitoring system based on the operating history and the closure and stabilization of the disposal site.

The monitoring system must be capable of providing early warning of releases of radionuclides from the disposal site before they leave the site boundary.

5. The Department may, upon request or on its own initiative, authorize provisions other than those set forth in RH-407.d.2 through 4 for the segregation and disposal of waste and for the design and operation of a land disposal facility on a specific basis, if it finds reasonable assurance of compliance with the performance objectives of Subpart c of this Paragraph.

6. Classification of waste for near-surface disposal. Determination of the classification of radioactive, waste involves two considerations. First, consideration must be given to the concentration of long-lived radionuclides (and their shorter-lived precursors) whose potential hazard will persist long after such precautions as institutional controls, improved waste form and deeper disposal have ceased to be effective. These precautions delay the time when long-lived radionuclides could cause exposures. In addition, the magnitude of the potential dose is limited by the concentration and availability of the radionuclide at the time of exposure. Second, consideration must be given to the concentration of shorter-lived radionuclides for which requirements on institutional controls, waste form and disposal methods are effective.

A. Classes of waste:

i. Class A waste is waste that is usually segregated from other waste classes at the disposal site. The physical form and characteristics of Class A waste must meet the minimum requirements set forth in RH-407.d.7.A. If Class A waste also meets the stability requirements set forth in RH-407.d.7.B, it is not necessary to segregate the waste for disposal.

ii. Class B waste is waste that must meet more rigorous requirements on waste form to ensure stability after disposal. The physical form and characteristics of Class B waste must meet both the minimum and stability requirements set forth in RH-407.d.7.

iii. Class C waste is waste that not only must meet more rigorous requirements waste form to ensure stability but also on requires additional measures at the disposal facility to protect against inadvertent intrusion. The physical form and characteristics of Class C waste must meet both the minimum and stability requirements set forth in RH-407.d.7.

iv. Waste that is not generally acceptable or near-surface disposal is waste for which waste form and disposal methods must be different and in general more stringent, than those specified for Class C waste. In the absence of specific requirements in this Part, proposals for disposal of this waste may be submitted to the Department for approval, pursuant to RH-407.d.9 of this Part.

B. Classification determined by long-lived radionuclides. If radioactive waste contains only radionuclides listed in Table 1, classification shall be determined as follows:

i. If the concentration does not exceed 0.1 times the value in Table 1, the waste is Class A.

ii If the concentration exceeds 0.1 times the value in Table 1 but does not exceed the value in Table 1, the waste is Class C.

iii. If the concentration exceeds the value in Table 1, the waste is not generally acceptable for near-surface disposal.

iv. For wastes containing mixtures of radionuclides listed in Table 1, the total concentration shall be determined by sum of fractions rule described in the RH-407.d.6.F.

TABLE 1.

Radionuclide	Concentration, curies per cubic meter
C-14	8
C-14 in activated metal	80
Ni-59 in activated metal	220
Nb-94 in activated metal	0.2
Tc-99	3
I-129	0.08
Alpha emitting transuranic nuclides with half-life greater than five years	[1]100
Pu-241	[1]3,500
Cm-242	[1]20,000

[1]Units are nanocuries per gram.

C. Classification determined by short-lived radionuclides. If radioactive waste does not contain any of the radionuclides listed in Table 1, classification shall be determined based on the concentrations shown in Table 2. However, as specified in RH-407.d.6.E of this Section, if radioactive waste does not contain any nuclides listed in either Table 1 or 2, it is Class A.

i. If the concentration exceeds the value in Column 1, the waste is Class A.

ii. If the concentration exceeds the value in Column 1, but does not exceed the value in Column 2, the waste is Class B.

iii. If the concentration exceeds the value in Column 2, but does not exceed the value in Column 3, the waste is Class C.

iv. If the concentration exceeds the value in Column 3, the waste is not generally acceptable for near-surface disposal.

v. For wastes containing mixtures of the nuclides listed in Table 2, the total concentration shall be determined by the sum of fractions rule described in RH-407.d.6.F.

TABLE 2.

Radionuclide	Concentration, curies per cubic meter		
	Col. 1	Col. 2	Col. 3
Total of all nuclides less than 5 year half life	700	(1)	(1)
H-3	40	(1)	(1)
Co-60	700	(1)	(1)
Ni-63	3.5	70	700
Ni-63 in activated metal	35	700	7000
Sr-90	0.04	150	7000
Cs-137	1	44	4600

[1] There are no limits established for these radionuclides in Class B or C wastes. Practical consideration such as the effects of external radiation and internal heat generation on transportation, handling and disposal will limit the concentrations for these wastes. These wastes shall be Class B unless the concentrations of other nuclides in Table 2 determine the waste to the Class C independent of these nuclides.

D. Classification determined by both long and short-lived radionuclides. If radioactive waste contains a mixture of radionuclides, some of which are listed in Table 1 and some of which are listed in Table 2, classification shall be determined as follows:

i. If the concentration of a nuclide listed in Table 1 does not exceed 0.1 times the value listed in Table 1, the class shall be that determined by the concentration of nuclides listed in Table 2.

ii. If the concentration of a nuclide listed in Table 1 exceeds 0.1 times the value listed in Table 1 but does not exceed the value in Table 1, the waste shall be Class C, provided the concentration of nuclides listed in Table 2 does not exceed the value shown in Column 3 of Table 2.

RH-407. (Cont'd)

E. Classification of wastes with radionuclides other than those listed in Tables 1 and 2. If radioactive waste does not contain any nuclides listed in either Table 1 or 2, it is Class A.

F. The sum of the fractions rule for mixtures of radionuclides. For determining classification for waste that contains a mixture of radionuclides, it is necessary to determine the sum of fractions by dividing each nuclide's concentration by the appropriate limit and adding the resulting values. The appropriate limits must all be taken from the same column of the same table. The sum of the fractions for the column must be less than 1.0 if the waste class is to be determined by that column. Example: A waste contains Sr-90 in a concentration of 50 Ci/m^3 and Cs-137 in a concentration of 22 Ci/m^3. Since the concentrations both exceed the values in Column1, Table 2, they must be compared to Column 2 values. For Sr-90 fraction 50/150 = 0.33; for Cs-137 fraction, 22/44 = 0.5; the sum of the fractions = 0.83. Since the sum is less than 1.0, the waste is Class B.

G. Determination of concentrations in wastes. The concentration of a radionuclide may be determined by indirect methods such as use of scaling factors which relate the inferred concentration of one radionuclide to another that is measured, or radionuclide material accountability, if there is reasonable assurance that the indirect methods can be correlated with actual measurements. The concentration of a radionuclide may be averaged over the volume of the waste or weight of the waste if the units are expressed as nanocuries per gram.

7. Waste characteristics.

A. The following requirements are minimum requirements for all classes of waste and are intended to facilitate handling at the disposal site and provide protection of health and safety of personnel at the disposal site.

i. Waste must not be packaged for disposal in cardboard or fiberboard boxes.

ii. Liquid waste must be solidified or packaged in sufficient absorbent material to absorb twice the volume of the liquid.

iii. Solid waste containing liquid shall contain as little freestanding and noncorrosive liquid as is reasonably achievable, but in no case shall the liquid exceed 1% of the volume.

iv. Waste must not be readily capable of detonation or of explosive decomposition or reaction at normal pressures and temperatures, or of explosive reaction with water.

v. Waste must not contain or be capable of generating, quantities of toxic gases, vapors or fumes harmful to persons transporting, handling or disposing of the waste. This does not apply to radioactive gaseous waste packaged in accordance with RH-407.d.6.G.

vi. Waste must not be pyrophoric. Pyrophoric materials contained in waste shall be treated, prepared and packaged to be nonflammable.

vii. Waste in a gaseous form must be packaged at a pressure that does not exceed 1.5 atmospheres at 20^0 C. Total activity must not exceed 100 curies per container.

viii. Waste containing hazardous, biological pathogenic or infectious material must, be treated to reduce to the maximum extent practicable the potential hazard from the non-radiological materials.

B. The requirements in this Section are intended to provide stability of the waste. Stability is intended to ensure that the waste does not structurally degrade and affect overall stability of the site through slumping, collapse or other failure of the disposal unit and thereby lead to water infiltration. Stability is also a factor in limiting exposure to an inadvertent intruder, since it provides a recognizable and nondispersible waste.

i. Waste must have a structural stability. A structurally stable waste form will generally maintain its physical dimensions and its form, under the expected disposal conditions such as weight of overburden and compaction equipment, the presence of moisture and microbial activity, and internal factors such as radiation effects and chemical changes. Structural stability can be provided by the waste form itself, processing the waste to a stable form or placing the waste in a disposal container or structure that provides stability after disposal.

ii. Notwithstanding the provisions in RH-407.d.7.A.ii and iii, liquid wastes or wastes containing liquid, must be converted into a form that contains as little freestanding and noncorrosive liquid as is reasonably achievable, but in no case shall the liquid exceed 1% of the volume of the waste when the waste is in a disposal container designed to ensure stability, or 0.5% of the volume of the waste for waste processed to a stable form.

iii. Void spaces within the waste and between the waste and its package must be reduced to the extent practicable.

8. Each package must be clearly labeled to identify whether it is Class A waste, Class B waste or Class C waste in accordance with RH-407.d.6.

9. The Department may, upon request or on its own initiative, authorize other provisions for the classification and characteristics of waste on a specific basis, if, after evaluation of the specific characteristics of the waste, disposal site, and method of disposal, it finds reasonable assurance of compliance with the performance objectives in Subpart c of this Paragraph.

10. Institutional requirements.

A. Land ownership. Disposal of radioactive waste received from other persons may be permitted only on land owned in fee by the Federal or a State government.

B. Institutional control. The land owner or custodial agency shall carry out an institutional control program to physically control access to the disposal site following transfer of control of the disposal site from the disposal site operator. The institutional control program must also include, but not be limited to, carrying out an environmental monitoring program at the disposal site, periodic surveillance, minor custodial care and other requirements as determined by the Department, and administration of funds to cover the costs for these activities. The period of institutional controls will be determined by the Department, but institutional controls may not be relied upon for more than 100 years following transfer of control of the disposal site to the owner.

e. Funding for Disposal Site Closure and Stabilization.

1. The applicant shall provide assurance that sufficient funds will be available to carry out disposal site closure and stabilization, including decontamination or dismantlement of land disposal facility structures; and closure and stabilization of the disposal site so that following transfer of the disposal site to the site owner, the need for ongoing active maintenance is eliminated to the extent practicable and only minor custodial care, surveillance and monitoring are required. These assurances shall be based on Department-approved cost estimates reflecting the Department-approved plan for disposal site closure and stabilization. The applicant's cost estimates must take into account total capital costs that would be incurred if an independent contractor were hired to perform the closure and stabilization work.

2. In order to avoid unnecessary duplication and expense, the Department will accept financial sureties that have been consolidated with earmarked financial or surety arrangements established to meet requirements of other Federal or State agencies and/or local governing bodies for such decontamination, closure and stabilization. The Department will accept this arrangement only if they are considered adequate to satisfy these requirements and that the portion of the surety which covers the closure of the disposal site is clearly identified and committed for use in accomplishing these activities.

3. The licensee's surety mechanism will be annually reviewed by the Department to assure that sufficient funds are available for completion of the closure plan, assuming that the work has to be performed by an independent contractor.

4. The amount of surety liability should change in accordance with the predicted cost of future closure and stabilization. Factors affecting closure and stabilization cost estimates include inflation; increases in the amount of disturbed land; changes in engineering plans; closure and stabilization that has already been accomplished and any other conditions affecting costs. This will yield a surety that is at least sufficient at all times to cover the costs of closure of the disposal units that are expected to be used before the next license renewal.

5. The term of the surety mechanism must be open-ended unless it can be demonstrated that another arrangement would provide an equivalent level of assurance. This assurance could be provided with a surety mechanism which is written for a specified period of time (e.g., five years) yet which must be automatically renewed unless the party who issues the surety notifies the Department and the beneficiary (the licensee) not less than 90 days prior to the renewal date of its intention not to renew. In such a situation the licensee must submit a replacement surety within thirty (30) days after notification of cancellation. If the licensee fails to provide a replacement surety acceptable to the Department, the site owner may collect on the original surety.

6. Proof of forfeiture must not be necessary to collect the surety so that in the event that the licensee could not provide an acceptable replacement surety within the required time, the surety shall be automatically collected prior to its expiration. The conditions described above would have to be clearly stated on any surety instrument which is not open-ended and must be agreed to by all parties. Liability under the surety mechanism must remain in effect until the closure and stabilization program has been completed and approved by the Department and the license has been transferred to the site owner.

RH-407. (Cont'd)

7. Financial surety arrangements generally acceptable to the Department include surety bonds, cash deposits, certificates of deposits, deposits of government securities, escrow accounts, irrevocable letters or lines of credit, trust funds and combinations of the above or such other types of arrangements as may be approved by the Department. However, self-insurance or any arrangement which essentially constitutes pledging the assets of the licensee, will not satisfy the surety requirement for private sector applicants since this provides no additional assurance other than that which already exists through license requirements.

RH-408. Issuance of Specific Licenses.

a. Upon a determination that an application meets the requirements of the Act and these Regulations of the Department, the Department will issue a specific license authorizing the proposed activity in such form and containing such conditions and limitations as it deems appropriate and necessary to effectuate the purposes of the Act.

b. The Department may incorporate in any license at the time of issuance or thereafter by appropriate rule, regulation or order, such additional requirements and conditions with respect to the licensee's receipt, possession, use and transfer of licensed material as it deems appropriate or necessary in order to:

1. Protect health or to minimize danger to life or property;

2. Require such reports and the keeping of such records and to provide for such inspection of activities under the license as may be necessary or appropriate to effectuate the purposes of the Act and these Regulations thereunder; and

3. Prevent loss or theft of licensed material.

RH-409. Specific Terms and Conditions of Licenses.

a. Each license issued pursuant to these Regulations shall be subject to all the provisions of the Act now or hereafter in effect and to all rules, regulations and orders of the Department.

b. No license issued or granted under this Part and no right to possess or utilize radioactive material granted by any license issued pursuant to this Part shall be transferred, assigned or in any manner disposed of, either voluntarily or involuntarily, directly or indirectly, through transfer of control of any license to any person unless the Department shall, after securing full information find that the transfer is in accordance with the provisions of the Act and shall give its consent in writing.

c. Each person licensed by the Department pursuant to these Regulations shall confine their use and possession of the material licensed to the locations and purposes authorized in the license. Except as otherwise provided in the license, a license issued pursuant to these Regulations in Section 2, shall carry with it the right to receive, acquire, own and possess radioactive material. Preparation for shipment and transport of radioactive material shall be in accordance with the provisions of Section 4 of these Regulations.

d. The Department may incorporate, in any license issued pursuant to Section 2 of these Regulations, at the time of issuance or thereafter by appropriate rule, regulation or order, such additional requirements and conditions with respect to the licensee's receipt, possession, use and transfer of radioactive material as it deems appropriate or necessary in order to:

1. Protect health or to minimize danger to life or property;

2. Require such reports and the keeping of such records and to provide for such inspections of activities under the license as may be necessary or appropriate to effectuate the purposes of the Act and these Regulations thereunder.

e. Each licensee shall notify the Department in writing when the licensee decides to permanently discontinue all activities involving materials authorized under the license. This notification requirement applies to all specific licenses issued under Section 2 of these Regulations.

f. Licensees required to submit emergency plans by RH-403.g shall follow the emergency plan approved by the Department. Proposed changes to the plan may not be implemented without prior application to and prior approval by the Department.

g. Bankruptcy notification.

1. Each licensee shall notify the Department, in writing, immediately following the filing of a voluntary or involuntary petition for bankruptcy under any Chapter of Title II (Bankruptcy) of the United States Code by or against:

A. the licensee;

B. an entity (as that term is defined in 11 U.S.C. 101 (14)) controlling the licensee or listing the license or licensee as property of the estate; or

C. an affiliate (as that term is defined in 11 U.S.C. 101(2)) of the licensee.

2. This notification must indicate:

A. the bankruptcy court in which the petition for bankruptcy was filed; and,

B. the date of the filing of the petition.

h. Financial assurance and record keeping for decommissioning.

1. Each applicant for a specific license authorizing the possession and use of unsealed radioactive material of half-life greater than 120 days and in quantities exceeding 10^5 times the applicable quantities set forth in RH-2300, Appendix B, shall submit a decommissioning funding plan as described in RH-409.h.5 of this section. The decommissioning funding plan must also be submitted when a combination of isotopes is involved if R divided by10^5 is greater than 1 (unity rule), where R is defined here as the sum of the ratios of the quantity of each isotope to the applicable value in Appendix B.

2. Each applicant for a specific license authorizing possession and use of radioactive material of half-life greater than 120 days and in quantities specified in RH-409.h.4 of this section shall either:

A. Submit a decommissioning funding plan as described in RH-409.h.5 of this section; or

B. Submit a certification that financial assurance for decommissioning has been provided in the amount prescribed by RH-409.h.4 of this section using one of the methods described in RH-409.h.6 of this section. For an applicant, this certification may state that the appropriate assurance will be obtained after the application has been approved and the license issued but prior to the receipt of licensed material. As part of the certification, a copy of the financial instrument obtained to satisfy the requirements of RH-409.h.6 of this section is to be submitted to the Department.

3. A. Each holder of a specific license issued on or after July 27, 1993, which is of a type described in RH-409.h.1 of this section, shall provide financial assurance for decommissioning in accordance with the criteria set forth in this section.

B. Each holder of a specific license issued before July 27, 1993, and of a type described in RH-409.h.3 of this section shall submit, on or before July 27, 1993, a decommissioning funding plan or a certification of financial assurance for decommissioning in an amount at least equal to $750,000 in accordance with the criteria set forth in this section. If the licensee submits the certification of financial assurance rather than a decommissioning funding plan at this time, the licensee shall include a decommissioning funding plan in any application for license renewal.

C. Each holder of a specific license issued before July 27, 1993, and of a type described in RH-409.h.2 of this section shall submit, on or before July 27, 1993, a certification of financial assurance for decommissioning or a decommissioning funding plan in accordance with the criteria set forth in this section.

4. Table of required amounts of financial assurance for decommissioning by quantity of material.

   Greater than 10^4 but less than or equal to 10^5 times the applicable quantities of Appendix B of RH-2300 in unsealed form. (For a combination of isotopes, if R, as defined in RH-409.h.1 divided by 10^4 is greater than 1 but R divided by 10^5 is less than or equal to 1.) $750,000

   Greater than 10^3 but less than or equal to 10^4 times the applicable quantities of Appendix B of RH-2300 in unsealed form. (For a combination of isotopes, if R, as defined RH-409.h.1. divided by 10^3 is greater than 1 but R divided by 10^4 is less than or equal to 1.). $150,000

   Greater than 10^{10} times the applicable quantities of Appendix B of RH-2300 in sealed sources or plated foils. (For a combination of isotopes, if R, as defined in RH-409.h.1., divided by10^{10} is greater than 1.) ..... $ 75,000

5. The decommissioning funding plan must also contain a certification by the licensee that financial assurance for decommissioning has been provided in the amount of the cost estimate for decommissioning and a signed original of the financial instrument obtained to satisfy the requirements of RH-409.h.6.

6. Financial assurance for decommissioning must be provided by one or more of the following methods:

   A. Prepayment. Prepayment is the deposit prior to the start of operation into an account segregated from licensee assets and outside the licensee's administrative control of cash or liquid assets such that the amount of funds would be sufficient to pay decommissioning costs. Prepayment may be in the form of a trust, escrow account, government fund, certificate of deposit, or deposit of government securities.

B. A surety method, insurance, or other guarantee method. These methods guarantee that decommissioning costs will be paid. A surety method may be in the form of a surety bond, letter of credit, or line of credit. A parent company guarantee of funds for decommissioning costs based on a financial test may be used if the guarantee and test are as contained in Appendix A of this Part. A parent company guarantee may not be used in combination with other financial methods to satisfy the requirements of this Section.

For commercial corporations that issue bonds, a guarantee of funds by the applicant or licensee for decommissioning costs based on a financial test may be used if the guarantee and test are as contained in Appendix B of this Section. For commercial corporations that do not issue bonds, a guarantee of funds by the applicant or licensee for decommissioning costs may be used if the guarantee and test are as contained in Appendix C of this Section. For nonprofit entities, such as colleges, universities, and nonprofit hospitals, a guarantee of funds by the applicant or licensee may be used if the guarantee and test are as contained in Appendix D of this Section.

A guarantee of funds by the applicant or licensee for decommissioning costs based on a financial test may be used if the guarantee and test are contained in Appendix B of this Part. A guarantee by the applicant or licensee may not be used in combination with any other financial methods to satisfy the requirements of this Section or in any situation where the applicant or licensee has a parent company holding majority control of the voting stock of the company. Any surety method or insurance used to provide financial assurance for decommissioning must contain the following conditions:

i. The surety method or insurance must be open-ended or, if written for a specified term, such as five (5) years, must be renewed automatically unless ninety (90) days or more prior to the renewal date, the issuer notifies the Department, the beneficiary, and the licensee of its intention not to renew. The surety method or insurance must also provide that the full face amount be paid to the beneficiary automatically prior to the expiration without proof of forfeiture if the licensee fails to provide a replacement acceptable to the Department within thirty (30) days after receipt of notification of cancellation.

ii. The surety method or insurance must be payable to a trust established for decommissioning costs. The trustee and trust must be acceptable to the Department. An acceptable trustee includes an appropriate State or Federal government agency or an entity which has the authority to act as a trustee and whose trust operations are regulated and examined by a Federal or State agency.

iii. The surety method or insurance must remain in effect until the Department has terminated the license.

C. An external sinking fund in which deposits are made at least annually, coupled with a surety method or insurance, the value of which may decrease by the amount being accumulated in the sinking fund. An external sinking fund is a fund established and maintained by setting aside funds periodically in an account segregated from licensee assets and outside the licensee's administrative control in which the total amount of funds would be sufficient to pay decommissioning costs at the time termination of operation is expected. An external sinking fund may be in the form of a trust, escrow account, government fund, certificate of deposit, or deposit of government securities. The surety or insurance provisions must be as stated in RH-409.h.6.B.

D. In the case of State or local government licensees, a statement of intent containing a cost estimate for decommissioning or an amount based on the Table in RH-409.h.4 of this Section, and indicating that funds for decommissioning will be obtained when necessary.

E. When a governmental entity is assuming custody and ownership of a site, an arrangement by such governmental entity.

7. Each person licensed under Section 2 shall keep records of information important to decommissioning of the facility in an identified location until the site is released for unrestricted use. Before licensed activities are transferred or assigned in accordance with RH-409.b., licensees shall transfer all records described in this paragraph to the new licensee. In this case, the new licensee will be responsible for maintaining these records until the license is terminated. If records important to the decommissioning of a facility are kept for other purposes, reference to these records and their locations may be used. Information the Department considers important to decommissioning consists of:

A. Records of spills or other unusual occurrences involving the spread of contamination in and around the facility, equipment, or site. These records may be limited to instances when contamination remains after ay cleanup procedures or when there is reasonable likelihood that contaminants may have spread to inaccessible areas as in the case of possible seepage into porous materials such as concrete. These records must include any known information on identification of involved nuclides, quantities, forms, and concentrations.

B. As-built drawings and modifications of structures and equipment in restricted areas where radioactive materials are used and/or stored, and of locations of possible inaccessible contamination such as buried pipes which may be subject to contamination. If required drawings are referenced, each relevant document need not be indexed individually. If drawings are not available the licensee shall substitute appropriate records of available information concerning these areas and locations.

C. Except for areas containing only sealed sources (provided the sources have not leaked and no contamination remains after any leak) or radioactive materials having only half-lives of less than sixty-five (65) days, a list contained in a single document and updated every two (2) years, consisting of the following:

i. All areas designed and formerly designated restricted areas as defined in RH-1100;

ii. All areas outside of restricted areas that require documentation under RH-409.h.7.A;

iii. All areas outside of restricted areas where current and previous wastes have been buried as documented under RH-1500.g;

iv. All areas outside of restricted areas which contain material such that, if the license expired, the licensee would be required to either decontaminate to meet the criteria for decommissioning in RH-410 or apply for approval for disposal under RH-1401.

D. Records of the cost estimate performed for the decommissioning funding plan or of the amount certified for decommissioning and records of the funding method used for assuring funds if either a funding plan or certification is used.

RH-410. Expiration and Termination of Licenses and Decommissioning of Sites and Separate Buildings or Outdoor Areas.

a. Except as provided in Part D, RH-411.b, each specific license shall expire at the end of the day, in the month and year stated therein.

b. Each specific license revoked by the Department expires with the Department's final determination to revoke the license, or the expiration date stated in the determination, or as otherwise provided by Department Order.

c. Each specific license continues in effect, beyond the expiration date if necessary, with respect to possession of radioactive material until the Department notifies the licensee in writing that the license is terminated. During this time, the licensee shall:

1. Limit actions involving radioactive material to those related to decommissioning; and

2. Continue to control entry to restricted areas until they are suitable for release in accordance with Department requirements.

d. Within sixty (60) days of the occurrence of any of the following, each licensee shall provide notification to the Department in writing of such occurrence, and either begin decommissioning its site, or any separate building or outdoor area that contains residual radioactivity so that the building or outdoor area is suitable for release in accordance with Department requirements, or submit within twelve (12) months of notification a decommissioning plan, if required by RH-410.f., and begin decommissioning upon approval of that plan if:

1. The license has expired pursuant to RH-410.a; or RH-410.b.;or

2. The licensee has decided to permanently cease principal activities, as defined in this Part, at the entire site or in any separate building or outdoor area that contains residual radioactivity such that the building or outdoor area is unsuitable for release in accordance with Department requirements; or

3. No principal activities under the license have been conducted for a period of twenty-four (24) months; or

4. No principal activities have been conducted for a period of twenty-four (24) months in any separate building or outdoor area that contains residual radioactivity such that the building or outdoor area is unsuitable for release in accordance with Department requirements.

e. Coincident with the notification required by RH-410.c., the licensee shall maintain in effect all decommissioning financial assurances established by the licensee pursuant to RH-409.h. in conjunction with a license issuance or renewal or as required by RH-410. The amount of the financial assurance must be increased, or may be decreased, as appropriate, to cover the detailed cost estimate for decommissioning established pursuant to RH-410.g.4.v.

1. Any licensee who has not provided financial assurance to cover the detailed cost estimate submitted with the decommissioning plan shall do so when this regulation becomes effective.

2. Following approval of the decommissioning plan, a licensee may reduce the amount of the financial assurance as decommissioning proceeds and radiological contamination is reduced at the site with the approval of the Department.

f. The Department may grant a request to extend the time periods established in RH-410.c. if the Department determines that this relief is not detrimental to the public health and safety and is otherwise in the public interest. The request must be submitted no later than thirty (30) days notification pursuant to RH-410.c. The schedule for decommissioning set forth in RH-410.c. may not commence until the Department has made a determination on the request.

g. 1. A decommissioning plan must be submitted if required by license conditions or if the procedures and activities necessary to carry out decommissioning of the site or separate building or outdoor area have not been previously approved by the Department and these procedures could increase potential health and safety impacts to workers or to the public, such as in any of the following cases:

(i). Procedures would involve techniques not applied routinely during cleanup or maintenance operations;

(ii). Workers would be entering areas not normally occupied where surface contamination and radiation levels are significantly higher than routinely encountered during operation;

(iii). Procedures could result in significant greater airborne concentrations of radioactive materials than are present during operation; or

(iv). Procedures could result in significantly greater releases of radioactive material to the environment than those associated with operation.

2. The Department may approve an alternate schedule for submittal of a decommissioning plan required in RH-410.c. if the Department determines that the alternative schedule is necessary to the effective conduct of decommissioning operations and presents no undue risk from radiation to the public health an safety and is otherwise in the public interest.

3. Procedures such as those listed in RH-410.g. with potential health and safety impacts may not be carried out prior to approval of the decommissioning plan.

4. The proposed decommissioning plan for the site or separate building or outdoor area must include:

   (i). A description of the conditions of the site or separate building or outdoor area sufficient to evaluate the acceptability of the plan;

   (ii). A description of planned decommissioning activities;

   (iii). A description of methods used to ensure protection of workers and the environment against radiation hazards during decommissioning;

   (iv). A description of the planned final radiation survey; and

   (v). An updated detailed cost estimate for decommissioning, comparison of that estimate with present funds set aside for decommissioning, and a plan for assuring the availability of adequate funds for completion of decommissioning.

   (vi). For decommissioning plans calling for completion of decommissioning later than twenty-four (24) months after plan approval, the plan shall include a justification for the delay based on the criteria in RH-410.h.

5. The proposed decommissioning plan will be approved by the Department if the information therein demonstrates that the decommissioning will be completed as soon as practicable and that the health and safety of workers and the public will be adequately protected.

h. 1. Except as provided in RH-410.h., licensees shall complete decommissioning of the site or separate building or outdoor area as soon as practicable but no later than twenty-four (24) months following the initiation of decommissioning.

2. Except as provided in RH-410.h., when decommissioning involves the entire site, the licensee shall request license termination as soon as practicable but no later than twenty-four (24) months following the initiation of decommissioning.

i. The Department may approve a request for an alternative schedule for completion of decommissioning of the site separate building or outdoor area and license termination if appropriate, if the Department determines that the alternative is warranted by consideration of the following:

1. Whether it is technically feasible to complete decommissioning within the allotted twenty-four (24) month period;

2. Whether sufficient waste disposal capacity is available to allow completion of decommissioning within the allotted twenty-four (24) month period;

3. Whether a significant volume reduction in wastes requiring disposal will be achieved by allowing short-lived radionuclides to decay;

4. Whether a significant reduction in radiation exposure to workers can be achieved by allowing short-lived radionuclidesto decay; and

5 Other site-specific factors which the Department may consider appropriate on a case-by-case basis, such as the regulatory requirements of other government agencies, lawsuits, ground-water treatment activities, monitored natural ground-water restoration, actions could result in more environmental harm than deferred cleanup, and other factors beyond the control of the licensee.

j. <u>As the final step in decommissioning, the licensee shall:</u>

1. Certify the disposition of all licensed material, including accumulated wastes, by submitting a completed ADH FORM 314 or equivalent information; and

2. Conduct a radiation survey of the premises where the licensed activities were carried out and submit a report of the results of this survey, unless the licensee demonstrates in some other manner that the premises are suitable for release in accordance with the criteria for decommissioning in RH-1216, RH-1217, and/or RH-1218. The licensee shall, as appropriate:

   A. Report levels of gamma radiation in units of microroentgen (millisieverts) per hour at one meter from surfaces, and report levels of radioactivity, including alpha and beta, in units of disintegrations per minute or microcuries (megabecquerels) per 100 square centimeters - removable and fixed - for surfaces, microcuries (megabecquerels) per milliliter for water, and picocuries (becquerels) per gram for solids such as soils or concrete; and

   B. Specify the survey instrument(s) used and certify that each instrument is properly calibrated and tested.

k. <u>Specific licenses, including expired licenses, will be terminated by written notice to the licensee when the Department determines that:</u>

1. Radioactive material has been properly disposed;

2. Reasonable effort has been made to eliminate residual radioactive contamination, if present; and

3. A. A radiation survey has been performed which demonstrates that the premises are suitable for release in accordance with the criteria for decommissioning in RH-1216, RH-1217, and/or RH-1218; or

   B. Other information submitted by the licensee is sufficient that the premises are suitable for release in accordance with the criteria for decommissioning in RH-1216, RH-1217, and/or RH-1218.

4. Records required by RH-600 have been received.

RH-411. Renewal of Licenses.

a. Application for renewal of specific licenses shall be filed in accordance with Part D, RH-403.

b. In any case in which a licensee, not less than thirty (30) days prior to expiration of this existing license, has filed an application in proper form for renewal or for a new license authorizing the same activities, such existing license shall not expire until the application has been finally approved or disapproved by the Department.

RH-412. Amendment of License at Request of Licensee. Applications for amendment of a license shall be filed in accordance with Part D, RH-403 and shall specify the respects in which the licensee desires his license to be amended and the grounds for such amendment.

RH-413. Department Action on Application to Renew or Amend. In considering an application by a licensee to renew or amend his license, the Department will apply the criteria set forth in Part D, RH-404 and Part D, RH-405, as applicable.

RH-414. Inalienability of Licenses. No license issued or granted under these Regulations and no right to possess or utilize radioactive material granted by any license issued pursuant to these Regulations shall be transferred, assigned or in any manner disposed of either voluntarily or involuntarily, directly or indirectly, through transfer of control of any license to any person unless the Department shall, after securing full information, find that the transfer is in accordance with the provisions of the Act and shall give its consent in writing.

RH-415. Reserved.

RH-416. Modification, Revocation and Termination of Licenses.

a. The terms and conditions of all licenses shall be subject to amendment, revision or modification or the license may be suspended or revoked by reason of amendments to the Act or by reason of rules, regulations and orders issued by the Department.

b. Any license may be revoked, suspended or modified in whole or in part, for any material false statement in the application or any statement of fact required under provisions of the Act or of these Regulations or because of conditions revealed by such application or statement of fact or any report, record or inspection or other means which would warrant the Department to refuse to grant a license on an original application or for violation of or failure to observe any of, the terms and conditions of the Act or the license or of any rule, regulation or order of the Department.

c. Except in cases of willful violation or those in which public health, interest or safety requires otherwise, no the license shall be modified, suspended or revoked unless, prior to the institution of proceedings therefore, facts or conduct which may warrant such action shall have been called to the attention of the licensee in writing and the licensee shall have been accorded opportunity to demonstrate or achieve compliance with all lawful requirements.

d. The Department may terminate a specific license upon request submitted by the licensee to the Department in writing.

RH-417.
RH-499. Reserved.

PART E.
TRANSFER OF MATERIAL

RH-500. Authorization for Transfer. No licensee shall transfer radioactive material except as authorized pursuant to this Part.

RH-501. Condition of Transfer. Any licensee may transfer radioactive material subject to acceptance by the transferee, to:

a. The Department;

b. The U.S. Department of Energy, the U.S. Nuclear Regulatory Commission or any successor thereto;

c. Any person exempt from these Regulations to the extent permitted under such exemption;

d. Any person licensed to receive such material under terms of a general license or its equivalent or specific license or equivalent licensing document issued by the Department, the U.S. Nuclear Regulatory Commission or any Agreement State or to any person otherwise authorized to receive such material by the Federal Government or any agency thereof, the Department or any other state having an agreement with the U.S. Nuclear Regulatory Commission, pursuant to Section 274 of the Atomic Energy Act of 1954, as amended; or

e. Any other person authorized by the Department in writing.

f. Before transferring radioactive material to a specific licensee of the Department, the Nuclear Regulatory Commission (NRC) or an Agreement State, or to a general licensee who is required to register with the NRC or an Agreement State prior to receipt of the radioactive material, the licensee transferring the material shall verify that the transferee's license authorizes the receipt of the type, form and quantity of radioactive material to be transferred.

g. The following methods for the verification required by RH-501.f are acceptable:

1. The transferor may have in his possession and read, a current copy of the transferee's specific license or registration certificate.

2. The transferor may have in his possession a written certification by the transferee that he is authorized by license or registration certificate to receive the type, form and quantity of radioactive material to be transferred, specifying the license or registration certificate number, issuing agency and expiration date;

RH-501. (Cont'd)

3. For emergency shipments the transferor may accept oral certification by the transferee that he is authorized by license or registration certificate to receive the type, form and quantity of radioactive material to be transferred, specifying the license or registration certificate number, issuing agency and expiration date; provided, that the oral certification is confirmed in writing within ten (10) days;

4. The transferor may obtain other sources of information compiled by a reporting service from official records of the Department, the NRC or the licensing agency of an Agreement State as to the identity of licensees and the scope and expiration dates of licenses and registration; or

5. When none of the methods of verification in RH-501.g.1 to 4 are readily available or when a transferor desires to verify that information received by one of such methods is correct or up-to-date, the transferor may obtain and record confirmation from the Department, the NRC or the licensing agency of an Agreement State that the transferee is licensed to receive the radioactive material.

RH-502. Preparation of Material. Preparation for shipment and transport of radioactive material shall be in accordance with the provisions of RH-3200 of these Regulations.

RH-503.
RH-599. Reserved.

PART F.
RECORDS, REPORTS, AND INSPECTIONS

RH-600. Records.

a. Each person who receives a source of radiation pursuant to a license or registration under this Section shall keep records showing the receipt, transfer and disposal of such sources of radiation as follows:

1. The licensee or registrant shall retain record of receipt of radioactive material or a source of ionizing radiation as long as the material or source is possessed and for three (3) years following transfer or disposal of the material or source of radiation.

2. The licensee or registrant who transferred the material or source of radiation shall maintain each record of transfer for three (3) years after each transfer unless a specific requirement in another part of the regulations in this Section dictates otherwise.

3. The licensee or registrant who disposed of the material or source of radiation shall retain each record of disposal of radioactive material or source of radiation until the Department terminates each license or registration that authorizes disposal of the material or source of radiation.

b. Each licensee or registrant shall retain each record that is required by this Section for the period specified by the appropriate regulation or license condition. If a retention period is not otherwise specified by regulation or license condition, the record must be retained until the Department terminates each license or registration that authorizes the activity that is subject to the recordkeeping requirement.

c. 1. Records which must be maintained pursuant to this Section may be the original or a reproduced copy or microform if such reproduced copy or microform is duly authenticated by authorized personnel and the microform is capable of producing a clear and legible copy after storage for the period specified by Department regulations. The record may also be stored in electronic media with the capability for producing legible, accurate, and complete records during the required retention period. Records such as letters, drawings, specifications, must include all pertinent information such as stamps, initials, and signatures. The licensee or registrant shall maintain adequate safeguards against tampering with and loss of records.

RH-600. (Cont'd)

2. If there is a conflict between the Department's regulations in this Section, license condition, or other written Department approval or authorization pertaining to the retention period for the same type of record, the retention period specified in the regulations in this Section for such records shall apply unless the Department, pursuant to RH-304, has granted a specific exemption from the record retention requirements specified in this Section.

d. Prior to license termination, each licensee authorized to possess radioactive material with a half-life greater than 120 days, in an unsealed form, shall forward the following records to the Department:

1. Records of disposal of licensed material made under RH-1401, RH-1402, RH-1404, RH-1405; and

2. Records required by RH-1500.c.2.D.

e. If licensed activities are transferred or assigned in accordance with RH-409.b., each licensee authorized to possess radioactive material, with a half-life greater than 120 days, in an unsealed form, shall transfer the following records to the new licensee and the new licensee will be responsible for maintaining these records until the license is terminated:

1. Records of disposal of licensed material made under RH-1401, RH-1402, RH-1404, RH-1405; and

2. Records required by RH-1500.c.2.D.

RH-601. Inspections.

a. Each licensee shall afford, at all reasonable times, to the Department opportunity to inspect radioactive materials and the installation wherein such radioactive materials are used or stored.

b. Each licensee shall make available to the Department for inspection, upon reasonable notice, records kept by the licensee pursuant to these Regulations.

RH-602. Tests. Upon instruction from the Department, each licensee shall perform or cause to have performed and shall permit the Department to perform, such reasonable tests as the Department deems appropriate or necessary, including, but not limited to, tests of:

a. Sources of radiation;

b. Facilities wherein radioactive materials are used or stored;

c. Radiation detection and monitoring instruments; and

d. Other equipment and devices used in connection with utilization or storage of licensed material.

RH-603.-
RH-699. Reserved.

PART G.
ENFORCEMENT

RH-700. a. Violations. Any person who violates any of the provisions of the Act or rules, regulations or orders in effect pursuant thereto, of the Department shall, upon conviction thereof, be punished by a fine of not less that one hundred dollars ($100.00) nor more than two thousand dollars ($2,000.00) or by imprisonment for not more than six (6) months or be both fined and imprisoned.

b. Impounding. Sources of radiation shall be subject to impounding pursuant to Section 5 of these Regulations.

RH-701.-
RH-749. Reserved.

PART H.
RECIPROCITY

RH-750. Reciprocal Recognition of Licenses.

a. Subject to the provisions of these Regulations, any person who possesses a specific license or equivalent licensing document issued by the U.S. Nuclear Regulatory Commission or any Agreement State, other than this state, may conduct the activities authorized in such licensing document within this state for a period not in excess of one hundred eighty (180) days in any period of twelve (12) consecutive months without obtaining a specific license from the Department, provided that:

1. The licensing document does not limit the activity authorized by such document to specified installations or locations; and

2. The out-of-state licensee notifies the Department in writing at least two (2) days prior to engaging in such activity. Such notification shall indicate the exact location, period and type of proposed possession and use within this state and shall be accompanied by a copy of the pertinent licensing document. If, for a specific case, the two-day period would impose an undue hardship on the out-of-state licensee, he may, upon application to the Department, obtain permission to proceed sooner; and

3. The out-of-state licensee complies with all applicable regulations of the Department and with all the terms and conditions of his licensing document, except any such terms and conditions which may be inconsistent with applicable regulations of the Department; and

4. Provided further that the Department may require the out-of-state licensee to supply such other information as the Department may reasonably request.

b. To the extent provided in RH-300, RH-301 and RH-402, any person may transfer, receive, acquire, own, possess and use any equipment, device, commodity or other product containing radioactive material which has been manufactured, processed or produced in accordance with a specific license or equivalent licensing document issued by the U.S. Nuclear Regulatory Commission or any Agreement State.

RH-750. (Cont'd)

c. Notwithstanding the provisions of Paragraph a of this Section RH-750, any person who holds a specific license or equivalent licensing document issued by the U.S. Nuclear Regulatory Commission or an Agreement State authorizing the holder to manufacture, install or service a device described in RH-402.b.1 within areas subject to the jurisdiction of the licensing body is hereby granted a general license to install and service such device in this state provided that:

1. Such person shall file a report with the Department within thirty (30) days after the end of each calendar quarter in which any device is transferred to or installed in this state. Each such report shall identify each general licensee by names and address, the type of device transferred and the quantity and type of radioactive material contained in the device;

2. The device has been manufactured, labeled, installed and serviced in accordance with applicable provisions of the specific license or equivalent licensing document issued to such person by the U.S. Nuclear Regulatory Commission or an Agreement State;

3. Such person shall assure that any labels required to be affixed to the device under regulations of the authority which licensed manufacture of the device bear a statement that "Removal of this label is prohibited"; and

4. The holder of the specific license or equivalent licensing document shall furnish to each general licensee to whom he transfers such device or on whose premises he installs such device a copy of the general license contained in RH-402.b.

d. The Department may withdraw, limit or qualify its acceptance of any specific license or equivalent licensing document issued by another agency or any product distributed pursuant to such licensing document, upon determining that such action is necessary in order to prevent undue hazard to public health and safety or property.

RH-751. Additional Requirements. The Department may, by rule, regulation or order, impose upon any licensee such requirements in addition to those established in these Regulations as it deems appropriate or necessary to minimize danger to public health and safety or property.

RH-752.-
RH-899. Reserved.

PART I.
SCHEDULES

RH-900. Schedule A. Generally Licensed Equipment, When Manufactured in Accordance With Specific License.

The following devices and equipment incorporating radioactive material, when manufactured, tested and labeled by the manufacturer in accordance with the specifications contained in a specific license or equivalent licensing document issued by the Department, the U.S. Nuclear Regulatory Commission or any Agreement State, are placed under a general license pursuant to Section 2, Part D, RH-402.a.

a. Static Elimination Device. Devices designed for use as static eliminators which contain, as a sealed source or sources radioactive material consisting of a total of not more than 500 microcuries of Polonium-210 per device.

b. Ion Generating Tube. Devices designed for ionization of air which contain, as a sealed source or sources, radioactive material consisting of a total of not more than 500 microcuries of Polonium 210 per device or of a total of not more than 50 millicuries of Hydrogen-3 (Tritium) per device.

RH-901. **Schedule B. Exempt Quantities.**

Radioactive Material	Micro-curies	Radioactive Material	Micro-curies
Antimony-122 (Sb 122)	100	Gallium-67 (Ga 67)	100
Antimony-124 (Sb 124)	10	Gallium-72 (Ga 72)	10
Antimony-125 (Sb 125)	10	Germanium-68 (Ge 68)	10
Arsenic-73 (As 73)	100	Germanium-71 (Ge 71)	100
Arsenic-74 (As 74)	10	Gold-195 (Au 195)	10
Arsenic-76 (As 76)	10	Gold-198 (Au 198)	100
Arsenic-77 (As 77)	100	Gold-199 (Au 199)	100
Barium-131 (Ba 131)	10	Hafnium-181 (Hf 181)	10
Barium-133 (Ba 133)	10	Holmium-166 (Ho 166)	100
Barium-140 (Ba 140)	10	Hydrogen-3 (H 3)	1,000
Bismuth-210 (Bi 210)	1	Indium-111 (In 111)	100
Bromine-82 (Br 82)	10	Indium-113m (In 113m)	100
Cadmium-109 (Cd 109)	10	Indium-114m (In 114m)	10
Cadmium-115m (Cd 115m)	10	Indium-115m (In 115m)	100
Cadmium-115 (Cd 115)	100	Indium-115 (In 115)	10
Calcium-45 (Ca 45)	10	Iodine-123 (I 123)	100
Calcium-47 (Ca 47)	10	Iodine-125 (I 125)	1
Carbon-14 (C 14)	100	Iodine-126 (I 126)	1
Cerium-141 (Ce 141)	100	Iodine-129 (I 129)	0.1
Cerium-143 (Ce 143)	100	Iodine-131 (I 131)	1
Cerium-144 (Ce 144)	1	Iodine-132 (I 132)	10
Cesium-129 (Cs 129)	100	Iodine-133 (I-133)	1
Cesium-131 (Cs 131)	1,000	Iodine-134 (I-134)	10
Cesium-134m (Cs 134m)	100	Iodine-135 (I-135)	10
Cesium-134 (Cs 134)	1	Iridium-192 (Ir 192)	10
Cesium-135 (Cs 135)	10	Iridium-194 (Ir 194)	10
Cesium-136 (Cs 136)	10	Iron-52 (Fe 52)	10
Cesium-137 (Cs 137)	10	Iron-55 (Fe 55)	100
Chlorine-36 (Cl 36)	10	Iron-59 (Fe 59)	10
Chlorine-38 (Cl 38)	10	Krypton-85 (Kr 85)	100
Chromium-51 (Cr 51)	1,000	Krypton-87 (Kr 87)	10
Cobalt-57 (Co 57)	100	Lanthanum-140 (La 140)	10
Cobalt-58m (Co 58m)	10	Lutetium-177 (Lu 177)	100
Cobalt-58 (Co 58)	10	Manganese-52 (Mn 52)	10
Cobalt-60 (Co 60)	1	Manganese-54 (Mn 54)	10
Copper-64 (Cu 64)	100	Manganese-56 (Mn 56)	10
Dysprosium-165 (Dy 165)	10	Mercury-197m (Hg 197m)	100
Dysprosium-166 (Dy 166)	100	Mercury-197 (Hg 197)	100
Erbium-169 (Er 169)	100	Mercury-203 (Hg 203)	10
Erbium-171 (Er 171)	100	Molybdenum-99 (Mo 99)	100
Europium-152 (Eu 152) 9.2 h	100	Neodymium-147 (Nd 147)	100
Europium-152 (Eu 152) 13 yr	1	Neodymium-149 (Nd 149)	100
Europium-154 (Eu 154)	1	Nickel-59 (Ni 59)	100
Europium-155 (Eu 155)	10	Nickel-63 (Ni 63)	10
Fluorine-18 (F 18)	1,000	Nickel-65 (Ni 65)	100
Gadolinium-153 (Gd 153)	10	Niobium-93m (Nb 93m)	10
Gadolinium-159 (Gd 159)	100	Niobium-95 (Nb 95)	10

RH-901. **Schedule B. Exempt Quantities.** (Cont'd)

Radioactive Material	Micro-curies	Radioactive Material	Micro-curies
Niobium-97 (Nb 97)	10	Strontium-91 (Sr 91)	10
Osmium-185 (Os 185)	100	Strontium-92 (Sr 92)	10
Osmium-191m (Os 191m)	100	Sulphur-35 (S 35)	100
Osmium-191 (Os 191)	10	Tantalum-182 (Ta 182)	10
Osmium-193 (Os 193)	100	Technetium-96 (Tc 96)	10
Palladium-103 (Pd 103)	100	Technetium-97m (Tc 97m)	100
Palladium-109 (Pd 109)	100	Technetium-97 (Tc 97)	100
Phosphorus-32 (P 32)	10	Technetium-99m (Tc 99m)	100
Platinum-191 (Pt 191)	100	Technetium-99 (Tc 99)	10
Platinum-193m (Pt 193m)	100	Tellurium-125m (Te 125m)	10
Platinum-193 (Pt 193)	100	Tellurium-127m (Te 127m)	10
Platinum-197m (Pt 197m)	100	Tellurium-127 (Te 127)	100
Platinum-197 (Pt 197)	100	Tellurium-129m (Te 129m)	10
Polonium-210 (Po 210)	0.1	Tellurium-129 (Te 129)	100
Potassium-42 (K 42)	10	Tellurium-131m (Te 131m)	10
Potassium-43 (K 43)	10	Tellurium-132 (Te 132)	10
Praseodymium-142 (Pr 142)	100	Terbium-160 (Tb 160)	10
Praseodymium-143 (Pr 143)	100	Thallium-200 (Tl 200)	100
Promethium-147 (Pm 147)	10	Thallium-201 (Tl 201)	100
Promethium-149 (Pm 149)	10	Thallium-202 (Tl 202)	100
Rhenium-186 (Re 186)	100	Thallium-204 (Tl 204)	10
Rhenium-188 (Re 188)	100	Thulium-170 (Tm 170)	10
Rhodium-103m (Rh 103m)	100	Thulium-171 (Tm 171)	10
Rhodium-105 (Rh 105)	100	Tin-113 (Sn 113)	10
Rubidium-81 (Rh 81)	10	Tin-125 (Sn 125)	10
Rubidium-86 (Rb 86)	10	Tungsten-181 (W 181)	10
Rubidium-87 (Rb 87)	10	Tungsten-185 (W 185)	10
Ruthenium-97 (Ru 97)	100	Tungsten-187 (W 187)	100
Ruthenium-103 (Ru 103)	10	Vanadium-48 (V 48)	10
Ruthenium-105 (Ru 105)	10	Xenon-131m (Xe 131m)	1,000
Ruthenium-106 (Ru 106)	1	Xenon-133 (Xe 133)	100
Samarium-151 (Sm 151)	10	Xenon-135 (Xe 135)	100
Samarium-153 (Sm 153)	100	Ytterbium-175 (Yb 175)	100
Scandium-46 (Sc 46)	10	Yttrium-87 (Y 87)	10
Scandium-47 (Sc 47)	100	Yttrium-88 (Y 88)	10
Scandium-48 (Sc 48)	10	Yttrium-90 (Y 90)	10
Selenium-75 (Se 75)	10	Yttrium-91 (Y 91)	10
Silicon-31 (Si 31)	100	Yttrium-92 (Y 92)	100
Silver-105 (Ag 105)	10	Yttrium-93 (Y 93)	100
Silver-110m (Ag 110m)	1	Zinc-65 (Zn 65)	10
Silver-111 (Ag 111)	100	Zinc-69m (Zn 69m)	100
Sodium-22 (Na 22)	10	Zinc-69 (Zn 69)	1,000
Sodium-24 (Na 24)	10	Zirconium-93 (Zr 93)	10
Strontium-85 (Sr 85)	10	Zirconium-95 (Zr 95)	10
Strontium-89 (Sr 89)	1	Zirconium-97 (Zr 97)	10
Strontium-90 (Sr 90)	0.1		

Radioactive Material	Micro-curies	Radioactive Material	Micro-curies
		Alpha emitting radioactive material not listed above	0.01
		Any radioactive material listed above other than alpha emitting radioactive material	0.1

Note 1: For purposes of RH-305.a, where there is involved a combination of isotopes, the limit for the combination should be derived as follows:

Determine the amount of each isotope possessed and 1,000 times the amount in Schedule B for each of those isotopes when not in combination. The sum of the ratios of those quantities may not exceed 1.

Example.

$$\frac{\text{Amt. of Isotope A possessed}}{\text{1000 x Schedule B quantity for Isotope A}} + \frac{\text{Amt. of Isotope B possessed}}{\text{1000 x Schedule B quantity for Isotope B}} < 1$$

RH-902. **Schedule C. Exempt Concentrations.**

Element (atomic number)	Isotope	Column I Gas concentration Ci/ml[12/]	Column II Liquid and solid concentration Ci/ml[13/]
Antimony (51) -------	Sb 122	----------	3×10^{-4}
	Sb 124	----------	2×10^{-4}
	Sb 125	----------	1×10^{-3}
Argon (18) ----------	A 37	1×10^{-3}	---------
	A 41	4×10^{-7}	---------
Arsenic (33) ---------	As 73	----------	5×10^{-3}
	As 74	----------	5×10^{-4}
	As 76	----------	2×10^{-4}
	As 77	----------	8×10^{-4}
Barium (56) ---------	Ba 131	----------	2×10^{-3}
	Ba 140	----------	3×10^{-4}
Beryllium (4) --------	Be 7	----------	2×10^{-2}
Bismuth (83) --------	Bi 206	----------	4×10^{-4}
Bromine (35) --------	Br 82	4×10^{-7}	3×10^{-3}
Cadmium (48) ------	Cd 109	----------	2×10^{-3}
	Cd 115m	----------	3×10^{-4}
	Cd 115	----------	3×10^{-4}
Calcium (20) --------	Ca 45	----------	9×10^{-5}
	Ca 47	----------	5×10^{-4}
Carbon (6) ----------	C 14	1×10^{-6}	8×10^{-3}
Cerium (58) ---------	Ce 141	----------	9×10^{-4}
	Ce 143	----------	4×10^{-4}
	Ce 144	----------	1×10^{-4}
Cesium (55) --------	Cs 131	----------	2×10^{-2}
	Cs 134m	----------	6×10^{-2}
	Cs 134	----------	9×10^{-5}
Chlorine (17) -------	Cl 38	9×10^{-7}	4×10^{-3}
Chromium (24) ----	Cr 51	----------	2×10^{-2}
Cobalt (27) ---------	Co 57	----------	5×10^{-3}
	Co 58	----------	1×10^{-3}
	Co 60	----------	5×10^{-4}
Copper (29) -------	Cu 64	----------	3×10^{-3}
Dysprosium (66) -	Dy 165	----------	4×10^{-3}
	Dy 166	----------	4×10^{-4}
Erbium (68) ------	Er 169	----------	9×10^{-4}
	Er 171	----------	1×10^{-3}
Europium (63) --	Eu 152 -	----------	6×10^{-4}
	(T/2=9.2 hrs)	----------	---------
	Eu 155	----------	2×10^{-3}
Fluorine (9) -----	F 18	2×10^{-6}	8×10^{-3}
Gadolinium (64)	Gd 153	----------	2×10^{-3}
	Gd 159	----------	8×10^{-4}
Gallium (31) ----	Ga 72	----------	4×10^{-4}
Germanium (32)	Ge 71	----------	2×10^{-2}
Gold (79) --------	Au 196	----------	2×10^{-3}
	Au 198	----------	5×10^{-4}
	Au 199	----------	2×10^{-3}
Hafnium (72) ---	Hf 181	----------	7×10^{-4}

RH-902. **Schedule C. Exempt Concentrations**. (Cont'd)

Element (atomic number)	Isotope	Column I Gas concentration Ci/ml[12/]	Column II Liquid and solid concentration Ci/ml[13/]
Hydrogen (1) -----	H 3	5×10^{-6}	3×10^{-2}
Indium (49) -------	In 113m	----------	1×10^{-2}
	In 114m	----------	2×10^{-4}
Iodine (53) -------	I 126	3×10^{-9}	2×10^{-5}
	I 131	3×10^{-9}	2×10^{-5}
	I 132	8×10^{-8}	6×10^{-4}
	I 133	1×10^{-8}	7×10^{-5}
	I 134	2×10^{-7}	1×10^{-3}
Iridium (77) ------	Ir 190	----------	2×10^{-3}
	Ir 192	----------	4×10^{-4}
	Ir 194	----------	3×10^{-4}
Iron (26) ---------	Fe 55	----------	8×10^{-3}
	Fe 59	----------	6×10^{-4}
Krypton (36) ----	Kr 85m	1×10^{-6}	-------
	Kr 85	3×10^{-6}	-------
Lanthanum (57)	La 140	----------	2×10^{-4}
Lead (82) -------	Pb 203	----------	4×10^{-3}
Lutetium (71) ---	Lu 177	----------	1×10^{-3}
Manganese (25)	Mn 52	----------	3×10^{-4}
	Mn 54	----------	1×10^{-3}
	Mn 56	----------	1×10^{-3}
Mercury (80) ---	Hg 197m	----------	2×10^{-3}
	Hg 197	----------	3×10^{-3}
	Hg 203	----------	2×10^{-4}
Molybdenum (42)	Mo 99	----------	2×10^{-3}
Neodymium (60)	Nd 147	----------	6×10^{-4}
	Nd 149	----------	3×10^{-3}
Nickel (28) ------	Ni 65	----------	1×10^{-3}
Niobium(Columbium)(41)	Nb 95	----------	1×10^{-3}
	Nb 97	----------	9×10^{-3}
Osmium (76) ---	Os 185	----------	7×10^{-4}
	Os 191m	----------	3×10^{-2}
	Os 191	----------	2×10^{-3}
	Os 193	----------	6×10^{-4}
Palladium (46) -	Pd 103	----------	3×10^{-3}
	Pd 109	----------	9×10^{-4}
Phosphorus (15)	P 32	----------	2×10^{-4}
Platinum (78) --	Pt 191	----------	1×10^{-3}
	Pt 193m	----------	1×10^{-2}
	Pt 197m	----------	1×10^{-2}
	Pt 197	----------	1×10^{-3}
Polonium (84) --	Po 210	----------	7×10^{-6}
Potassium (19)	K 42	----------	3×10^{-3}
Praseodymium (50) --	Pr 142	----------	3×10^{-4}
	Pr 143	----------	5×10^{-4}

RH-902. **Schedule C. Exempt Concentrations.** (Cont'd)

Element (atomic number)	Isotope	Column I Gas concentration Ci/ml[12/]	Column II Liquid and solid concentration Ci/ml[13/]
Promethium (61)	Pm 147	----------	2×10^{-3}
	Pm 149	----------	4×10^{-4}
Radium (88) ----	Ra 226	----------	1×10^{-7}
	Ra 228	----------	3×10^{-7}
Rhenium (75) --	Re 183	----------	6×10^{-3}
	Re 186	----------	9×10^{-4}
	Re 188	----------	6×10^{-4}
Rhodium (45) --	Rh 103m	----------	1×10^{-1}
	Rh 105	----------	1×10^{-3}
Rubidium (37) -	Rb 86	----------	7×10^{-4}
Ruthenium (44)	Ru 97	----------	4×10^{-3}
	Ru 103	----------	8×10^{-4}
	Ru 105	----------	1×10^{-3}
	Ru 106	----------	1×10^{-4}
Samarium (62)	Sm 153	----------	8×10^{-4}
Scandium (21)	Sc 46	----------	4×10^{-4}
	Sc 47	----------	9×10^{-4}
	Sc 48	----------	3×10^{-4}
Selenium (34) ---	Se 75	----------	3×10^{-3}
Silicon (14) ------	Si 31	----------	9×10^{-3}
Silver (47) -------	Ag 105	----------	1×10^{-3}
	Ag 110m	----------	3×10^{-4}
	Ag 111	----------	4×10^{-4}
Sodium (11) ----	Na 24	----------	2×10^{-3}
Strontium (38) -	Sr 85	----------	1×10^{-3}
	Sr 89	----------	1×10^{-4}
	Sr 91	----------	7×10^{-4}
	Sr 92	----------	7×10^{-4}
Sulfur (16) ------	S 35	9×10^{-8}	6×10^{-4}
Tantalum (73) --	Ta 182	----------	4×10^{-4}
Technetium (43)	Tc 96m	----------	1×10^{-1}
	Tc 96	----------	1×10^{-3}
Tellurium (52) --	Te 125m	----------	2×10^{-3}
	Te 127m	----------	6×10^{-4}
	Te 127	----------	3×10^{-3}
	Te 129m	----------	3×10^{-4}
	Te 131m	----------	6×10^{-4}
	Te 132	----------	3×10^{-4}
Terbium (65) ---	Tb 160	----------	4×10^{-4}
Thallium (81) ---	Tl 200	----------	4×10^{-3}
	Tl 201	----------	3×10^{-3}
	Tl 202	----------	1×10^{-3}
	Tl 204	----------	1×10^{-3}
Thulium (69) ---	Tm 170	----------	5×10^{-4}
	Tm 171	----------	5×10^{-3}
Tin (50) ----------	Sn 113	----------	9×10^{-4}
	Sn 125	----------	2×10^{-4}

RH-902. **Schedule C. Exempt Concentrations.** (Cont'd)

Element (atomic number)	Isotope	Column I Gas concentration Ci/ml[12/]	Column II Liquid and solid concentration Ci/ml[13/]
Tungsten (Wolfram)(74)---	W 181	----------	4×10^{-3}
	W 187	----------	7×10^{-4}
Vanadium (23) -	V 48	----------	3×10^{-4}
Xenon (54) ------	Xe 131m	4×10^{-6}	---------
	Xe 133	3×10^{-6}	---------
	Xe 135	1×10^{-6}	---------
Ytterbium (80) -	Yb 175	----------	1×10^{-3}
Yttrium (30) -----	Y 90	----------	2×10^{-4}
	Y 91m	----------	3×10^{-2}
	Y 91	----------	3×10^{-4}
	Y 92	----------	6×10^{-4}
	Y 83	----------	3×10^{-4}
Zinc (30) --------	Zn 65	----------	1×10^{-3}
	Zn 69m	----------	7×10^{-4}
	Zn 69	----------	2×10^{-2}
Zirconium (40) -	Zr 95	----------	6×10^{-4}
	Zr 97	----------	2×10^{-4}
Beta and/or gamma emitting radioactive material not listed above with half-life less than 3 years	----	1×10^{-10}	1×10^{-6}

NOTE 1: Many radioisotopes disintegrate into isotopes which are also radioactive. In expressing the concentrations in Schedule C, the activity stated is that of the parent isotope and takes into account the daughters.

NOTE 2: For purposes of RH-301 where there is involved a combination of isotopes, the limit for the combination should be derived as follows: Determine for each isotope in the product the ratio between the concentration present in the product and the exempt concentration established in Schedule C for the specific isotope when not in combination. The sum of such ratios may not exceed "1" (i.e. unity).

Example:

$$\frac{\text{Concentration of Isotope A in Product}}{\text{Exempt concentration of Isotope A}} + \frac{\text{Concentration of Isotope B in Product}}{\text{Exempt concentration of Isotope B}} < 1$$

RH-903. Schedule D. Groups of Diagnostic Uses of Radioactive Material in Humans.

Group I. Uptake, dilution and excretion studies (does not include imaging or tumor localizations).

Any radioactive material in a radiopharmaceutical for uptake, dilution, or excretion studies. A licensee may use any of the material in a radiophamaceutical for a diagnostic use involving measurements of uptake, dilution, or excretion for which the Food and Drug Administration (FDA) has a "Notice of Claimed Investigational Exemption for New Drug" (IND) or approved a "New Drug Application" (NDA).

Group II. Imaging and tumor localizations.

Any radioactive material in a diagnostic radiopharmaceutical, except aerosol or gaseous form, or any generator or reagent kit for preparation and diagnostic use for which the Food and Drug Administration (FDA) has a "Notice of Claimed Investigational Exemption for New Drug" (IND) or approved a "New Drug Application" (NDA).

Group III. Generators and Reagent Kits.

Any radioactive Material in a diagnostic radiopharmaceutical, except aerosol or gaseous form, or any generator or reagent kit for preparation and diagnostic use of a radiopharmaceutical containing radioactive Material for which the Food and Drug Administration (FDA) has a "Notice of Claimed Investigational Exemption for "New Drug" (IND) or approved a "New Drug Application" (NDA).

Group IV. Prepared Radiopharmaceuticals for Certain Therapeutic Uses That Do Not Normally Require Hospitalization for Purposes of Radiation Safety.

1. Iodine-131 as iodide for treatment of hyperthyroidism and cardiac dysfunction.

2. Phosphorus-32 as soluble phosphate for treatment of polycythemia vera, leukemia, bone metastases and localization of ocular tumors and cerebral tumors.

3. Phosphorus-32 as colloidal chromic phosphate for intracavitary treatment of malignant effusions.

Group V. Prepared Radiopharmaceuticals for Certain Therapeutic Uses That Normally Require Hospitalization for Purposes of Radiation Safety.

1. Gold-198 as colloid for intracavitary treatment of malignant effusions and palliative management of ascites and pleural effusion.

2. Iodine-131 as iodide for treatment of thyroid carcinoma.

RH-904. **Schedule E**. **Limits for Broad Licenses**.

Radioactive Material	Column I Curies	Column II Curies
Antimony-122	1	0.01
Antimony-124	1	0.01
Antimony-125	1	0.01
Arsenic-73	10	0.1
Arsenic-74	1	0.01
Arsenic-76	1	0.01
Arsenic-77	10	0.1
Barium-131	10	0.1
Barium-140	1	0.01
Beryllium-7	10	0.1
Bismuth-210	0.1	0.001
Bromine-82	10	0.1
Cadmium-109	1	0.01
Cadmium-115m	1	0.01
Cadmium-115	10	0.1
Calcium-45	1	0.01
Calcium-47	10	0.1
Carbon-14	100	1.
Cerium-141	10	0.1
Cerium-143	10	0.1
Cerium-144	0.1	0.001
Cesium-131	100	1.
Cesium-134m	100	1.
Cesium-134	0.1	0.001
Cesium-135	1	0.01
Cesium-136	10	0.1
Cesium-137	0.1	0.001
Chlorine-36	1	0.01
Chlorine-38	100	1.
Chronmium-51	100	1.
Cobalt-57	10	0.1
Cobalt-58m	100	1.
Cobalt-58	1	0.01
Cobalt-60	0.1	0.001
Copper-64	10	0.1
Dysprosium-165	100	1.
Dysprosium-166	10	0.1
Erbium-169	10	0.1
Erbium-171	10	0.1
Europium-152 9.2 h	10	0.1
Europium-152 13 y	0.1	0.001
Europium-154	0.1	0.001
Europium-155	1	0.01
Fluorine-18	100	1.

RH-904. **Schedule E**. **Limits for Broad Licenses**. (Cont'd)

Radioactive Material	Column I Curies	Column II Curies
Gadolinium-153	1	0.01
Gadolinium-159	10	0.1
Gallium-72	10	0.1
Germanium-71	100	1.
Gold-198	10	0.1
Gold-199	10	0.1
Hafnium-181	1	0.01
Holmium-166	10	0.1
Hydrogen-3	100	1.
Indium-113m	100	1.
Indium-114m	1	0.01
Indium-115m	100	1.
Indium-115	1	0.01
Iodine-125	0.1	0.001
Iodine-126	0.1	0.001
Iodine-129	0.1	0.001
Iodine-131	0.1	0.001
Iodine-132	10	0.1
Iodine-133	1	0.01
Iodine-134	10	0.1
Iodine-135	1	0.01
Iridium-192	1	0.01
Iridium-194	10	0.1
Iron-55	10	0.1
Iron-59	1	0.01
Krypton-85	100	1.
Krypton-87	10	0.1
Lanthanum-140	1	0.01
Lutetium-177	10	0.1
Manganese-52	1	0.01
Manganese-54	1	0.01
Manganese-56	10	0.1
Mercury-197m	10	0.1
Mercuty-197	10	0.1
Mercury-203	1	0.01
Molybdenum-99	10	0.1
Neodymium-147	10	0.1
Neodymium-149	10	0.1
Nickel-59	10	0.1
Nickel-63	1	0.01
Nickel-65	10	0.1
Niobium-93m	1	0.01
Niobium-95	1	0.01
Niobium-97	100	1.
Osmium-185	1	0.01
Osmium-191m	100	1.
Osmium-191	10	0.1
Osmium-193	10	0.1

RH-904. **Schedule E**. **Limits for Broad Licenses**. (Cont'd)

Radioactive Material	Column I Curies	Column II Curies
Palladium-103	10	0.1
Palladium-109	10	0.1
Phosphorus-32	1	0.01
Platinum-191	10	0.1
Platinum-193m	100	1.
Platinum-193	10	0.1
Platinum-197m	100	1.
Platinum-197	10	0.1
Polonium-210	0.01	0.0001
Potassium-42	1	0.01
Praseodymium-142	10	0.1
Praseodymium-143	10	0.1
Promethium-147	1	0.01
Promethium-149	10	0.1
Radium-226	0.01	0.0001
Rhenium-186	10	0.1
Rhenium-188	10	0.1
Rhodium-103m	1,000	10.
Rhodium-105	10	0.1
Rubidium-86	1	0.01
Rubidium-87	1	0.01
Ruthenium-97	100	1.
Ruthenium-103	1	0.01
Ruthenium-105	10	0.1
Ruthenium-106	0.1	0.001
Samarium-151	1	0.01
Samarium-153	10	0.1
Scandium-46	1	0.01
Scandium-47	10	0.1
Scandium-48	1	0.01
Selenium-75	1	0.01
Silicon-31	10	0.1
Silver-105	1	0.01
Silver-110m	0.1	0.001
Silver-111	10	0.1
Sodium-22	0.1	0.001
Sodium-24	1	0.01
Strontium-85m	1,000	10.
Strontium-85	1	0.01
Strontium-89	1	0.01
Strontium-90	0.01	0.0001
Strontium-91	10	0.1
Strontium-92	10	0.1
Sulfur-35	10	0.1
Tantalum-182	1	0.01
Technetium-96	10	0.1

RH-904. **Schedule E**. **Limits for Broad Licenses**. (Cont'd)

Radioactive Material	Column I Curies	Column II Curies
Technetium-97m	10	0.1
Technetium-97	10	0.1
Technetium-99m	100	1.
Technetium-99	1	0.01
Tellurium-125m	1	0.01
Tellurium-127m	1	0.01
Tellurium-127	10	0.1
Tellurium-129m	1	0.01
Tellurium-129	100	1.
Tellurium-131m	10	0.1
Tellurium-132	1	0.01
Terbium-160	1	0.01
Thallium-200	10	0.1
Thallium-201	10	0.1
Thallium-202	10	0.1
Tallium-204	1	0.01
Thulium-170	1	0.01
Thulium-171	1	0.01
Tin-113	1	0.01
Tin-125	1	0.01
Tungsten-181	1	0.01
Tungsten-185	1	0.01
Tungsten-187	10	0.1
Vanadium-48	1	0.01
Xenon-131m	1,000	10.
Xenon-133	100	1.
Xenon-135	100	1.
Ytterbium-175	10	0.1
Yttrium-90	1	0.01
Yttrium-91	1	0.01
Yttrium-92	10	0.1
Yttrium-93	1	0.01
Zinc-65	1	0.01
Zinc-69m	10	0.1
Zinc-69	100	1.
Zirconium-93	1	0.01
Zirconium-95	1	0.01
Zirconium-97	1	0.01
Any radioactive material other than alpha emitting radioactive material, source material or special nuclear material not listed above	0.1	0.001

RH-905. **Schedule F. Quantities of Radioactive Materials Requiring Consideration of the Need for an Emergency Plan for Responding to a Release.**

Radioactive material[15/ 16/]	Release Fraction	Quantity (Curies)
Actinium-228	0.001	4,000
Americium-241	.001	2
Americium-242	.001	2
Americium-243	.001	2
Antimony-124	.01	4,000
Antimony-126	.01	6,000
Barium-133	.01	10,000
Barium-140	.01	30,000
Bismuth-207	.01	5,000
Bismuth-210	.01	600
Cadmium-109	.01	1,000
Cadmium-113	.01	80
Calcium-45	.01	20,000
Californium-252	.001	9 (20 mg)
Carbon-14 (Non CO)	.01	50,000
Cerium-141	.01	10,000
Cerium-144	.01	300
Cesium-134	.01	2,000
Cesium-137	.01	3,000
Chlorine-36	.5	100
Chromium-51	.01	300,000
Cobalt-60	.001	5,000
Copper-64	.01	200,000
Curium-242	.001	60
Curium-243	.001	3
Curium-244	.001	4
Curium-245	.001	2
Europium-152	.01	500
Europium-154	.01	400
Europium-155	.01	3,000
Gadolinium-153	.01	5,000
Germanium-68	.01	2,000
Gold-198	.01	30,000
Hafnium-172	.01	400
Hafnium-181	.01	7,000
Holmium-166m	.01	100
Hydrogen-3	.5	20,000
Iodine-125	.5	10
Iodine-131	.5	10
Indium-114m	.01	1,000
Iridium-192	0.001	40,000
Iron-55	.01	40,000
Iron-59	.01	7,000

RH-905. **Schedule F. Quantities of Radioactive Materials Requiring Consideration of the Need for an Emergency Plan for Responding to a Release.** (Cont'd)

Radioactive material[15/ 16/]	Release Fraction	Quantity (Curies)
Krypton-85	1.0	6,000,000
Lead-210	.01	8
Maganese-56	.01	60,000
Mercury-203	.01	10,000
Molybdenum-99	.01	30,000
Neptunium-237	.001	2
Nickel-63	.01	20,000
Niobium-94	.01	300
Phosphors-32	.5	100
Phosphorus-33	.5	1,000
Polonium-210	.01	10
Potassium-42	.01	9,000
Promethium-145	.01	4,000
Promethium-147	.01	4,000
Ruthenium-106	.01	200
Samarium-151	.01	4,000
Scandium-46	.01	3,000
Selenium-75	.01	10,000
Silver-110m	.01	1,000
Sodium-22	.01	9,000
Sodium-24	.01	10,000
Strontium-89	.01	3,000
Strontium-90	.01	90
Sulfur-35	.5	900
Technetium-99	.01	10,000
Technetium-99m	.01	400,000
Tellurium-127m	.01	5,000
Tellurium-129m	.01	5,000
Terbium-160	.01	4,000
Thulium-170	.01	4,000
Tin-113	.01	10,000
Tin-123	.01	3,000
Tin-126	.01	1,000
Titanium-44	.01	100
Vanadium-48	.01	7,000
Xenon-133	1.0	900,000
Yttrium-91	.01	2,000
Zinc-6	.01	5,000
Zirconium-93	.01	400
Zirconium-95	.01	5,000

RH-905. **Schedule F. Quantities of Radioactive Materials Requiring Consideration of the Need for an Emergency Plan for Responding to a Release.** (Cont'd)

Radioactive material[15/] [16/]	Release Fraction	Quantity (Curies)
Any other beta-gamma emitter	.01	10,000
Mixed fission products	.01	1,000
Mixed corrosion products	.01	10,000
Contaminated equipment, beta-gamma	.001	10,000
Irradiated material, any form other than solid noncombustible	.01	1,000
Irradiated material, solid noncombustible	.001	10,000
Mixed radioactive waste, beta-gamma	.01	1,000
Packaged mixed waste, beta-gamma	..001	10,000
Any other alpha emitter	.001	2
Contaminated equipment, ALPHA	.0001	20
Packaged waste, alpha [16/]	.0001	20
Combinations of radioactive materials listed above [15/]	---	---

APPENDIX A: Criteria Relating to Use of Financial Tests and Parent Company Guarantees for Providing Reasonable Assurance of Funds for Decommissioning

I. Introduction

An applicant or licensee may provide reasonable assurance of the availability of funds for decommissioning based on obtaining a parent company guarantee that funds will be available for decommissioning costs and on a demonstration that the parent company passes a financial test. This appendix established criteria for passing the financial test and for obtaining the parent company guarantee.

II. Financial Test

A. To pass the financial test, the parent company must meet the criteria of either paragraph A.1 or A.2 of this Appendix:

1. The parent company must have:

a. Two of the following three ratios: A ratio of total liabilities to net worth less than 2.0; a ratio of the sum of net income plus depreciation, depletion, and amortization to total liabilities greater than 0.1; and a ratio of current assets to current liabilities greater than 1.5; and

b. Net working capital and tangible net worth each at least six times the current decommissioning cost estimates (or prescribed amount if a certification is used); and

c. Tangible net worth of at least $10 million; and

d. Assets located in the United States amounting to at least ninety (90) percent of total assets or at least six times the current decommissioning cost estimates (or prescribed amount if a certificate is used).

2. The parent company must have:

a. A current rating for its most recent bond issuance of AAA, AA, A, or BBB, as issued by Standard and Poor's or Aaa, Aa, A or Baa as issued by Moody's; and

b. Tangible net worth at least six times the current decommissioning cost estimate (or prescribed amount if a certification is used); and

c. Tangible net worth of at least $10 million; and

d. Assets located in the United States amounting to at least ninety (90) percent of total assets or at least six times the current decommissioning cost estimates (or prescribed amount if certification is used).

B. The parent company's independent certified public accountant must have compared the data used by the parent company in the financial test, which is derived from the independently audited, year end financial statements for the latest fiscal year, with the amounts in such financial statement. In connection with that procedure the licensee shall inform the Department within 90 days of any matters coming to the auditor's attention which cause the auditor to believe that the data specified in the financial test should be adjusted and that the company no longer passes the test.

C. 1. After the initial financial test, the parent company must repeat the passage of the test within ninety (90) days after the close of each succeeding fiscal year.

2. If the parent company no longer meets the requirements of paragraph A of this Appendix, the licensee must send notice to the Department of intent to establish alternate financial assurance as specified in the Department's regulations. The notice must be sent by certified mail within ninety (90) days after the end of the fiscal year for which the yearend financial data show that the parent company no longer meets the financial test requirements. The licensee must provide alternate financial assurance within 120 days after the end of such fiscal year.

III. Parent Company Guarantee

The terms of a parent company guarantee which an applicant or licensee obtains must provide that:

A. The parent company guarantee will remain in force unless the guarantor sends notice of cancellation by certified mail to the licensee and the Department. Cancellation may not occur, however, during the 120 days beginning on the date of receipt of the notice of cancellation by both the licensee and the Department, as evidenced by the return receipts.

Appendix A. (Cont'd)

B. If the licensee fails to provide alternate financial assurance as specified in the Department's regulations within ninety (90) days after receipt by the licensee and Department of a notice of cancellation of the parent company guarantee from the guarantor, the guarantor will provide such alternative financial assurance in the name of the licensee.

C. The parent company guarantee and financial test provisions must remain in effect until the Department has terminated the license.

D. If a trust is established for decommissioning costs, the trustee and trust must be acceptable to the Department. An acceptable trust includes an appropriate State or Federal Government agency or an entity which has the authority to act as a trustee and whose trust operations are regulated and examined by a Federal or State agency.

APPENDIX B: Criteria Relating to Use of Financial Tests and Self Guarantees for Providing Reasonable Assurance of Funds for Decommissioning

I. Introduction

An applicant or licensee may provide reasonable assurance of the availability of funds for decommissioning based on furnishing its own guarantee that funds will be available for decommissioning costs and on a demonstration that the company passes a financial test of Section II of Appendix B. The terms of the self-guarantee are in Section III of Appendix B. This Appendix establishes criteria for passing the financial test for the self-guarantee and establishes the terms for a self-guarantee.

II. Financial Test

A. To pass the financial test, a company must meet all of the following criteria:

1. Tangible net worth at least ten (10) times the total current decommissioning cost estimate (or the current amount required if certification is used) for all decommissioning activities for which the company is responsible as self-guaranteeing licensee and as parent-guarantor.

2. Assets located in the United States amounting to at least ninety percent (90%) of total assets or at least ten (10) times the total current decommissioning cost estimate (or prescribed amount required if certification is used) for all decommissioning activities for which the company is responsible as self-guaranteeing licensee and as parent-guarantor.

3. A current rating for its most recent bond issuance of AAA, AA, or A as issued by Standard and Poors (S&P), or Aaa, Aa, or A as issued by Moodys.

B. To pass the financial test, a company must meet all of the following additional requirements:

1. The company must have at least one class of equity securities registered under the Securities Exchange Act of 1934.

2. The company's independent certified public accountant must have compared the data used by the company in the financial test which is derived from the independently audited, yearend financial statements for the latest fiscal year, with the amounts in such financial statement. In connection with that procedure, the licensee shall inform the Department within ninety (90) days of any matters coming to the auditor's attention which cause the auditor to believe that the data specified in the financial test should be adjusted and that the company no longer passes the test.

3. After the initial financial test, the company must repeat the passage of the test within ninety (90) days after the close of each succeeding fiscal year.

C. If the licensee no longer meets the requirements of Section II.A of Appendix B, the licensee must send notice to the Department of its intent to establish alternate financial assurance as specified in the Department's Regulations within 120 days of such notice.

III. Company Self-Guarantee

The terms of a self-guarantee which an applicant or licensee obtains must provide that:

A. The guarantee will remain in force unless the licensee sends notice of cancellation by certified mail to the Department. Cancellation may not occur, however, during the 120 days beginning on the date of receipt of the notice of cancellation by the Department, as evidenced by the return receipt.

B. The licensee shall provide alternate financial assurance as specified in the Department's regulations within ninety (90) days following receipt by the Department of a notice of cancellation of the guarantee.

C. The guarantee and financial test provisions must remain in effect until the Department has terminated the license or until another financial assurance method acceptable to the Department has been put in effect by the licensee.

D. The licensee will promptly forward to the Department and the licensee's independent auditor all reports covering the latest fiscal year filed by the licensee with the Securities and Exchange Commission pursuant to the requirements of section 13 of the Securities and Exchange Act of 1934.

Appendix B. (Cont'd)

E. If, at any time, the licensee's most recent bond issuances ceases to be rated in any category of "A" or above by either Standard and Poors or Moodys, the licensee will provide notice in writing of such fact to the Department within twenty (20) days after publication of the change by the rating service. If the licensee's most recent bond issuance ceases to be rated in any category of A or above by both Standard and Poor and Moodys, the licensee no longer meets the requirements of Section II.A of Appendix B.

F. The applicant or licensee must provide to the Department a written guarantee (a written commitment by a corporate officer) which states that the licensee will fund and carry out the required decommissioning activities or, upon issuance of an order by the Department, the licensee will set up and fund a trust in the amount of the current cost estimates for decommissioning.

APPENDIX C: Criteria Relating to Use of Financial Tests and Self Guarantees for Providing Reasonable Assurance of Funds for Decommissioning by Commercial Companies That Have no Outstanding Rated Bonds

I. Introduction

An applicant or licensee may provide reasonable assurance of the availability of funds for decommissioning based on furnishing its own guarantee that funds will be available for decommissioning costs and on a demonstration that the company passes a financial test of Section II of APPENDIX C. The terms of the self-guarantee are in Section III of APPENDIX C. This Appendix establishes criteria for passing the financial test for the self-guarantee and establishes the terms for a self-guarantee.

II. Financial Test

A. To pass the financial test, a company must meet all of the following criteria:

1. Tangible net worth greater than $10 million, or at least ten (10) times the total current decommissioning cost estimate (or the current amount required if certification is used), whichever is greater, for all decommissioning activities for which the company is responsible as self-guaranteeing licensee and as parent-guarantor.

2. Assets located in the United States amounting to at least 90 percent (90%) of total assets or at least ten (10) times the total current decommissioning cost estimate (or the current amount required if certification is used) for all decommissioning activities for which the company is responsible as self-guaranteeing licensee and as parent-guarantor.

3. A ratio of cash flow divided by total liabilities greater than 0.15 and a ratio of total liabilities divided by net worth less than 1.5.

B. In addition, to pass the financial test, a company must meet all of the following additional requirements:

1. The company's independent certified public accountant must have compared the data used by the company in the financial test, which is required to be derived from the independently audited year end financial statement based on United States generally accepted accounting practices for the latest fiscal year, with the amounts in such financial statement. In connection with that procedure, the licensee shall inform the Department within ninety (90) days of any matters that may cause the auditor to believe that the data specified in the financial test should be adjusted and that the company no longer passes the test.

2. After the initial financial test, the company must repeat the passage of the test within ninety (90) days after the close of each succeeding fiscal year.

3. If the licensee no longer meets the requirements of Section II.A of APPENDIX C, the licensee must send notice to the Department of its intent to establish alternate financial assurance as specified in the Department's Regulations. The notice must be sent by certified mail, return receipt requested, within ninety (90) days after the end of the fiscal year for which the yearend financial data show that the licensee no longer meets the financial test requirements. The licensee must provide alternative financial assurance within 120 days after the end of such fiscal year.

III. Company Self-Guarantee

The terms of a self-guarantee which an applicant or licensee furnishes must provide that:

A. The guarantee will remain in force unless the licensee sends notice of cancellation by certified mail, return receipt requested, to the Department. Cancellation may not occur until an alternative financial assurance mechanism is in place.

B. The licensee shall provide alternative financial assurance as specified in the Department's regulations within ninety (90) days following receipt by the Department of a notice of cancellation of the guarantee.

Appendix C. (Cont'd)

C. The guarantee and financial test provisions must remain in effect until the Department has terminated the license or until another financial assurance method acceptable to the Department has been put in effect by the licensee.

D. The applicant or licensee must provide to the Department a written guarantee (a written commitment by a corporate officer) which states that the licensee will fund and carry out the required decommissioning activities or, upon issuance of an order by the Department, the licensee will set up and fund a trust in the amount of the current cost estimates for decommissioning.

APPENDIX D: Criteria Relating to Use of Financial Tests and Self Guarantees for Providing Reasonable Assurance of Funds for Decommissioning by Nonprofit Colleges, Universities, and Hospitals

I. Introduction

An applicant or licensee may provide reasonable assurance of the availability of funds for decommissioning based on furnishing its own guarantee that funds will be available for decommissioning costs and on a demonstration that the applicant or licensee passes a financial test of Section II of APPENDIX D. The terms of the self-guarantee are in Section III of APPENDIX D. This Appendix establishes criteria for passing the financial test for the self-guarantee and establishes the terms for a self-guarantee.

II. Financial Test

A. For colleges and universities, to pass the financial test, a college or university must meet either the criteria in Paragraph II.A.1. or the criteria in Paragraph II.A.2. of this Appendix.

1. For applicants or licensees that issue bonds, a current rating for its most recent uninsured, uncollateralized, and unencumbered bond issuance of AAA, AA, or A as issued by Standard and Poors (S&P), or Aaa, Aa, or A as issued by Moodys.

2. For applicants or licensees that do not issue bonds, States of at least $50 million, at least thirty (30) times the total current decommissioning cost estimate (or the current amount required if certification is used), whichever is greater, for all decommissioning activities for which the college or university is responsible as self-guaranteeing licensee and as parent-guarantor.

B. For hospitals, to pass the financial test, a hospital must meet either the criteria in Paragraph II.B.1. or the criteria in Paragraph II.B.2. of this Appendix.

1. For applicants or licensees that issue bonds, a current rating for its most recent uninsured, uncollateralized, and unencumbered bond issuance of AAA, AA, or A as issued by Standard and Poors (S&P), or Aaa, Aa, or A as issued by Moodys.

2. For applicants or licensees that do not issue bonds, all the following tests must be met:

a. (Total Revenues less total expenditures) divided by total revenues must be equal to or greater than 0.04.

b. Long term debt divided by net fixed assets must be less than or equal to 0.67

c. (Current assets and depreciation fund) divided by current liabilities must be greater than or equal to 2.55.

d. Operating revenues must be at least 100 times the total current decommissioning cost estimate (or the current amount required if certification is used) for all decommissioning activities for which the hospital is responsible as self-guaranteeing licensee.

C. In addition, to pass the financial test; a licensee must meet all the following requirements:

1. The licensee's independent certified public accountant must have compared the data used by the licensee in the financial test, which is required to be derived from the independently audited yearend financial statements, based on United States generally accepted accounting practices, for the latest fiscal year, with the amounts in such financial statement. In connection with that procedure, the licensee shall inform the Department within ninety (90) days of any matters that may cause the auditor to believe that the data specified in the financial test should be adjusted and that the company no longer passes the test.

2. After the initial financial test, the licensee must repeat the passage of the test within ninety (90) days after the close of each succeeding fiscal year.

3. If the licensee no longer meets the requirements of Section I of APPENDIX D, the licensee must send notice to the Department of its intent to establish alternate financial assurance as specified in the Department's Regulations. The notice must be sent by certified mail, return receipt requested, within ninety (90) days after the end of the fiscal year for which the yearend financial data show that the licensee no longer meets the financial test requirements. The licensee must provide alternative financial assurance within 120 days after the end of such fiscal year.

III. Self-Guarantee

The terms of a self-guarantee which an applicant or licensee furnishes must provide that:

A. The guarantee will remain in force unless the licensee sends notice of cancellation by certified mail, and/or return receipt requested, to the Department. Cancellation may not occur unless an alternate financial assurance mechanism is in place.

B. The licensee shall provide alternative financial assurance as specified in the Department's regulations within ninety (90) days following receipt by the Department of a notice of cancellation of the guarantee.

C. The guarantee and financial test provisions must remain in effect until the Department has terminated the license or until another financial assurance method acceptable to the Department has been put in effect by the licensee.

D. The applicant or licensee must provide to the Department a written guarantee (a written commitment by a corporate officer or officer of the institution) which states that the licensee will fund and carry out the required decommissioning activities or, upon issuance of an order by the Department, the licensee will set up and fund a trust in the amount of the current cost estimates for decommissioning.

E. If, at any time, the licensee's most recent bond issuances ceases to be rated in any category of "A" or above by either Standard and Poors or Moodys, the licensee will provide notice in writing of such fact to the Department within twenty (20) days after publication of the change by the rating service.

FOOTNOTES FOR SECTION 2

1/ Attention is directed to the fact that regulation by the State of source material, byproduct material and special nuclear material in quantities not sufficient to form a critical mass is subject to the provisions of the agreement between the State and the U.S. Nuclear Regulatory Commission and to 10 CFR Part 150 of the Commission's regulations.

2/ The requirements specified in Subdivision B and C of this Subparagraph need not be met by counterweights manufactured prior to December 31, 1969; provided that such counterweights are impressed with the legend, **"CAUTION - RADIOACTIVE MATERIAL - URANIUM,"** as previously required by these Regulations.

3/ Authority to transfer possession or control by the manufacturer, processor or producer of any equipment, device, commodity or other product containing source or byproduct material whose subsequent possession, use, transfer and disposal by all other persons are exempted from regulatory requirements may be obtained only from the U.S. Nuclear Regulatory Commission, Washington, D.C. 20555.

4/ For purposes of this Subparagraph, "electron tubes" include spark gap tubes, power tubes, gas tubes including glow lamps, receiving tubes, microwaves tubes, indicator tubes, pick-up tubes, radiation detection tubes and any other completely sealed tube that is designed to conduct or control electrical currents.

5/ Authority to transfer possession or control by the manufacturer, processor or producer of any equipment, device, commodity or other product containing byproduct material whose subsequent possession, use, transfer and disposal by all other persons are exempted from regulatory requirements may be obtained only from the U.S. Nuclear Regulatory Commission, Washington, D.C. 20555.

6/ Attention is directed particularly to the provisions of Section 3 of these Regulations which relate to the labeling of containers.

7/ Any notification of incidents referred to in those requirements shall be filed with or made to the Department.

8/ The New Drug provisions of the Federal Food, Drug and Cosmetic Act also govern the availability and use of any specific diagnostic drugs in interstate commerce.

9/ The model, serial number and name of manufacturer or distributor may be omitted from this label provided they are elsewhere specified in labeling affixed to the device.

10/ Deleted. Deleted when RH-405.m was deleted.

FOOTNOTES FOR SECTION 2 (Cont'd)

11/ Authority to transfer possession or control by the manufacturer, processor or producer of any equipment, device, commodity or other product containing source or byproduct material whose subsequent possession, use, transfer and disposal by all other persons are exempted from regulatory requirements may be obtained only from the U.S. Nuclear Regulatory Commission, Washington, D.C. 20555.

12/ Values are given in Column 1 only for those materials normally used in gases.

13/ Ci/gm for solids.

14/ These reporting requirements do not supersede or release licensee of complying with the requirements under the Emergency Planning and Community Right-to-Know Act of 1986, Title III, Pubic Law 99-499 or other state or federal reporting requirements.

15/ For combinations of radioactive materials, consideration of the need an emergency plan is required if the sum of the ratios of the quantity of for each radioactive material authorized to the quantity listed for that material in Schedule F exceeds one.

16/ Waste packaged in Type B containers does not require an emergency plan.

SECTION 3.
STANDARDS FOR PROTECTION AGAINST RADIATION

(FOOTNOTES APPEAR AT THE END OF THIS SECTION)

PART A. GENERAL

RH-1000. Authority. Act 8 of Second Extraordinary Session of 1961, as amended.

RH-1001. Effective Date. The provisions of these Regulations shall become effective on January 1, 1963, except where another effective date is specifically noted.

RH-1002. Purpose and Scope.

a. These Regulations establish standards for protection against radiation hazards. Except as otherwise specifically provided, this Part applies to all licensees or registrants.

b. It is the purpose of the Regulations in this Part to control the receipt, possession, use, transfer, and disposal of licensed material by any licensee or registrant in such a manner that the total dose to an individual (including doses resulting from licensed and unlicensed radioactive material and from radiation sources other than background radiation) does not exceed the standards for protection against radiation prescribed in the Regulations in this Part. However, nothing in this Part shall be construed as limiting actions that may be necessary to protect health and safety.

RH-1003. Communications. All communications concerning these Regulations should be addressed to the Division Director, Division of Radiation Control and Emergency Management, Arkansas - Department of Health, 4815 West Markham, Mail Slot 30, Little Rock, Arkansas 72205-3867.

RH-1004. Radiation Protection Programs.

a. Each licensee or registrant shall develop, document, and implement a radiation protection program commensurate with the scope and extent of licensed activities or x-ray equipment use and sufficient to ensure compliance with the provisions of this Part. (See RH-1500 for recordkeeping requirements relating to these programs.)

b. The licensee or registrant shall use, to the extent practical, procedures and engineering controls based upon sound radiation protection principles to achieve occupational doses and doses to members of the public that are as low as is reasonably achievable (ALARA).

c. The licensee or registrant shall periodically (at least annually) review the radiation protection program content and implementation.

d. To implement the ALARA requirements in RH-1004.b., and not withstanding the requirements in RH-1208, a constraint on air emissions of radioactive material to the environment, excluding Radon-222 and its daughters, shall be established by licensees such that the individual member of the public likely to receive the highest dose will not be expected to receive a total effective dose equivalent in excess of ten (10) mrem (0.1 mSv) per year from these emissions. If a licensee subject to this requirement exceed this dose constraint, the licensee shall report the exceedance as provided in RH-1504 and promptly take appropriate corrective action to ensure against recurrence.

RH-1005.-RH-1099. Reserved.

PART B.
DEFINITIONS

RH-1100. Definitions as used in these Regulations. Additional definitions used only in a certain Part will be found in that Part.

a. Absorbed dose - The energy imparted by ionizing radiation per unit mass of irradiated material. The units of absorbed dose are the rad and the gray (Gy).

b. Act - The Atomic Energy Act of 1954 (42 U.S.C. 2011 et seq.), as amended.

c. Activity - The rate of disintegration (transformation) or decay of radioactive material. The units of activity are the curie (Ci) and the becquerel (Bq).

d. Adult - An individual 18 or more years of age.

e. Agreement State - Any State with which the U.S. Nuclear Regulatory Commission has entered into an effective agreement under Section 274 b. of the Atomic Energy Act of 1954 as amended (73 Stat. 689).

f. Airborne radioactive material - Radioactive material dispersed in the air in the form of dusts, fumes, particulates, mists, vapors, or gases.

g. Airborne radioactivity area - A room, enclosure, or area in which airborne radioactive materials, composed wholly or partly of licensed material, exist in concentrations:

1. In excess of the derived air concentrations (DACs) specified in Appendix G to RH-1000 through RH-2110, or

2. To such a degree that an individual present in the area without respiratory protective equipment could exceed, during the hours an individual is present in a week, an intake of 0.6 percent of the annual limit on intake (ALI) or 12 DAC-hours.

h. Air-purifying Respirator - A respirator with an air purifying filter, cartridge, or canister that removes specific air contaminants by passing ambient air through the air-purifying element.

i. ALARA (acronym for "as low as is reasonably achievable") - Making every reasonable effort to maintain exposures to radiation as far below the dose limits in this Part as is practical consistent with the purpose for which the licensed activity or x-ray equipment use is undertaken, taking into account the state of technology, the economics of improvements in relation to state of technology, the economics of improvements in relation to benefits to the public health and safety, and other societal and socioeconomic considerations, and in relation to utilization of x-ray equipment, nuclear energy and licensed materials in the public interest.

j. Annual limit on intake (ALI) - The derived limit for the amount of radioactive material taken into the body of an adult worker by inhalation or ingestion in a year. ALI is the smaller value of intake of a given radionuclide in a year by the reference man that would result in a committed effective dose equivalent of 5 rems (0.05 Sv) or a committed dose equivalent of 50 rems (0.5 Sv) to any individual organ or tissue. (ALI values for intake by ingestion and by inhalation of selected radionuclides are given in Table 1, Columns 1 and 2, of Appendix G to RH-1000 through RH-2110).

k. Approved qualified expert - An individual who has, prior to offering health physics services, registered with and demonstrated to the satisfaction of the Department that he/she possesses the knowledge and training to measure ionizing radiation parameters, to evaluate safety techniques and to advise regarding radiation protection matters.

l. Assigned protection factor (APF) - The expected workplace level of respiratory protection that would be provided by a properly functioning respirator or a class of respirators to properly fitted and trained users. Operationally, the inhaled concentration can be estimated by dividing the ambient airborne concentration by the APF.

m. Atmosphere-supplying respirator - A respirator that supplies the respirator user with breathing air from a source independent of the ambient atmosphere, and includes supplied-air respirators (SARs) and self-contained breathing apparatus (SCBA) units.

n. Background radiation - Radiation from cosmic sources, naturally occurring radioactive materials, including Radon (except as a decay product of source or special nuclear material) and global fallout as it exists in the environment from the testing of nuclear explosive devices or from past nuclear accidents such as Chernobyl that contribute to background radiation and are not under the control of the licensee or registrant.

o. Bioassay (radiobioassay) - The determination of kinds, quantities or concentrations, and, in some cases, the locations of radioactive material in the human body, whether by direct measurement (in vivo counting) or by analysis and evaluation of materials excreted or removed from the human body.

p. Byproduct material - Any radioactive material (except special nuclear material) yielded in or made radioactive by exposure to the radiation incident to the process of producing or utilizing special nuclear material.

q. Class (or lung class or inhalation class) - A classification scheme for inhaled material according to its rate of clearance from the pulmonary region of the lung. Materials are classified as D, W, or Y, which applies to a range of clearance half-times: for Class D (Days) of less than 10 days, for Class W (Weeks) from 10 to 100 days, and for Class Y (Years) of greater than 100 days.

r. Collective dose - The sum of the individual doses received in a given period of time by a specified population from exposure to a specified source of radiation.

s. Committed dose equivalent ($H_{T,50}$) - The dose equivalent to organs or tissues of reference (T) that will be received from an intake of radioactive material by an individual during the 50-year period following the intake.

t. Committed effective dose equivalent ($H_{E,50}$) - The sum of the products of the weighting factors applicable to each of the body organs or tissues that are irradiated and the committed dose equivalent to these organs or tissues ($H_{E,50} = \Sigma\, w_T H_{T,50}$).

u. Constraint (dose constraint) - a value above which specified licensee or registrant actions are required.

v Controlled area - An area, outside of a restricted area but inside the site boundary, access to which can be limited by the licensee for any reason.

w. Critical Group - the group of individuals reasonably expected to receive the greatest exposure to residual radioactivity for any applicable set of circumstances.

x. Declared pregnant woman - A woman who has voluntarily informed her employer, in writing, of her pregnancy and the estimated date of conception. The declaration remains in effect until the declared woman withdraws the declaration in writing or is no longer pregnant.

y. Decommission - to remove a facility or site safely from service and reduce residual radioactivity to a level that permits:

(1) Release of the property for unrestricted use and termination of the license; or

(2). Release of the property under restricted conditions and termination of the license.

z. Deep-dose equivalent (H_d) - (which applies to external whole-body exposure) The dose equivalent at a tissue depth of 1 cm (1000 mg/cm^2).

aa. Demand respirator - An atmosphere-supplying respirator that admits breathing air to the facepiece only when a negative pressure is created inside the facepiece by inhalation.

ab. Department - The Arkansas Department of Health or its duly authorized representatives.

ac. Department of Energy (DOE) - The Department of Energy established by the Department of Energy Organization Act (Public Law 95-91, 91 Stat. 565, 42 U.S.C. 7101 et seq.) to the extent that the DOE, or its duly authorized representatives, exercises functions formerly vested in the U.S. Atomic Energy Commission, its Chairman, members, officers, and components and transferred to the U.S. Energy Research and Development Administration and to the Administrator thereof pursuant to Sections 104 (b), (c), and (d) of the Energy Reorganization Act of 1974 (Public Law 93-438, 88 Stat. 1233 at 1237, 42 U.S.C. 5814) and retransferred to the Secretary of Energy pursuant to Section 301(a) of the Department of Energy Organization Act (Public Law 95-91, 91 Stat. 565 at 577-578, 42 U.S.C. 7151).

ad. Derived air concentration (DAC) - The concentration of a given radionuclide in air which, if breathed by the reference man for a working year of 2,000 hours under conditions of light work (inhalation rate 1.2 cubic meters of air per hour), results in an intake of one ALI. DAC values are given in Table 1, Column 3, of Appendix G to RH-1000 through RH-2110.

ae. Derived air concentration-hour (DAC-hour) - The product of the concentration of radioactive material in air (expressed as a fraction or multiple of the derived air concentration for each radionuclide) and the time of exposure to that radionuclide, in hours. A licensee may take 2,000 DAC-hours to represent one ALI, equivalent to a committed effective dose equivalent of 5 rems (0.05 Sv).

af. Director - Director of the Arkansas Department of Health.

ag. Disposable respirator - A respirator for which maintenance is not intended and that is designed to be discarded after excessive breathing resistance, sorbent exhaustion, physical damage, or end-of-service-life renders it unsuitable for use. Examples of this type of respirator are a disposable half-mask respirator or a disposable escape-only self-contained breathing apparatus (SCBA).

ah. Distinguishable from background - the detectable concentration of a radionuclide is statistically different from the background concentration of that radionuclide in the vicinity of the site or, in the case of structures, in similar materials using adequate measurement technology, survey, and statistical techniques.

ai. Dose or radiation dose - A generic term that means absorbed dose, dose equivalent, effective dose equivalent, committed dose equivalent, committed effective dose equivalent, or total effective dose equivalent, as defined in other Paragraphs of this Section.

aj. Dose equivalent (H_T) - The product of the absorbed dose in tissue, quality factor, and all other necessary modifying factors at the location of interest. The units of dose equivalent are the rem and sievert (Sv).

ak. Dosimetry processor - An individual or an organization that processes and evaluates individual monitoring equipment in order to determine the radiation dose delivered to the equipment.

al. Effective dose equivalent (H_E) - The sum of the products of the dose equivalent to the organ or tissue (H_T) and the weighting factors (w_T) applicable to each of the body organs or tissues that are irradiated ($H_E = \Sigma\ w_T H_T$).

am. Embryo/fetus - The developing human organism from conception until the time of birth.

an. Entrance or access point - Any location through which an individual could gain access to radiation areas or to radioactive materials. This includes entry or exit portals of sufficient size to permit human entry, irrespective of their intended use.

ao. Exposure - Being exposed to ionizing radiation or to radioactive material.

ap. External dose - That portion of the dose equivalent received from radiation sources outside the body.

aq. Extremity - Hand, elbow, arm below the elbow, foot, knee, and leg below the knee.

ar. Eye dose equivalent - The external exposure of the lens of the eye and is taken as the dose equivalent at a tissue depth of 0.3 centimeter (300 mg/cm^2).

as. Generally applicable environmental radiation standards - Standards issued by the Environmental Protection Agency (EPA) under the authority of the Atomic Energy Act of 1954, as amended, that impose limits on radiation exposures or levels, or concentrations or quantities of radioactive material, in the general environment outside the boundaries of locations under the control of persons possessing or using radioactive material.

at. Government agency - Any executive department, commission, independent establishment, corporation wholly or partly owned by the United States of America, which is an instrumentality of the United States, or any board, bureau, division, service, office, officer, authority, administration, or other establishment in the executive branch of the Government.

au. Gray - See RH-1102. Units of Radiation Dose.

av. Helmet - A rigid respirator inlet covering that also provides head protection against impact and penetration.

aw. High radiation area - An area, accessible to individuals, in which radiation levels from radiation sources external to the body could result in an individual receiving a dose equivalent in excess of 0.1 rem (1 mSv) in one (1) hour at thirty 30 centimeters from the radiation source or thirty (30) centimeters from any surface that the radiation penetrates.

ax. Hood - A respiratory inlet covering that completely covers the head and neck and may also cover portions of the shoulders and torso.

ay. Individual - Any human being.

az. Individual monitoring:

1. The assessment of dose equivalent by the use of devices designed to be worn by an individual;

2. The assessment of committed effective dose equivalent by bioassay (see Bioassay) or by determination of the time-weighted air concentrations to which an individual has been exposed, i.e., DAC-hours; or

3. The assessment of dose equivalent by the use of survey data.

ba. Individual Monitoring Devices (individual monitoring equipment) - Devices designed to be worn by a single individual for the assessment of dose equivalent such as film badges, thermoluminescent dosimeters (TLDs), pocket ionization chambers, and personal ("lapel") air sampling devices.

bb. Internal dose - That portion of the dose equivalent received from radioactive material taken into the body.

bc. Lens dose equivalent (LDE) - applies to the external exposure of the lens of the eye and is taken as the dose equivalent at a tissue depth of 0.3 centimeter (300 mg/cm^2).

bd. License - Except where otherwise specified, means a license issued pursuant to Section 2, Section 6, or Section 7.

be. Licensed material - Source material, special nuclear material, or byproduct material received, possessed, used, transferred or disposed of under a general or specific license issued by the Department.

bf. Licensee - The holder of a license.

bg. Limits (dose limits) - The permissible upper bounds of radiation doses.

bh. Loose-fitting facepiece - A respiratory inlet covering that is designed to form a partial seal with the face.

bi. Lost or missing licensed material - Licensed material whose location is unknown. It includes material that has been shipped but has not reached its destination and whose location cannot be readily traced in the transportation system.

bj. Member of the public – Any individual except when that individual is receiving an occupational dose or unrestricted area.

bk. Minor - An individual less than 18 years of age.

bl. Misadministration - The administration of:

1. A radiopharmaceutical dosage greater than 30 microcuries of either sodium iodide I-125 or I-131:

A. Involving the wrong individual or wrong radiopharmaceutical; or

B. When both the administered dosage differs from the prescribed dosage by more than twenty (20%) percent of the prescribed dosage and the difference between the administered dosage and prescribed dosage exceeds 30 microcuries.

2. A therapeutic radiopharmaceutical dosage, other than sodium iodide I-125 or I-131:

A. Involving the wrong individual, wrong radiopharmaceutical, or wrong route of administration; or

B. When the administered dosage differs from the prescribed dosage by more than twenty (20%) percent of the prescribed dosage.

3. A gamma stereotactic radiosurgery radiation dose:

A. Involving the wrong individual or wrong treatment site; or

B. When the calculated total administered dose differs from the total prescribed dose by more than ten (10%) percent of the total prescribed dose.

4. A teletherapy radiation dose or medical particle accelerator dose:

A. Involving the wrong individual, wrong mode of treatment, or wrong treatment site;

B. When the treatment consists of three (3) or fewer fractions and the calculated total administered dose differs from the total prescribed dose by more than ten (10%) percent of the total prescribed dose;

C. When the calculated weekly administered dose exceeds the weekly prescribed dose by thirty (30%) percent or more of the weekly prescribed dose; or

D. When the calculated total administered dose differs from the total prescribed dose by more than twenty (20%) percent of the total prescribed dose.

5. A brachytherapy radiation dose:

   A. Involving the wrong individual, wrong radioisotope, or wrong treatment site (excluding, for permanent implants, seeds that were implanted in the correct site but migrated outside the treatment site);

   B. Involving a sealed source that is leaking;

   C. When, for a temporary implant, one or more sealed sources are not removed upon completion of the procedure; or

   D. When the calculated administered dose differs from the prescribed dose by more than twenty (20%) percent of the prescribed dose.

6. A diagnostic radiopharmaceutical dosage, other than quantities greater than 30 microcuries of either sodium iodide I-125 or I-131, both:

   A. Involving the wrong individual, wrong radiopharmaceutical, wrong route of administration, or when the administered dosage differs from the prescribed dosage and;

   B. When the dose to the individual exceeds 5 rems effective dose equivalent or 50 rems dose equivalent to any individual organ.

bm. Monitoring (radiation monitoring, radiation protection monitoring) - The measurement of radiation levels, concentrations, surface area concentrations or quantities of radioactive material and the use of the results of these measurements to evaluate potential exposures and doses.

bn. Negative pressure respirator (tight fitting) - A respirator in which the air pressure inside the facepiece is negative during inhalation with respect to the ambient air pressure outside the respirator.

bo. Nonstochastic effect - Health effects, the severity of which varies with the dose and for which a threshold is believed to exist. Radiation-induced cataract formation is an example of a nonstochastic effect (also called a deterministic effect).

bp. Occupational dose - The dose received by an individual in the course of employment in which the individual's assigned duties involve exposure to radiation or to radioactive material from licensed and unlicensed sources of radiation, whether in the possession of the licensee or other person. Occupational dose does not include dose received from background radiation, from any medical administration the individual has received from exposure to individuals administered radioactive material and released in accordance with RH-1214, from voluntary participation in medical research programs, or as a member of the general public.

bq. Person - Any individual, corporation, partnership, firm, association, trust, estate, public or private institution, group, agency, political subdivision of this State, any other State or political subdivision or agency thereof and any legal successor, representative, agent or agency of the foregoing, other than the U.S. Nuclear Regulatory Commission and other federal government agencies.

br. Pharmacist - An individual registered by this State to compound and dispense drugs, prescriptions and poisons.

bs. Planned special exposure - An infrequent exposure to radiation, separate from and in addition to the annual dose limits.

bt. Positive pressure respirator - a respirator in which the pressure inside the respiratory inlet covering exceeds the ambient air pressure outside the respirator.

bu. Powered air-purifying respirator (PAPR) - an air-purifying respirator that uses a blower to force the ambient air through air-purifying elements to the inlet covering.

bv. Prescribed dosage - The quantity of radiopharmaceutical activity as documented:

1. In a written directive; or

2. Either in the diagnostic clinical procedures manual or in any appropriate record in accordance with the directions of the authorized user for the diagnostic procedure.

bw. Prescribed dose -

1. For gamma stereotactic radiosurgery, the total dose as documented in the written directive;

2. For teletherapy, the total dose and dose per fraction as documented in the written directive; or

3. For brachytherapy, either the total source strength and exposure time or the total dose, as documented in the written directive.

bx. Pressure demand respirator - a positive pressure atmosphere-supplying respirator that admits breathing air to the facepiece when the positive pressure is reduced inside the facepiece by inhalation.

by. Public dose - The dose received by a member of the public from exposure to radiation or radioactive material released by a licensee, or to any other source of radiation under the control of a licensee or registrant. Public dose does not include occupational dose or doses received from background radiation, from any medical administration the individual has received, from exposure to individuals administered radioactive material and released in accordance with RH-1214, or from voluntary participation in medical research programs.

bz. Qualified Expert - A person qualified by training and experience to calibrate a teletherapy unit and establish procedures for spot-check measurements. This person shall:

1. Be certified by the American Board of Radiology in Therapeutic Radiological Physics, Radiological Physics, Roentgen-Ray and Gamma-Ray Physics or X-ray and Radium Physics; or

2. Is certified by the American Board of Medical Physics in radiation oncology physics; or

3. Have the following minimum training and experience:

A. A Master's Degree or Doctorate in physics, biophysics, radiological physics, or health physics;

B. One year of full-time training in therapeutic radiological physics; and

C. One year of full-time experience in a radiotherapy facility including personal calibration and spot-check of a least one (1) teletherapy unit.

ca Quantitative fit test (QNFT) - an assessment of the adequacy of respirator fit by numerically measuring the amount of leakage into the respirator.

cb. Quality Factor (Q) - The modifying factor (listed in Tables 1 and 2 of RH-1102) that is used to derive dose equivalent from absorbed dose

cc. Quarter - A period of time equal to one-fourth of the year observed by the licensee (approximately 13 consecutive weeks), providing that the beginning of the first quarter in a year coincides with the starting date of the year and that no day is omitted or duplicated in consecutive quarters.

cd. Rad - See RH-1102. Units of Radiation Dose.

ce. Radiation (ionizing radiation) - Alpha particles, beta particles, gamma rays, x-rays, neutrons, high-speed electrons, high-speed protons, and other particles capable of producing ions. Radiation, as used in this Part, does not include non-ionizing radiation, such as radio- or microwaves, or visible, infrared, or ultraviolet light.

cf. Radiation area - An area, accessible to individuals, in which radiation levels could result in an individual receiving a dose equivalent in excess of 0.005 rem (0.05 mSv) in one (1) hour at 30 centimeters from the radiation source or from any surface that the radiation penetrates

cg. Radiation machine - Any device capable of producing radiation, but excluding devices which produce radiation only by the use of radioactive material

ch. Radioactive material - Any material (solid, liquid or gas) which emits radiation spontaneously including any natural radioactive material such as Radium.

ci. Radioactivity - The transformation of unstable atomic nuclei by the emission of radiation.

cj. Recordable event - The administration of:

1. A radiopharmaceutical or radiation without a written directive where a written directive is required;

2. A radiopharmaceutical or radiation where a written directive is required without daily recording of each administered radiopharmaceutical dosage or radiation dose in the appropriate record;

3. A radiopharmaceutical dosage greater than 30 microcuries of either sodium iodide I-125 or I-131 when both:

   A. The administered dosage differs from the prescribed dosage by more than ten (10%) percent of the prescribed dosage; and

   B. The difference between the administered dosage and prescribed dosage exceeds 15 microcuries;

4. A therapeutic radiopharmaceutical dosage, other than sodium iodide I-125 or I-131, when the administered dosage differs from the prescribed dosage by more than 10 percent of the prescribed dosage;

5. A teletherapy radiation dose when the calculated weekly administered dose exceeds the weekly prescribed dose by 15 percent or more of the weekly prescribed dose; or

6. A brachytherapy radiation dose when the calculated administered dose differs from the prescribed dose by more than ten (10%) percent of the prescribed dose.

ck. Reference man - A hypothetical aggregation of human physical and physiological characteristics arrived at by international consensus. These characteristics may be used by researchers and public health workers to standardize results of experiments and to relate biological insult to a common base.

cl. Rem - See RH-1102. Units of Radiation Dose.

cm. Residual radioactivity - radioactivity in structures, materials, soils, groundwater, and other media at a site resulting from activities under the licensee's control. This includes radioactivity from all licensed and unlicensed sources used by the licensee, but, excludes background radiation. It also includes radioactive materials remaining at the site as a result of routine or accidental releases of radioactive material at the site even if those burials were made in accordance with the provision of Section 3. Part E. Waste Disposal.

cn. Respiratory protective device - An apparatus, such as a respirator, used to reduce the individual's intake of airborne radioactive materials.

co. Restricted area - An area, access to which is limited by the licensee for the purpose of protecting individuals against undue risks from exposure to radiation and radioactive materials. Restricted area does not include areas used as residential quarters, but separate rooms in a residential building may be set apart as a restricted area.

cp. Sanitary sewerage - A system of public sewers for carrying off waste water and refuse, but excluding sewage treatment facilities, septic tanks, and leach fields owned or operated by the licensee.

cq. Self-contained breathing apparatus (SCBA) - an atmosphere-supplying respirator for which the breathing air source is designed to be carried by the user.

cr. Shallow-dose equivalent (H_s) (which applies to the external exposure of the skin or an extremity) - Is taken as the dose equivalent at a tissue depth of 0.007 centimeter (7 mg/cm^2) averaged over an area of one (1) square centimeter.

cs. Sievert - See RH-1102. Units of Radiation Dose.

ct. Site boundary - That line beyond which the land or property is not owned, leased, or otherwise controlled by the licensee.

cu. Source material -

1. Uranium or Thorium or any combination of Uranium and Thorium in any physical or chemical form; or

2. Ores that contain, by weight, one-twentieth of one (1) percent (0.05 percent), or more, of Uranium, Thorium, or any combination of Uranium and Thorium. Source material does not include special nuclear material.

cv. Source of radiation - Any radioactive material or any radiation machine.

cw. Special nuclear material -

1. Plutonium, Uranium-233, Uranium enriched in the isotope 233 or in the isotope 235, and any other material that the Department, pursuant to the provisions of Section 51 of the Act, determines to be special nuclear material, but does not include source material, or

2. Any material artificially enriched by any of the foregoing but does not include source material.

cx. Storage container - A device in which sealed sources are transported or stored.

cy. Stochastic effects - Health effects that occur randomly and for which the probability of the effect occurring, rather than its severity, is assumed to be a linear function of dose without threshold. Hereditary effects and cancer incidence are examples of stochastic effects.

cz. Supplied-air respirator (SAR) or airline respirator - an atmosphere-supplying respirator for which the source of breathing air is not designed to be carried by the user.

da. Survey - An evaluation of the radiological conditions and potential hazards incident to the production, use, transfer, release, disposal, or presence of radioactive material or other sources of radiation. When appropriate, such an evaluation includes a physical survey of the location of radioactive material and measurements or calculations of levels of radiation, or concentrations or quantities of radioactive material present.

db. Temporary jobsite - a location to which radioactive materials or x-ray equipment have been dispatched to perform one (1) or more of the following service operations:

1. Moisture/density measurements;

2. Level measurements;

3. Any portable devices containing radioactive materials; and/or

4. Consulting services included, but not limited to:

A. Calibration of instruments;

B. Repair of devices or sources;

C. Sealed source installation and/or exchange;

D. Decommissioning of sealed sources.

dc. These Regulations - Section 3, Rules and Regulations of the State Board of Health, Standards for Protection Against Radiation.

dd. Tight-fitting facepiece - a respiratory inlet covering that forms a complete seal with the face.

de. Total Effective Dose Equivalent (TEDE) - The sum of the deep-dose equivalent (for external exposures) and the committed effective dose equivalent (for internal exposures).

df. Uncontrolled area or unrestricted area - Any area to which access is not controlled by the licensee or registrant for the purposes of protection of individuals from exposure to radiation and radioactive materials and any area used for residential quarters.

dg. Uranium fuel cycle - The operations of milling of Uranium ore, chemical conversion of Uranium, isotopic enrichment of Uranium, fabrication of Uranium fuel, generation of electricity by a light-water-cooled nuclear power plant using Uranium fuel, and reprocessing of spent Uranium fuel to the extent that these activities directly support the production of electrical power for public use. Uranium fuel cycle does not include mining operations, operations at waste disposal sites, transportation of radioactive material in support of these operations, and the reuse of recovered non-Uranium special nuclear and byproduct materials from the cycle.

dh. User seal check (fit check) - an action conducted by the respirator user to determine if the respirator is properly seated to the face. Examples include negative pressure check, positive pressure, irritant smoke check, or isoamyl acetate check.

di. Very high radiation area - An area, accessible to individuals, in which radiation levels from radiation sources external to the body could result in an individual receiving an absorbed dose in excess of 500 rads (5 grays) in one (1) hour at one (1) meter from a radiation source or from any surface that the radiation penetrates.

Note: At very high doses received at high dose rates, units of absorbed dose (e.g., rads and grays) are appropriate, rather than units of dose equivalent (e.g., rems and sieverts).

dj. Week - Seven (7) consecutive days starting on Sunday.

dk. Weighting factor (w_T) - For an organ or tissue (T) is the proportion of the risk of stochastic effects resulting from irradiation of that organ or tissue to the total risk of stochastic effects when the whole body is irradiated uniformly. For calculating the effective equivalent, the values of w_T are dose:

ORGAN DOSE WEIGHTING FACTORS

Organ or Tissue	w_T
Gonads	0.25
Breast	0.15
Red bone marrow	0.12
Lung	0.12
Thyroid	0.03
Bone surfaces	0.03
Remainder	0.30[a]
Whole Body	1.OO[b]

[a] 0.30 results from 0.06 for each of 5 "remainder" organs (excluding the skin and the lens of the eye) that receive the highest doses.

[b] For the purpose of weighting the external whole body dose (for adding it to the internal dose), a single weighting factor, w_T = 1.0, has been specified. The use of other weighting factors for external exposure will be approved on a case-by-case basis until such time as specific guidance is issued.

dl. Whole body - For purposes of external exposure, head, trunk (including male gonads), arms above the elbow, or legs above the knee.

dm. Worker - An individual engaged in work under a license or registration issued by the Department and controlled by a licensee or registrant.

dn. Working level (WL) - Any combination of short-lived Radon daughters (for Radon-222: Polonium-218, Lead-214, Bismuth-214, and Polonium-214; and for Radon-220: Polonium-216, Lead-212, Bismuth-212, and Polonium-212) in one liter of air that will result in the ultimate emission of 1.3×10^5 MeV of potential alpha particle energy.

do. Working level month (WLM) - An exposure to one working level for 170 hours (2,000 working hours per year/12 months per year = approximately 170 hours per month).

RH-1100. (Cont'd)

dp. Written directive - An order in writing for a specific patient or human research subject, dated and signed by an authorized user prior to the administration of a radiopharmaceutical or radiation, except as specified in item 6 of this definition, containing the following information:

1. For any administration of quantities greater than 30 microcuries of either sodium iodide I-125 or I-131: the dosage;

2. For a therapeutic administration of a radiopharmaceutical other than sodium iodide I-125 or I-131: the radiopharmaceutical, dosage, and route of administration;

3. For gamma stereotactic radiosurgery: target coordinates, collimator size, plug pattern, and total dose;

4. For teletherapy: the total dose, dose per fraction, treatment site, and overall treatment period;

5. For high-dose-rate remote after loading brachytherapy: the radioisotope, treatment site, and total dose; or

6. For all other brachytherapy:

   A. Prior to implantation: the radioisotope number of sources, and source strengths; and

   B. After implantation but prior to completion of the procedure: the radioisotope, treatment site, and total source strength and exposure time (or, equivalently, the total dose).

7. For any medical particle accelerator dose: the total dose, dose per fraction, treatment site, and overall treatment period.

dq. Year - The period of time beginning in January used to determine compliance with the provisions of this Part. The licensee may change the starting date of the year used to determine compliance by the licensee provided that the change is made at the beginning of the year and that no day is omitted or duplicated in consecutive years.

RH-1101. Other Definitions. Definitions of certain other words and phrases as used in these Regulations are set forth in other Paragraphs.

RH-1102. Units of Radiation Dose.

As used in this Part, the units of radiation dose are:

a. Exposure rate - The exposure per unit of time, such as roentgen per minute and milliroentgen per hour.

b. Gray (Gy) - The SI unit of absorbed dose. One gray is equal to an absorbed dose of one (1) joule/kilogram (100 rads).

c. Rad - The special unit of absorbed dose. One rad is equal to an absorbed dose of 100 ergs/gram or 0.01 joule/kilogram (0.01 gray).

d. Rem - The special unit of any of the quantities expressed as dose equivalent. The dose equivalent in rems is equal to the absorbed dose in rads multiplied by the quality factor (1 rem = 0.01 sievert).

e. Roentgen - the special unit of exposure. One roentgen (R) equals 2.58×10^{-4} coulombs/kilogram of air (See “Exposure” in RH-1100).

f. Sievert (Sv) - The SI unit of any of the quantities expressed as dose equivalent. The dose equivalent in sieverts is equal to the absorbed dose in grays multiplied by the quality factor (1 Sv = 100 rems).

g. As used in this Part, the quality factors for converting absorbed dose to dose equivalent are shown in Table 1.

TABLE RH-1102 #1

QUALITY FACTORS AND ABSORBED DOSE EQUIVALENCIES

TYPE OF RADIATION Factor	Quality (Q)	Absorbed Dose Equal to a Unit Dose Equivalent[a]
X-, gamma, or beta radiation	1	1
Alpha particles, multiple-charged particles, fission fragments and heavy particles of unknown charge	20	0.05
Neutrons of unknown energy	10	0.1
High-energy protons	10	0.1

[a] Absorbed dose in rad equal to 1 rem or the absorbed dose in gray equal to 1 sievert.

h. If it is more convenient to measure the neutron fluence rate than to determine the neutron dose equivalent rate in rems per hour or sieverts per hour, as provided in RH-1102.g of this Section, 1 rem (0.01 Sv) of neutron radiation of unknown energies may, for purposes of the Regulations in this Part, be assumed to result from a total fluence of 25 million neutrons per square centimeter incident upon the body. If sufficient information exists to estimate the approximate energy distribution of the neutrons, the licensee may use the fluence rate per unit dose equivalent or the appropriate Q value from Table 2 to convert a measured tissue dose in rads to dose equivalent in rems.

RH-1102. (Cont'd)

TABLE RH-1102 #2

MEAN QUALITY FACTORS, Q, AND FLUENCE PER UNIT DOSE EQUIVALENT FOR MONOENERGETIC NEUTRONS

	Neutron Energy (MeV)	Quality Factor[a] (Q)	Fluence per Unit Dose Equivalent[b] (neutrons cm^{-2} rem^{-1})
(thermal)	2.5×10^{-8}	2	980×10^{6}
	1×10^{-7}	2	980×10^{6}
	1×10^{-6}	2	810×10^{6}
	1×10^{-5}	2	810×10^{6}
	1×10^{-4}	2	840×10^{6}
	1×10^{-3}	2	980×10^{6}
	1×10^{-2}	2.5	1010×10^{6}
	1×10^{-1}	7.5	170×10^{6}
	5×10^{-1}	11	39×10^{6}
	1	11	27×10^{6}
	2.5	9	29×10^{6}
	5	8	23×10^{6}
	7	7	24×10^{6}
	10	6.5	24×10^{6}
	14	7.5	17×10^{6}
	20	8	16×10^{6}
	40	7	14×10^{6}
	60	5.5	16×10^{6}
	1×10^{2}	4	20×10^{6}
	2×10^{2}	3.5	19×10^{6}
	3×10^{2}	3.5	16×10^{6}
	4×10^{2}	3.5	14×10^{6}

[a] Value of quality factor (Q) at the point where the dose equivalent is maximum in a 30 cm diameter cylinder tissue-equivalent phantom.

[b] Monoenergetic neutrons incident normally on a 30 cm diameter cylinder tissue-equivalent phantom.

RH-1103. Units of Radioactivity.

For the purposes of this Part, activity is expressed in the special unit of curies (Ci) or in the SI unit of becquerels (Bq), or their multiples, or disintegrations (transformations) per unit of time.

a. One becquerel = 1 disintegration per second (s^{-1}).

b. One curie = 3.7×10^{10} disintegrations per second = 3.7×10^{10} becquerels = 2.22×10^{12} disintegrations per minute.

RH-1104. Interpretations.

Except as specifically authorized by the Department in writing, no interpretation of the meaning of the Regulations in this Part by an officer or employee of the Department other than a written interpretation by the Department Director or designee will be recognized to be binding upon the Department.

RH-1105. Implementation.

a. The applicable Section of RH-1000 through RH-2110 must be used in lieu of requirements in the standards for protection against radiation in effect prior to January 1, 1994 that are cited in license conditions except as specified in RH-1105.c through RH-1105.e of this Section. If the requirements of this Part are more restrictive than the existing license condition, then the licensee shall comply with this Part unless exempted by RH-1105.d of this Section.

b. Any existing license condition that is more restrictive than a requirement in RH-1000 through RH-2110 remains in force until there is a license amendment or license renewal.

c. If a license condition exempted a licensee from a requirement in the standards for protection against radiation in effect prior to January 1, 1994, it continues to exempt a licensee from the corresponding provision of RH-1000 through RH-2110.

d. If a license condition cites provisions in requirements in the standards for protection against radiation in effect prior to January 1, 1994 and there are no corresponding provisions in RH-1000 through RH-2110, the license condition remains in force until there is a license amendment or license renewal that modifies or removes this condition.

e. Any existing license condition that is more restrictive than a requirement in RH-1000 through RH-2110 remains in force until there is a technical specification change, license amendment, or license renewal.

f. If a license condition exempts a licensee from a provision of this Section in RH-1 through RH-602, it also exempts the licensee from the corresponding provision of RH-1000 through RH-2110.

g. If a license condition cites provisions in Part M and there are no corresponding provisions in RH-1000 through RH-2110, then the license condition remains in force until there is a license amendment, or license renewal that modifies or removes this condition.

RH-1106 -
RH-1199. Reserved

PART C.
PERMISSIBLE DOSES, LEVELS, AND CONCENTRATIONS

RH-1200. Occupational Dose Limits for Adults.

a. The licensee or registrant shall control the occupational dose to individual adults, except for planned special exposures under RH-1205, to the following dose limits.

1. An annual limit, which is the more limiting of:

A. The total effective dose equivalent being equal to 5 rems (0.05 Sv), or

B. The sum of the deep-dose equivalent and the committed dose equivalent to any individual organ or tissue other than the lens of the eye being equal to 50 rems (0.5 Sv).

2. The annual limits to the lens of the eye, to the skin, and to the extremities which are:

A. An lens dose equivalent of 15 rems (0.15 Sv), and

B. A shallow-dose equivalent of 50 rems (0.50 Sv) to the skin or to each of the extremities.

b. Doses received in excess of the annual limits, including doses received during accidents, emergencies, and planned special exposures, must be subtracted from the limits for planned special exposures that the individual may receive during the current year (See RH-1205.e.1.) and during the individual's lifetime (See RH-1205.e.2.).

c. The assigned deep-dose equivalent and shallow-dose equivalent must be for the part of the body receiving the highest exposure. The deep-dose equivalent, lens dose equivalent and shallow-dose equivalent may be assessed from surveys or other radiation measurements for the purpose of demonstrating compliance with the occupational dose limits, if the individual monitoring device was not in the region of highest potential exposure, or the results of individual monitoring are unavailable.

d. Derived air concentration (DAC) and annual limit on intake (ALI) values are presented in Table 1 of Appendix G to RH-1000 through RH-2110 and may be used to determine the individual's dose (See RH-1500.f) and to demonstrate compliance with the occupational dose limits.

RH-1200. (Cont'd)

e. In addition to the annual dose limits, the licensee shall limit the soluble Uranium intake by an individual to 10 milligrams in a week in consideration of chemical toxicity (See footnote 3 of Appendix G to RH-1000 through RH-2110).

f. The licensee shall reduce the dose that an individual may be allowed to receive in the current year by the amount of occupational dose received while employed by any other person (see RH-1500.d.5).

RH-1201. Compliance with Requirements for Summation of External and Internal Doses.

a. If the licensee is required to monitor under both RH-1302.a and b, the licensee shall demonstrate compliance with the dose limits by summing external and internal doses. If the licensee is required to monitor only under RH-1302.a or only under RH-1302.b, then summation is not required to demonstrate compliance with the dose limits. The licensee may demonstrate compliance with the requirements for summation of external and internal doses by meeting one of the conditions specified in RH-1201.b and the conditions in RH-1201.c and RH-1201.d.

NOTE: The dose equivalents for the lens of the eye, the skin, and the extremities are not included in the summation, but are subject to separate limits.

b. Intake by inhalation. If the only intake of radionuclides is by inhalation, the total effective dose equivalent limit is not exceeded if the sum of the deep-dose equivalent divided by the total effective dose equivalent limit, and one of the following, does not exceed unity:

1. The sum of the fractions of the inhalation ALI for each radionuclide, or

2. The total number of derived air concentration-hours (DAC-hours) for all radionuclides divided by 2,000, or

3. The sum of the calculated committed effective dose equivalents to all significantly irradiated[1/] organs or tissues (T) calculated from bioassay data using appropriate biological models and expressed as a fraction of the annual limit.

RH-1201. (Cont'd)

c. Intake by oral ingestion. If the occupationally exposed individual also receives an intake of radionuclides by oral ingestion greater than ten percent (10%) of the applicable oral ALI, the licensee shall account for this intake and include it in demonstrating compliance with the limits.

d. Intake through wounds or absorption through skin. The licensee shall evaluate and, to the extent practical account for intakes through wounds or skin absorption.

NOTE: The intake through intact skin has been included in the calculation of DAC for Hydrogen-3 and does not need to be further evaluated.

RH-1202. Determination of External Dose From Airborne Radioactive Material.

Licensees shall, when determining the dose from airborne radioactive material, include the contribution to the deep-dose equivalent, eye dose equivalent, and shallow-dose equivalent from external exposure to the radioactive cloud (See Appendix G to RH-1000 through RH-2110, footnotes 1 and 2).

NOTE: Airborne radioactivity measurements and DAC values should not be used as the primary means to assess the deep-dose equivalent when the airborne radioactive material includes radionuclides other than noble gases or if the cloud of airborne radioactive material is not relatively uniform. The determination of the deep-dose equivalent to an individual should be based upon measurements using instruments or individual monitoring devices.

RH-1203. Determination of Internal Exposure.

a. For purposes of assessing dose used to determine compliance with occupational dose equivalent limits, the licensee shall, when required under RH-1302, take suitable and timely measurements of:

1. Concentrations of radioactive materials in air in work areas; or

2. Quantities of radionuclides in the body; or

3. Quantities of radionuclides excreted from the body; or

4. Combinations of these measurements.

b. Unless respiratory protective equipment is used, as provided in RH-1303.f.5, or the assessment of intake is based on bioassays, the licensee shall assume that an individual inhales radioactive material at the airborne concentration in which the individual is present.

c. When specific information on the physical and biochemical properties of the radionuclides taken into the body or the behavior or the material in an individual is known, the licensee may:

1. Use that information to calculate the committed effective dose equivalent, and, if used, the licensee shall document that information in the individual's record;

2. Upon prior approval of the Department, adjust the DAC or ALI values to reflect the actual physical and chemical characteristics of airborne radioactive material (e.g., aerosol size distribution or density); and

3. Separately assess the contribution of fractional intakes of Class D, W, or Y compounds of given radionuclide (See Appendix G to RH-1000 through RH-2110) to the committed effective dose equivalent.

d. If the licensee chooses to assess intakes of Class Y material using the measurements given in RH-1203.a.2 or 3, the licensee may delay the recording and reporting of the assessments for periods up to seven (7) months, unless otherwise required by RH-1502 or RH-1503, in order to permit the licensee to make additional measurements basic to the assessments.

e. If the identity and concentration of each radionuclide in a mixture are known, the fraction of the DAC applicable to the mixture for use in calculating DAC-hours must be either:

1. The sum of the ratios of the concentration to the appropriate DAC value (e.g., D, W, Y) from Appendix G to RH-1000 through RH-2110 for each radionuclide in the mixture; or

2. The ratio of the total concentration for all radionuclides in the mixture to the most restrictive DAC value for any radionuclide in the mixture.

f. If the identity of each radionuclide in a mixture is known, but the concentration of one or more of the radionuclides in the mixture is not known, the DAC for the mixture must be the most restrictive DAC of any radionuclide in the mixture.

RH-1203. (Cont'd)

g. When a mixture of radionuclides in air exists, licensees may disregard certain radionuclides in the mixture if:

1. The licensee uses the total activity of the mixture in demonstrating compliance with the dose limits in RH-1200 and in complying with the monitoring requirements in RH-1302.b.;

2. The concentration of any radionuclide disregarded is less than ten (10%) percent of its DAC; and

3. The sum of these percentages for all of the radionuclides disregarded in the mixture does not exceed thirty (30%) percent.

h. 1. In order to calculate the committed effective dose equivalent, the licensee may assume that the inhalation of one ALI, or an exposure of 2,000 DAC-hours, results in a committed effective dose equivalent of 5 rems (0.05 Sv) for radionuclides that have their ALIs or DACs based on the committed effective dose equivalent.

2. When the ALI (and the associated DAC) is determined by the nonstochastic organ dose limit of 50 rems (0.5 Sv), the intake of radionuclides that would result in a committed effective dose equivalent of 5 rems (0.05 Sv) (the stochastic ALI) is listed in parentheses in Table 1 of Appendix G to RH-1000 through RH-2110. In this case, the licensee may, as a simplifying assumption, use the stochastic ALIs to determine committed effective dose equivalent. However, if the licensee uses the stochastic ALIs, the licensee must also demonstrate that the limits in RH-1200.a.1.i and ii. are met.

RH-1204 Reserved.

RH-1205 Planned Special Exposures.

A licensee or registrant may authorize an adult worker to receive doses in addition to and accounted for separately from the doses received under the limits specified in RH-1201 provided that each of the following conditions is satisfied:

a. The licensee or registrant authorizes a planned special exposure only in an exceptional situation when alternatives that might avoid the dose estimated to result from the planned special exposure are unavailable or impractical.

RH-1205. (Cont'd)

b. The licensee or registrant (and employer if the employer is not the licensee) specifically authorizes the planned special exposure, in writing, before the exposure occurs.

c. Before a planned special exposure, the licensee or registrant ensures that the individuals involved are:

1. Informed of the purpose of the planned operation;

2. Informed of the estimated doses and associated potential risks and specific radiation levels or other conditions that might be involved in performing the task; and

3. Instructed in the measures to be taken to keep the dose ALARA considering other risks that may be present.

d. Prior to permitting an individual to participate in a planned special exposure, the licensee or registrant ascertains prior doses as required by RH-1500.d. during the lifetime of the individual for each individual involved.

e. Subject to RH-1200.b., the licensee or registrant does not authorize a planned special exposure that would cause an individual to receive a dose from all planned special exposures and all doses in excess of the limits to exceed:

1. The numerical values of any of the dose limits in RH-1200.a., in any year; and

2. Five times the annual dose limits in RH-1201.a. during the individual's lifetime.

f. The licensee or registrant maintains records of the conduct of a planned special exposure in accordance with RH-1500.e. and submits a written report in accordance with RH-1504.

g. The licensee or registrant records the best estimate of the dose resulting from the planned special exposure in the individual's record and informs the individual, in writing, of the dose within thirty (30) days from the date of the planned special exposure. The dose from planned special exposures is not to be considered in controlling future occupational dose of the individual under RH-1201.a. but is to be included in evaluations required by RH-1205.d and e.

RH-1206 <u>Occupational Dose Limits for Minors.</u>

The annual occupational dose limits for minors are ten (10%) percent of the annual dose limits specified for adult workers in RH-1200.

RH-1207 Dose to an Embryo/Fetus.

a. The licensee or registrant shall ensure that the dose equivalent to the embryo/fetus during the entire pregnancy, due to occupational exposure of a declared pregnant woman, does not exceed 0.5 rem (5 mSv). (For recordkeeping requirements, see RH-1500.g.)

b. The licensee or registrant shall make efforts to avoid substantial variation above a uniform monthly exposure rate to a declared pregnant woman so as to satisfy the limit in Paragraph a of this Section.

c. The dose equivalent to the embryo/fetus is the sum of:

1. The deep-dose equivalent to the declared pregnant woman; and

2. The dose equivalent to the embryo/fetus resulting from radionuclides in the embryo/fetus and radionuclides in the declared pregnant woman.

d. If the dose equivalent to the embryo/fetus is found to have exceeded 0.5 rem (5 mSv), or is within 0.05 rem (0.5 mSv) of this dose, by the time the woman declares the pregnancy to the licensee or registrant, the licensee or registrant shall be deemed to be in compliance with RH-1207.a., if the additional dose to the embryo/fetus does not exceed 0.05 rem (0.5 mSv) during the remainder of the pregnancy.

RH-1208 Dose Limits for Individual Members of the Public.

a. Each licensee or registrant shall conduct operations so that:

1. The total effective dose equivalent to individual members of the public from the licensed or registered operation does not exceed 0.1 rem (1 millisievert) in a year, exclusive of the dose contribution from the background radiation, from any medical administration the individual has received, from exposure to individuals administered radioactive material and released in accordance with RH-1214, from voluntary participation in medical research program, and from licensee's disposal of radioactive material into sanitary sewerage in accordance with RH-1402; and

2. The dose in any unrestricted area from external sources, exclusive of the dose contributions from patients administered radioactive material and released in accordance with RH-1214, does not exceed 0.002 rem (0.02 millisievert) in any one hour.

RH-1208. (Cont'd)

b. If the licensee or registrant permits members of the public to have access to controlled areas, the limits for members of the public continue to apply to those individuals.

c. A licensee or license applicant or registrant may apply for prior Department authorization to operate up to an annual dose limit for an individual member of the public of 0.5 rem (5 mSv). The licensee or license applicant or registrant shall include the following information in this application:

1. Demonstration of the need for and the expected duration of operations in excess of the limit in RH-1208.a. of this Section;

2. The licensee's or registrant's program to assess and control dose within the 0.5 rem (5 mSv) annual limit; and

3. The procedures to be followed to maintain the dose as low as is reasonably achievable.

d. In addition to the requirements of this Part, a licensee subject to the provisions of EPA's generally applicable environmental radiation standards in 40 CFR Part 190 shall comply with those standards.

e. The Department may impose additional restrictions on radiation levels in unrestricted areas and on the total quantity of radionuclides that a licensee may release in effluents in order to restrict the collective dose.

RH-1209. Compliance with Dose Limits for Individual Members of the Public.

a. The licensee or registrant shall make or cause to be made, as appropriate, surveys of radiation levels in unrestricted and controlled areas and radioactive materials in effluents released to unrestricted and controlled areas to demonstrate compliance with the dose limits for individual members of the public in RH-1208.

b. A licensee or registrant shall show compliance with the annual dose limit in RH-1208 by:

1. Demonstrating by measurement or calculation that the total effective dose equivalent to the individual likely to receive the highest dose from the licensed operation does not exceed the annual dose limit; or

RH-1209. (Cont'd)

2. Demonstrating that:

A. The annual average concentrations of radioactive material released in gaseous and liquid effluents at the boundary of the unrestricted area do not exceed the values specified in Table 2 of Appendix G to RH-1000 through RH-2110; and

B. If an individual were continually present in an unrestricted area, the dose from external sources would not exceed 0.002 rem (0.02 mSv) in an hour and 0.05 rem (0.5 mSv) in a year.

c. Upon approval from the Department, the licensee may adjust the effluent concentration values in Appendix G to RH-1000 through RH-2110, Table 2, for members of the public, to take into account the actual physical and chemical characteristics of the effluents (e.g., aerosol size distribution, solubility, density, radioactive decay equilibrium, chemical form).

RH-1210. Radioactivity in Effluents to Uncontrolled Areas.

a. A licensee shall not possess, use, or transfer licensed material so as to release to an uncontrolled area radioactive material in concentrations which exceed the limits specified in RH-2200, Appendix A, Table II of this Part, except as authorized pursuant to RH-1401 or Subparagraph b of this Paragraph. For purposes of this Paragraph, concentrations may be averaged over a period not greater than one (1) year.

b. An application for a license or amendment may include proposed limits higher than those specified Subparagraph a of this Paragraph. The Department will in approve the proposed limits if the applicant demonstrates:

1. That the applicant has made a reasonable effort to minimize the radioactivity contained in effluents to uncontrolled areas; and

2. That it is not likely that radioactive material discharged in the effluent would result in the exposure of an individual to concentrations of radioactive material in air or water exceeding the limits specified in RH-2200, Appendix A, Table II of this Section.

c. An application for high limits pursuant to Subparagraph b of this Paragraph shall include information demonstrating that the applicant has made a reasonable effort to minimize the radioactivity discharged in effluents to uncontrolled areas and shall include, as pertinent.

1. Information as to flow rates, total volume of effluent, peak concentration of each radionuclide in the effluent and concentration of each radionuclide in the effluent averaged over a period of one (1) year at the point where the effluent leaves a stack, tube, pipe, or similar conduit.

2. A description of the properties of the effluents, including:

   A. Chemical composition;

   B. Physical characteristics, including suspended solids content in liquid effluents and nature of gas or aerosol for air effluents;

   C. The Hydrogen ion concentrations (pH) of liquid effluents; and

   D. The size range of particulates in effluents released into air.

3. A description of the anticipated human occupancy in the uncontrolled area where the highest concentration of radioactive material from the effluent is expected and, in the case of a river or stream, a description of water uses downstream from the point of release of the effluent.

4. Information as to the highest concentration of each radionuclide in an uncontrolled area, including anticipated concentrations averaged over a period of one (1) year:

   A. In air at any point of human occupancy; or

   B. In water at points of use downstream from the point of release of the effluent.

5. The background concentration of radionuclides in the receiving river or stream prior to the release of liquid effluent.

6. A description of the environmental monitoring equipment, including sensitivity of the system and procedures and calculations to determine concentrations of radionuclides in the uncontrolled area and possible reconcentrations of radionuclides.

7. A description of the waste treatment facilities and procedures used to reduce the concentration of radionuclides in effluents prior to their release.

d. For the purposes of this Paragraph, the concentration limits in RH-2200, Appendix A, Table II of this Section shall apply at the boundary of the controlled area. The concentration of radioactive material discharged through a stack, pipe or similar conduit may be determined with respect to the point where the material leaves the conduit. If the conduit discharges within the controlled area, the concentration at the boundary may be determined by applying appropriate factors for dilution, dispersion or decay between the point of discharge and the boundary.

e. In addition to limiting concentrations in effluent streams, the Department may limit quantities of radioactive materials released in air or water during a specified period of time if it appears that the daily intake resulting from continuous exposure to air or water containing one-third the concentration of radioactive materials specified in RH-2200, Appendix A, Table II of this Section.

f. The provisions of this Paragraph do not apply to disposal of radioactive material into sanitary sewerage systems, which is governed by RH-1402.

g. <u>Soil and vegetation limiting concentrations</u>

1. No licensee shall possess, receive, use, or transfer radioactive material in such a manner as to cause contamination of soil or vegetation the extent that the contamination exceeds the to following on a dry weight basis:

A. In unrestricted areas, the concentration limits specified in RH-2200, Appendix A, Table II, Column 2, with the units changed from µCi/ml to µCi/gm; and

B. In restricted areas, the concentration limits specified in RH-2200, Appendix A, Table I, Column 2, with the units changed from µCi/ml to µCi/gm.

2. Where combinations of radionuclides are involved, the sum of the ratios between the concentrations present and the limits specified in RH-1203.e. shall not exceed one.

3. Notwithstanding the limits imposed by RH-1210, the concentration of Radium-226 or Radium-228 in soil averaged over any 100 square meters shall not exceed the background level by more than:

A. 5 pCi/gm, averaged over the first 15 cm of soil below the surface; and

RH-1210. (Cont'd)

B. 15 pCi/gm, averaged over 15 cm thick layers of soil more than 15 cm below the surface.

RH-1211. Orders Requiring Furnishing of Bioassay Services.

Where necessary or desirable in order to aid in determining the extent of an individual's exposure to concentrations of radioactive material, the Department may require a licensee to make available to the individual appropriate bioassay services and to furnish a copy of the reports of such services to the Department.

RH-1212. Leak Tests.

a. Each sealed radioactive source possessed under the provisions of a specific license, other than Hydrogen-3 (Tritium), with a half-life greater than thirty (30) days and in any form other than gas shall be tested for leakage and/or contamination prior to initial use and at intervals specified by the license. If there is reason to suspect that a sealed source might have been damaged, it shall be tested for leakage before further use.

b. Leak tests shall be capable of detecting the presence of 0.005 microcurie of removable contamination. Any test conducted pursuant to RH-1212 which reveals the presence of 0.005 microcurie or more of removable contamination shall be considered evidence that the sealed source is leaking. The licensee shall immediately withdraw the source from use and shall cause it to be decontaminated and repaired or to be disposed of in accordance with RH-501.

c. Within five (5) days after obtaining results of the test, the licensee shall file a report with the Department describing the equipment involved, the test results, and the corrective action taken.

d. Where sealed sources are permanently mounted in devices or equipment, tests for contamination and leakage may be made by wiping appropriate accessible surfaces and measuring these wipes for transferred contamination. Records of leak test results shall be kept in units of microcuries and maintained for inspection by the Department.

RH-1213. Surface Contamination Limits for Facilities and Equipment

a. Prior to vacating any facility or releasing areas or equipment for unrestricted use, each licensee shall ensure that radioactive contamination has been removed to levels as low as reasonably achievable. In no case shall the licensee vacate a facility or release areas or equipment for unrestricted use until radioactive surface contamination levels are below the limits specified in RH-1213.b.

b. ACCEPTABLE SURFACE CONTAMINATION LEVELS

NUCLIDE[1]	AVERAGE[2,3,6]	MAXIMUM[2,4,6]	REMOVABLE[2,3,5,6]
U-nat, U-235, U-238, and associated decay products except Ra-226, Th-230, Ac-227, and Pa-231	5,000 dpm alpha/ 100 cm^2	15,000 dpm alpha/ 100 cm^2	1,000 dpm alpha/ 100 cm^2
Transuranics, Ra-226 Ra-228, Th-230, Th-228, Pa-231, Ac-227, I-129	100 dpm/ 100 cm^2	300 dpm/ 100 cm^2	20 dpm/ 100 cm^2
Th-nat, Th-232, Sr-90, Ra-223, Ra-224, U-232, I-125, I-126, I-131, I-133	1,000 dpm/ 100 cm^2	3,000 dpm/ 100 cm^2	200 dpm/ 100 cm^2
Beta-gamma emitters (nuclides with decay modes other than alpha emission or spontaneous fission) except Sr-90 and others noted above.	5,000 dpm beta, gamma/ 100 cm^2	15,000 dpm, beta, gamma/ 100 cm^2	1,000 dpm beta gamma/ 100 cm^2

FOOTNOTES FOR TABLE RH-1213.b.: ACCEPTABLE SURFACE CONTAMINATION LEVELS

[1] Where surface contamination by both alpha and beta-gamma emitting nuclides exists, the limits established for alpha and beta-gamma emitting nuclides should apply independently.

[2] As used in this table, dpm (disintegrations per minute) means the rate of emission by radioactive material as determined by correcting the counts per minute observed by an appropriate detector for background efficiency, and geometric factors associated with the instrumentation.

[3] Measurements of average contamination level should not be averaged over more than one square meter. For objects of less surface area, the average should be derived for each object.

[4] The maximum contamination level applies to an area of not more than 100 cm^2.

[5] The amount of removable radioactive material per 100 cm^2 of surface area should be determined by wiping that area with dry filter or soft absorbent paper, applying moderate pressure, and assessing the amount of radioactive material on the wipe with an appropriate instrument of known efficiency. When removable contamination on objects of less surface area is determined, the pertinent levels should be reduced proportionally and the entire surface should be wiped.

[6] The average and maximum radiation levels associated with surface contamination resulting from beta-gamma emitters should not exceed 0.2 mrad/hr at 1 cm and 1.0 mrad/hr at 1 cm, respectively, measured through not more than 7 milligrams per square centimeter of total absorber.

RH-1214. Release of Individuals Containing Radiopharmaceuticals or Permanent Implants.

a. The licensee may authorize the release from its control of any individual who has been administered Iodine 131 as Sodium Iodide if the total patient concentration has been determined to be to be thirty (30) millicuries or less.

b. The licensee may authorize the release from its control of any individual who has been administered radiopharmaceuticals with the exception of Iodine 131 as Sodium Iodide as referenced in RH-1214.a. or permanent implants containing radioactive material if the total effective dose equivalent to any other individual from exposure to the released individual is not likely to exceed 0.5 rem (5 millisieverts).

NOTE: **U.S. Nuclear Regulatory Commission Regulatory Guide 8.39, "Release of Patients Administered Radioactive Materials," describes methods for calculating doses to other individuals and contains tables of activities not likely to cause doses exceeding 0.5 rem five (5) millisieverts.**

c. The licensee shall provide the released individual with instructions, including written instructions, on actions recommended to maintain doses to other individuals as low as is reasonably achievable if the total effective dose equivalent to any other individual is likely to exceed 0.1 rem (one (1) millisieverts). If the dose to a breast-feeding infant or child could exceed 0.1 rem (one (1) millisieverts) assuming there were no interruption of breast-feeding, the instructions shall also include:

1. Guidance on the interruption or discontinuation of breast-feeding; and

2. Information on the consequences of failure to follow the guidance.

d. The licensee shall maintain a record of the basis for authorizing the release of an individual, for three (3) years after the date of release, if the total effective dose equivalent is calculated by:

1. Using the retained activity rather than the activity administered;

2. Using an occupancy factor less than 0.25 at one (1) meter;

3. Using the biological or effective half-life; or

4. Considering the shielding by tissue.

RH-1214. (Cont'd)

e. The licensee shall maintain a record, for three (3) years after the date of release, that instructions were provided to a breast-feeding woman if the radiation dose to the infant or child from continued breast-feeding could result in a total effective dose equivalent exceeding 0.5 rem (five (5) millisieverts).

RH-1215. Reserved.

RH-1216. Radiological Criteria for Unrestricted Use.

A site will be considered acceptable for unrestricted use if the residual radioactivity that is distinguishable from background radiation results in a TEDE to an average member of the critical group that does not exceed 25 mrem (0.25 mSv) per year, including that from groundwater sources of drinking water, and the residual radioactivity has been reduced to levels that are as low as reasonably achievable (ALARA). Determination of the levels which are ALARA must take into account consideration of any detriments, such as deaths from transportation accidents, expected to potentially result from decontamination and waste disposal.

RH-1217. Criteria for License Termination Under Restricted Conditions.

A site will be considered acceptable for license termination under restricted conditions if:

a. The licensee can demonstrate that further reductions in residual radioactivity necessary to comply with the provisions of RH-1217 would result in net public or environmental harm or were not being made because the residual levels associated with restricted conditions are ALARA. Determination of the levels which are ALARA must take into account consideration of any detriments, such as traffic accidents, expected to potentially result from decontamination and waste disposal;

b. The licensee has made provisions for legally enforceable institutional controls that provide reasonable assurance that the TEDE from residual radioactivity distinguishable from background to the average member of the critical group will not exceed 25 mrem (0.25 mSv) per year;

c. The licensee has provided sufficient financial assurance to enable an independent third party, including a governmental custodian of a site, to assume and carry out responsibilities for any necessary control and maintenance of the site. Acceptable financial assurance mechanisms are:

1. Funds placed into an account segregated from the licensee's assets and outside the licensee's administrative control as described in RH-409.h.6.A.;

2. Surety method, insurance, or other guarantee method as described in RH-409.h.6.B.;

3. A statement of intent in the case of State or local Government licensees, as described in RH-409.h.6.D. or;

4. When a government entity is assuming custody and ownership of a site, an arrangement that is deemed acceptable by such governmental entity.

d. The licensee has submitted a decommissioning plan or License Termination Plan (LTP) to the Department indicating the licensee's intent to decommission in accordance with RH-410.d. and specifying that the licensee intends to decommission by restricting use of the site. The licensee shall document in the LTP or decommissioning plan how the advice of individuals and institutions in the community who may be affected by the decommissioning has been sought and incorporated, as appropriate, following analysis of that advice.

1. Licensees proposing to decommission by restricting use of the site shall seek advice from such affected parties regarding the following matters concerning the proposed decommissioning:

A. Whether provisions for institutional controls proposed by the licensee:

i. Will provide reasonable assurance that the TEDE from residual radioactivity distinguishable from background to the average member of the critical group will not exceed 25 mrem (0.25 mSv) TEDE per year;

ii. Will be enforceable; and

iii. Will not impose undue burdens on the local community or other affected parties.

B. Whether the licensee has provided sufficient financial assurance to enable an independent third party, including a governmental custodian of a site, to assume and carry out responsibilities for any necessary control and maintenance of the site.

2. In seeking advice on the issues identified in RH-1217.d.1., the licensee shall provide for:

   A. Participation by representatives of a broad cross section of community interest who may be affected by the decommissioning:

   B. An opportunity for a comprehensive, collective discussion on the issues by the participants represented; and

   C. A publicly available summary of the results of all such discussions, including a description of the individual viewpoints of the participants on the issues and the extent of agreement and disagreement among the participants on the issues; and

e. Residual radioactivity at the site has been reduced so that if the institutional controls were no longer in effect, there is reasonable assurance that the TEDE from residual radioactivity distinguishable from background to the average member of the critical group is as low as reasonably achievable and would not exceed either:

   1. 100 mrem (1mSv) per year; or

   2. 500 mrem (1mSv) per year provided the licensee

      A. Demonstrates that further reductions in residual radioactivity necessary to comply with the100 mrem/yr (1mSv/y) value of RH-1217.e.1. are not technically achievable, would be prohibitively expensive, or would result in net public or environmental harm;

      B. Makes provisions for durable institutional controls;

      C. Provides sufficient financial assurance to enable a responsible government entity or independent third party, including a governmental custodian of a site, both to carry out periodic rechecks of the site no less frequently than every five (5) years to assure that the institutional controls remain in place as necessary to meet the criteria of RH-1217.b. and to assume and carry out responsibilities for any necessary control and maintenance of those controls. Acceptable financial assurance mechanisms are those in RH-1217.c.

RH-1218. Alternate Criteria for License Termination.

a. The Department may terminate a license using alternate criteria greater than the dose criterion of RH-1216, RH-1217.b., and RH-1217.d.1.i.A, if the licensee:

1. Provides assurance that public health and safety would continue to be protected, and that it is unlikely that the dose from all man-made sources combined, other than medical, would be more than the 100 mrem/y (1 mSv/y) limit of Part C (RH-1208 and RH-1209), by submitting an analysis of possible sources of exposure;

2. Has employed to the extent practical restrictions on site use according to the provisions of RH-1217 in minimizing exposures at the site; and

3. Reduces doses to ALARA levels, taking into consideration any detriments such as traffic accidents expected to potentially result from decontamination and waste disposal.

4. Has submitted a decommissioning plan or License Termination Plan (LTP) to the Department indicating the licensee's intent to decommission in accordance with RH-410.d. and specifying that the licensee proposes to decommission by use of alternate criteria. The licensee shall document in the decommissioning plan or LTP how the advice of individuals and institutions in the community who may be affected by the decommissioning has been sought and addressed, as appropriate, following analysis of that advice. In seeking such advice, the licensee shall provide for:

A. Participation by representatives of a broad cross section of community interests who may be affected by the decommissioning;

B. An opportunity for a comprehensive, collective discussion on the issues by the participants represented; and

C. A publicly available summary of the results of all such discussions, including a description of the individual viewpoints of the participants on the issues and the extent of agreement and disagreement among the participants on the issues.

RH-1218. (Cont'd)

b. The use of alternate criteria to terminate a license requires the approval of the Department after consideration of the Department's staff recommendations that will address any comments provided by the U.S. Environmental Protection Agency, any other State Governmental organization, and any public comments submitted pursuant to RH-1219.

RH-1219. Public Notification and Public Participation.

Upon the receipt of an LTP or decommissioning plan from the licensee, or a proposal by the licensee for release of a site pursuant to RH-1217 or RH-1218, or whenever the Department deems such notice to be in the public interest, the Department shall:

a. Notify and solicit comments from:

1. Local and State government organizations in the vicinity of the site and any Indian Nation or any other indigenous people that have treaty of statutory rights that could be affected by the decommissioning; and

2. The Environmental Protection Agency (EPA) for cases where the licensee proposes to release a site pursuant to RH-1218.

b. Publish a notice in a forum, such as local newspapers, letters to State or local organizations, or other appropriate forum, that is readily accessible to individuals in the vicinity of the site, and solicit comments from affected parties.

RH-1220. Minimization of Contamination.

Applicants for licenses, other than renewals, shall describe in the application how facility design and procedures for operation will minimize, to the extent practicable, contamination of the facility and the environment, facilitate eventual decommissioning, and minimize, to the extent practicable, the generation of radioactive waste.

RH-1221.
RH-1299. Reserved.

PART D.
PRECAUTIONARY PROCEDURES

RH-1300. Surveys.

a. As used in these Regulations, "survey" means an evaluation of actual or potential radiation hazards incident to the production, use, release, disposal and/or presence of sources of radiation under a specific set of conditions. When appropriate, such evaluation includes, but is not limited to, tests, a physical survey of the location of materials and equipment, and measurements of levels of radiation or concentrations of radioactive material present.

b. Each licensee or registrant shall make or cause to be made, surveys that:

1. May be necessary for the licensee or registrant to comply with the Regulations in this Part; and

2. Are reasonable under the circumstances to evaluate:

A. The magnitude and extent of radiation levels,

B. Concentrations or quantities of radioactive material, and

C. The potential radiological hazards.

c. The licensee or registrant shall ensure that instruments and equipment used for quantitative radiation measurements (e.g., dose rate and effluent monitoring are calibrated periodically for the radiation measured.)

RH-1301. Personnel Monitoring.

a. All personnel dosimeters (except for direct and indirect reading pocket ionization chambers and those dosimeters used to measure the dose to the extremities) that require processing to determine the radiation dose and that are used by licensees or registrants to comply with RH-1302.a, with other applicable provisions of these Regulations, or with conditions specified in a license must be processed and evaluated by a dosimetry processor:

1. Holding current personnel dosimetry accreditation from the National Voluntary Laboratory Accreditation Program (NVLAP) of the National Institute of Standards and Technology [formerly called National Bureau of Standards], and

2. Approved in this accreditation process for the type of radiation or radiations included in the NVLAP program that most closely approximates the type of radiation or radiations for which the individual wearing the dosimeter is monitored.

RH-1302. Conditions Requiring Individual Monitoring of External and Internal Occupational Dose.

Each licensee or registrant shall monitor exposures to radiation and radioactive material at levels sufficient to demonstrate compliance with the occupational dose limits this Part. As a minimum: of

a. Each licensee or registrant shall monitor occupational exposure to radiation and shall supply and require the use of individual monitoring devices by:

1. Adults likely to receive, in one (1) year from sources external to the body, a dose in excess of ten (10) percent of the limits in RH-1200.a;

2. Minors and declared pregnant women likely to receive, in one (1) year from sources external to the body, a dose in excess of ten (10) percent of any of the applicable limits in RH-1206 or RH-1207; and

3. Declared pregnant women likely to receive during the entire pregnancy, from radiation sources external to the body, a deep dose equivalent in excess of 0.1 rem (1 mSv) and

NOTE: **All of the occupational doses in RH-1200 continues to be applicable to the declared pregnant worker as long as the embryo/fetus dose limit is not exceeded**.

4. Individuals entering a high or very high radiation area.

b. Each licensee or registrant shall monitor (See RH-1203) the occupational intake of radioactive material by and assess the committed effective dose equivalent to:

1. Adults likely to receive, in one (1) year, an intake in excess of 10 percent of the applicable ALI(s) in Table 1, Columns 1 and 2, of Appendix G to RH-1000 through RH-2110; and

2. Minors and declared pregnant women likely to receive, in one (1) year, a committed effective dose equivalent in excess of 0.05 rem (0.5 mSv).

RH-1303. Caution Signs, Labels and Signals.

a. Symbol.

1. Except as otherwise authorized by the Department, symbols prescribed by this Section shall use the conventional radiation caution colors (magenta, or purple, or black, on yellow background).

2. The symbol prescribed by this Section is the conventional three-bladed design. The cross-hatched area shall be magenta, or purple, or black and the background yellow.

3. Notwithstanding the requirements of RH-1303.a. of this Section, licensees or registrants are authorized to label sources, source holders, or device components containing sources of licensed materials that are subjected to high temperatures, with conspicuously etched or stamped radiation caution symbols and without a color requirement.

4. In addition to the contents of signs and labels prescribed in this Section, a licensee or registrant may provide on or near such signs and labels any additional information which may be appropriate in aiding individuals to minimize exposure to radiation.

STANDARD RADIATION SYMBOL

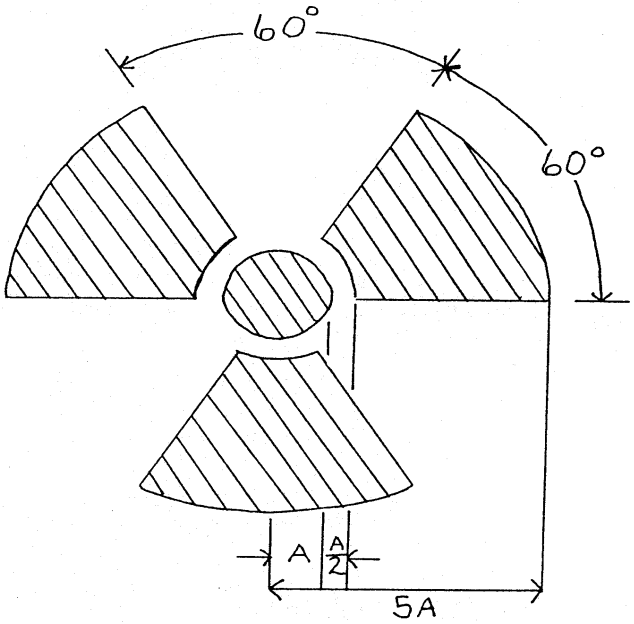

RH-1303. (Cont'd)

b. Radiation areas. Each radiation area shall be conspicuously posted with a sign or signs bearing the radiation symbol and the words:

CAUTION	**or**	**DANGER**
RADIATION AREA		**RADIATION AREA**

c. High radiation areas.

1. Each high radiation area shall be conspicuously posted with a sign or signs bearing the radiation symbol and the words:

CAUTION	**or**	**DANGER**
HIGH RADIATION AREA		**HIGH RADIATION AREA**

2. The licensee or registrant shall ensure that each entrance or access point to a high radiation area has one or more of the following features:

   A. A control device that, upon entry into the area, causes the level of radiation to be reduced below that level at which an individual might receive a deep-dose equivalent of 0.1 rem (1 mSv) in one (1) hour at 30 centimeters from the radiation source or from any surface that the radiation penetrates;

   B. A control device that energizes a conspicuous visible or audible alarm signal so that the individual entering the high radiation area and the supervisor of the activity are made aware of the entry; or

   C. Entryways that are locked, except during periods when access to the areas is required, with positive control over each individual entry.

3. In place of the controls required by RH-1303.c.2 of this Section for a high radiation area, the licensee or registrant may substitute continuous direct or electronic surveillance that is capable of preventing unauthorized entry.

4. A licensee or registrant may apply to the Department for approval of alternative methods for controlling access to high radiation areas.

5. The licensee or registrant shall establish the controls required by RH-1303.c.2 and RH-1303.c.4 of this Section in a way that does not prevent individuals from leaving a high radiation area.

6. Control is not required for each entrance or access point to a room or other area that is a high radiation area solely because of the presence of radioactive materials prepared for transport and packaged and labeled in accordance with the regulations of the Department of Transportation provided that:

   A. The packages do not remain in the area longer than three (3) days, and

   B. The dose rate at one (1) meter from the external surface of any package does not exceed 0.01 rem (0.1 mSv) per hour.

7. Control of entrance or access to rooms or other areas in hospitals is not required solely because of the presence of patients containing radioactive material, provided that there are personnel in attendance who will take the necessary precautions to prevent the exposure of individuals to radiation or radioactive material in excess of the limits established in this Part and to operate within the ALARA provisions of the licensee's radiation protection program.

d. 1. Very high radiation areas. In addition to the requirements in RH-1311, the licensee or registrant shall institute additional measures to ensure that an individual is not able to gain unauthorized or inadvertent access to areas in which radiation levels could be encountered at 500 rads (5 grays) or more in one (1) hour at one (1) meter from a radiation source or any surface through which the radiation penetrates.

2. Posting of very high radiation areas. The licensee or registrant shall post each very high radiation area with a conspicuous sign or signs bearing the radiation symbol and words:

GRAVE DANGER, VERY HIGH RADIATION AREA

e. Very high radiation areas - irradiators.

1. Each area in which there may exist radiation levels in excess of 500 rads (5 grays) in one (1) hour at one (1) meter from a sealed radioactive source[2/] that is used to irradiate materials must meet the following requirements.

RH-1303. (Cont'd)

A. Each entrance or access point must be equipped with entry control devices which:

i. Function automatically to prevent any individual from inadvertently entering the area when very high radiation levels exist;

ii. Permit deliberate entry into the area only after a control device is actuated that causes the radiation level within the area, from the sealed source, to be reduced below that at which it would be possible for an individual to receive a deep-dose equivalent in excess of 0.1 rem (1 mSv) in one (1) hour; and

iii. Prevent operation of the source if the source would produce radiation levels in the area that could result in a deep-dose equivalent to an individual in excess of 0.1 rem (1 mSv) in one (1) hour.

B. Additional control devices must be provided so that upon failure of the entry control devices to function as required by RH-1303.e.1.A. of this Section:

i. The radiation level within the area, from the sealed source, is reduced below that at which it would be possible for an individual to receive a deep-dose equivalent in excess of 0.1 rem (1 mSv) in one (1) hour; and

ii. Conspicuous visible and audible alarm signals are generated to make an individual attempting to enter the area aware of the hazard and at least one other authorized individual, who is physically present, familiar with the activity, and prepared to render or summon assistance, aware of the failure of the entry control devices.

C. The licensee shall provide control devices so that, upon failure or removal of physical radiation barriers other than the source's shielded storage container:

i. The radiation level from the source is reduced below that at which it would be possible for an individual to receive a deep-dose equivalent in excess of 0.1 rem (1 mSv) in one (1) hour; and

ii. Conspicuous visible and audible alarm signals are generated to make potentially affected individuals aware of the hazard and the licensee or at least one other individual, who is familiar with the activity and prepared to render or summon assistance, aware of the failure or removal of the physical barrier.

D. When the shield for the stored source is a liquid, the licensee shall provide means to monitor the integrity of the shield and to signal, automatically, loss of adequate shielding.

E. Physical radiation barriers that comprise permanent structural components, such as walls, that have no credible probability of failure or removal in ordinary circumstances need not meet the requirements of C and D of this Paragraph.

F. Each area must be equipped with devices that will automatically generate conspicuous visible and audible alarm signals to alert personnel in the area before the source can be put into operation and in sufficient time for any individual in the area to operate a clearly identified control device, which must be installed in the area and which can prevent the source from being put into operation.

G. Each area must be controlled by use of such administrative procedures and such devices as are necessary to ensure that the area is cleared of personnel prior to each use of the source.

H. Each area must be checked by a radiation measurement to ensure that, prior to the first individual's entry into the area after any use of the source, the radiation level from the source in the area is below that at which it would be possible for an individual to receive a deep-dose equivalent in excess of 0.1 rem (1 mSv) in one (1) hour.

I. The entry control devices required in RH-1303.e.1.A. must have been tested for proper functioning (See RH-1500 for recordkeeping requirements).

i. Testing must be conducted prior to initial operation with the source of radiation on any day (unless operations were continued uninterrupted from the previous day);

ii. Testing must be conducted prior to resumption of operation of the source of radiation after any unintended interruption; and

iii. The licensee shall submit and adhere to a schedule for periodic tests of the entry control and warning systems.

J. The licensee may not conduct operations, other than those necessary to place the source in safe condition or to effect repairs on controls, unless control devices are functioning properly.

K. Entry and exit portals that are used in transporting materials to and from the irradiation area, and that are not intended for use by individuals, must be controlled by such devices and administrative procedures as are necessary to physically protect and warn against inadvertent entry by any individual through these portals. Exit portals for processed materials must be equipped to detect and signal the presence of any loose radiation sources that are carried toward such an exit and to automatically prevent loose radiation sources from being carried out of the area.

2. Persons holding licenses or applicants for licenses for radiation sources that are within the purview of Part D of this Section and that will be used in a variety of positions or in locations, such as open fields or forests, that make it impracticable to comply with certain requirements of Part D of this Section, such as those for the automatic control of radiation levels, may apply to the Director, Division of Radiation Control and Emergency Management, for approval of the use of alternative safety measures. Any alternative safety measures must provide a degree of personnel protection at least equivalent to those specified in Part D of this Section.

At least one of the alternative measures must include an entry-preventing interlock control based on a measurement of the radiation that ensures the absence of high radiation levels before an individual can gain access to the area where such radiation sources are used.

3. The entry control devices required by RH-1303.e.1.A. and B. of this Section must be established in such a way that no individual will be prevented from leaving the area.

f. Airborne radioactivity area.

1. As used in these Regulations, "airborne radioactivity area" means:

A. Any room, enclosure or operating area in which airborne radioactive materials exist in concentrations in excess of the amounts specified in RH-2200, Appendix A, Table 1, Column 1; or

B. Any room, enclosure or operating area in which airborne radioactive material exists in concentrations which, averaged over the number of hours in any week during which individuals are in the area, exceed twenty-five (25%) percent of the amounts specified in RH-2200, Appendix A, Table 1, Column 1.

2. Each airborne radioactivity area shall be conspicuously posted with a sign or signs bearing the radiation symbol and the words:

CAUTION **or** **DANGER**

AIRBORNE RADIOACTIVITY AREA **AIRBORNE RADIOACTIVITY AREA**

3. Use of process or other engineering controls. The licensee shall use, to the extent practicable, process or other engineering controls (e.g., containment or ventilation) to control the concentrations of radioactive material in air.

4. Use of other controls.

A. When it is not practicable to apply process or other engineering controls to control the concentrations of radioactive material in air to values below those that define an airborne radioactivity area, the licensee shall, consistent with maintaining the total effective dose equivalent ALARA, increase monitoring and limit intakes by one or more of the following means:

i. Control of access;

ii. Limitation of exposure times;

iii. Use of respiratory protection equipment; or

iv. Other controls.

B. If the licensee performs an ALARA analysis to determine whether or not respirators should be used, the licensee may consider safety factors other than radiological factors. The licensee should also consider the impact of respirator use on workers' industrial health and safety.

5. Use of individual respiratory protection equipment.

A. If the licensee assigns or permits the use of respiratory protection equipment to limit the intake of radioactive material.

i. The licensee shall use only respiratory protection equipment that is tested and certified or had certification extended by the National Institute for Occupational Safety and Health (NIOSH) except as otherwise noted in this Part.

ii. If the licensee wishes to use equipment that has not been tested or certified by NIOSH, or for which there is no schedule for testing or certification, the licensee shall submit an application for authorized use of this equipment, except as provided in this Part. The application must include evidence that the material and performance characteristics of the equipment are capable of providing the proposed anticipated conditions of use. This must be demonstrated either by licensee testing

iii. The licensee shall implement and maintain a respiratory protection program that includes:

(a). Air sampling sufficient to identify the potential hazard, permit proper equipment selection, and estimate doses;

(b). Surveys and bioassays, as necessary, to evaluate actual intakes;

(c). Testing of respirators for operability (user seal check for face sealing devices and functional check for others) immediately prior to each use;

(d). Written procedures regarding:

(i) Monitoring, including air sampling and bioassays;

(ii) Supervision and training of respirator users;

(iii) Fit testing;

(iv) Respirator selection;

(v) Breathing air quality;

(vi) Inventory and control;

(vii) Storage, issuance, maintenance, repair, testing, and quality assurance of respiratory protection equipment;

(viii) Recordkeeping; and

(ix) Limitations on periods of respirator use and relief from respirator use;

(e). Determination by a physician prior to initial fitting of respirators, and at least every twelve (12) months thereafter or periodically at a frequency determined by a physician, that the individual user is medically fit to use the respiratory

(f). Fit testing, with fit factor greater than or equal to (≥) 10 times the APF for negative pressure devices, and a fit factor greater than or equal to (≥) 500 for any positive pressure, continuous flow, and pressure-demand devices, before the first field use of tight fitting, face-sealing respirators and periodically thereafter at a frequency not to exceed one (1) year. Fit testing must be performed with the facepiece operating in the negative pressure mode.

iv. The licensee shall advise each respirator user that the user may leave the area at any time for relief from respirator use in the event of equipment malfunction, physical or psychological distress, procedural or communication failure, significant deterioration of operating conditions, or any other conditions that might require such relief.

v. The licensee shall also consider limitations appropriate to the type and mode of use. When selecting respiratory devices the licensee shall provide for vision correction, adequate communication, low temperature work environments, and the concurrent use of other safety or radiological protection equipment. The licensee shall use equipment in such a way as not to interfere with the proper operation of the respirator.

vi. Standby rescue persons are required whenever one-piece atmosphere-supplying suits, or any combination of supplied air respiratory protection device and personnel protective equipment are used from which an unaided individual would have difficulty extricating himself or herself. The standby persons must be equipped with respiratory protection devices or other apparatus appropriate for the potential hazards. The standby rescue persons shall observe or otherwise maintain continuous communication with the workers (visual, voice, signal line, telephone, radio, or other suitable means), and be immediately available to assist them in case of a failure of the air supply or for any other reason that requires relief from distress. A sufficient number of standby rescue persons must be immediately available to assist all users of this type of equipment and to provide effective emergency rescue if needed.

vii . Atmosphere-supplying respirators must be supplied with respirable air of grade D quality or better as defined by the Compressed Gas Association in publication G-7.1, “Commodity Specification for Air,” 1997 and included in the regulations of the Occupational Safety and Health Administration (29 CFR 1910.134(i)(1)(ii)(A) through (E). Grade D quality air criteria include:

(1) Oxygen content (v/v) of 19.5-23.5%;

(2) Hydrocarbon (condensed) content of five (5) milligrams per cubic meter of air or less;

(3) Carbon monoxide (CO) content of ten (10) ppm or less;

(4) Carbon dioxide content of 1,000 ppm or less; and

(5) Lack of noticeable odor.

viii. The licensee shall ensure that no objects, materials or substances, such as facial hair, or any conditions that interfere with the face-facepiece seal or valve function, and that are under the control of the respirator wearer, are present between the skin of the wearer's face and the sealing surface of a tight-fitting respirator facepiece.

ix. In estimating the dose to individuals from intake of airborne radioactive materials, the concentration of radioactive material in the air that is inhaled when respirators are worn is initially assumed to be the ambient concentration in air without respiratory protection, divided by the assigned protection factor. If the dose is later found to be greater than the estimated dose, the corrected value must be used. If the dose is later found to be less than the estimated dose, the corrected value may be used.

B. The licensee shall notify, in writing, the Director of the Division of Radiation Control and Emergency Management at least thirty (30) days before the date that respiratory protection equipment is first used under the provisions of RH-1303.f.5.A.

6. Further restrictions on the use of respiratory protection equipment.

The Department may impose restrictions in addition to those in RH-1303.f.4 and RH-1303.f.5 and Appendix E to RH-1000 through RH-2110 to:

A. Ensure that the respiratory protection program of the licensee is adequate to limit doses to individuals from intakes of airborne radioactive materials consistent with; and

B. Limit the extent to which a licensee may use respiratory protection equipment instead of process or other engineering controls.

7. Application for use of higher assigned protection factors. The licensee shall obtain authorization from the Department before using assigned protection factors in excess of those specified in Appendix E to RH-1000 through RH-2110. The Department may authorize a licensee to use higher assigned protection factors on receipt of an application that:

   A. Describes the situation for which a need exists for higher protection factors; and

   B. Demonstrates that the respiratory protection equipment provides these protection factors under the proposed conditions of use.

g. Additional requirements.

1. Each area or room in which any radioactive material, other than natural uranium or thorium, is used or stored in an amount exceeding ten (10) times the quantity of radioactive material specified in RH-2300, Appendix B, shall be conspicuously posted with a sign or signs bearing the radiation symbol and the words:

CAUTION RADIOACTIVE MATERIAL or **DANGER RADIOACTIVE MATERIAL**

2. Each area or room in which natural uranium or thorium is used or stored in an amount exceeding 100 times the quantity specified in RH-2300, Appendix B, shall be conspicuously posted with a sign or signs bearing the radiation symbol and the words:

CAUTION RADIOACTIVE MATERIAL or **DANGER RADIOACTIVE MATERIAL**

It shall also provide sufficient information[3/] to permit individuals handling or using the containers or working in the vicinity thereof, to take precautions to avoid or minimize exposures.

h. Containers.

1. Except as provided in RH-1303.h.3, each container of radioactive material shall bear a durable, clearly visible label identifying the radioactive contents.

2. A label required pursuant to RH-1303.h.1 shall bear the radiation caution symbol and the words:

CAUTION **or** **DANGER**

RADIOACTIVE MATERIAL **RADIOACTIVE MATERIAL**

It shall also provide sufficient information[3/] to permit individuals handling or using the containers or working in the vicinity thereof, to take precautions to avoid or minimize exposures.

3. Notwithstanding the provisions of RH-1303.h.1, labeling is not required:

   A. For containers that do not contain radioactive materials in quantities greater than the applicable quantities listed in RH-2793, Appendix H, of this Part;

   B. For containers containing only natural Uranium or Thorium in quantities no greater than ten (10) times the applicable quantities listed in RH-2793, Appendix H, of this Part;

   C. For containers that do not contain radioactive materials in concentrations greater than the applicable concentrations listed in Column 2, Table I, RH-2200, Appendix A, of this Part;

   D. For containers when they are attended by an individual who takes the precautions necessary to prevent the exposure of any individual to radiation or radioactive materials in excess of the limits established by these Regulations in this Part;

   E. For containers when they are in transport and packaged and labeled in accordance with regulations published by the Department of Transportation[4/];

   F. For containers which are accessible[5/] only to individuals authorized to handle or use them or to work in the vicinity thereof, provided that the contents are identified to such individuals by a readily available written record; and

   G. For manufacturing and process equipment such as piping and tanks.

i. Each licensee shall, prior to disposal of an empty uncontaminated container to unrestricted areas, remove or deface the radioactive material label or otherwise clearly indicate that the container no longer contains radioactive material.

RH-1303. (Cont'd)

j. All devices and equipment capable of producing radiation when operated shall be appropriately labeled so as to caution individuals that such devices or equipment produce radiation when operated.

k. Each radiation machine, except radiographic and fluoroscopic x-ray machines used solely in the healing arts, which is capable of producing, in any area accessible to individuals, a dose rate in excess of 10 millirems per hour shall be provided with a warning signal or light. Such a signal or light shall be so connected as to be activated automatically when the machine is "on" in order to provide adequate warning against entering the area.

RH-1304. Exceptions From Posting Requirements. Notwithstanding the provisions of RH-1303:

a. A room or area is not required to be posted with a caution sign because of the presence of a sealed source, provided the radiation level twelve (12) inches (30) centimeters from the surface of the source container or housing does not exceed five (5) millirems (0.05 mSv) per hour.

b. Rooms or other areas in hospitals that are occupied by patients are not required to be posted with caution signs provided that the patient could be released from licensee control pursuant to RH-1214.

c. Caution signs are not required to be posted in areas or rooms containing radioactive materials for periods of less than eight (8) hours provided that:

1. The materials are constantly attended during such periods by an individual who shall take the precautions necessary to prevent the exposure of any individual to radiation or radioactive materials in excess of the limits established in this Part; and

2. Such area or room is subject to the licensee's control.

d. A room or other area is not required to be posted with caution sign and control is not required for each a entrance or access point to a room or other area which is a high radiation area solely because of the presence of radioactive materials prepared for transport and packaged and labeled in accordance with regulations of the Department of Transportation.

RH-1305. Instruction of Personnel; Posting of Notice to Employees.

Instructions required for individuals working in or frequenting any portion of a restricted area are specified in Part N of this Section.

RH-1306. Storage of Sources of Radiation.

a. The licensee or registrant shall secure sources of radiation from unauthorized removal or access.

b. Sources of radiation shall not be stored in residential areas.

RH-1307. Procedures for Picking Up, Receiving and Opening Packages.

a. As used in these Regulations, Special Form means any of the following physical forms of licensed material:

1. The material is in solid form having no dimension less than 0.5 millimeter or at least one dimension greater than five (5) millimeters; does not melt, sublime or ignite in air at a temperature of 1,000^{0}F. (538^{0}C), will not shatter or crumble if subjected to the percussion test described in Appendix B of this Part; and is not dissolved or converted into dispersible form to the extent of more than 0.005 percent by weight by immersion for one week in water at 68^{0}F. (20^{0}C) or in air at 86^{0}F. (30^{0}C); or

2. The material is securely contained in a capsule having no dimension less than 0.5 millimeter or at least one dimension greater than five (5) millimeters, which will retain its contents if subjected to the tests prescribed in Appendix B of this Part; and which is constructed of materials which do not melt, sublime or ignite in air at 1,475^{0}F (802^{0}C), and do not dissolve or convert into dispersible form to the extent of more than 0.005 percent by weight by immersion for one week in water at 68^{0}F (20^{0}C) or in air at 86^{0}F (30^{0}C).

b. Procedures for picking up, receiving and opening packages. Each licensee who expects to receive a package containing. quantities of radioactive material in excess of a "Type A" quantity specified in or determined by procedures described in Appendix C of this Section, shall make arrangements:

1. To receive the package when the carrier offers it for delivery; or

2. To receive notification of the arrival of the package at the carrier's terminal and to pick up the package when the carrier offers it for delivery.

RH-1307. (Cont'd)

c. Each licensee shall:

1. Monitor the external surfaces of a labeled* package for radioactive contamination unless the package contains only radioactive material in the form of a gas or in special form as described in RH-3100.

2. Monitor the external surfaces of a labeled* package for radiation levels unless the package contains quantities of radioactive material that are less than or equal to the Type A quantity as defined RH-3100 and RH-2700; and

3. Monitor all packages known to contain radioactive material for radioactive contamination and radiation levels if there is evidence of degradation of package integrity, such as packages that are crushed, wet, or damaged.

d. The licensee shall perform the monitoring required by RH-1307.c of this Section as soon as practical after receipt of the package, but not later than three (3) hours after the package is received at the licensee's facility if it is received during the licensee's normal working hours, or not later than three (3) hours from the beginning of the next working day if it is received after working hours.

e. The licensee shall immediately notify the final delivery carrier and, by telephone and telegram, mailgram or facsimile, the Department, if packages, other than those transported by exclusive use vehicle, are found to have:

1. Removable radioactive contamination in excess of 0.001 microcurie per 100 square centimeters on the external surfaces of the package; or

2. Radiation levels at the external surface of the package in excess of 200 mRem/hr or at one (1) meter from the external surface of the package in excess of 10 mRem/hr.

f. Each licensee or registrant shall establish and maintain procedures for safely opening packages in which radioactive material is received and shall assure that such procedures are followed and that due consideration is given to special instructions for the type of package being opened.

* Labeled with a Radioactive White I, Yellow II, or Yellow III label as specified in U.S. Department of Transportation regulations, 49 CFR 172.403 and 172.436-440.

RH-1307. (Cont'd)

g. Licensees transferring special form sources in licensee-owned or licensee-operated vehicles to and from a work site are exempt from the contamination monitoring requirements of RH-1307.c of this Section, but are not exempt from the survey requirement in RH-1307.c of this Section for measuring radiation levels that is required to ensure that the source is still properly lodged in its shield.

RH-1308. Control of Material Not in Storage.

The licensee shall control and maintain constant surveillance of licensed material that is in a controlled or unrestricted area and that is not in storage.

RH-1309.
RH-1399. Reserved.

PART E.
WASTE DISPOSAL

RH-1400 General Requirements. A licensee shall dispose of licensed material only:

a. By transfer to an authorized recipient as provided in Section 2 of these Regulations; or

b. By decay in storage; or

c. By release in effluents within the limits in RH-1210; or

d. As authorized under RH-1402, RH-1403, RH-1404, or RH-1405.

e. A person must be specifically licensed to receive waste containing licensed material from other persons for:

1. Treatment prior to disposal;

2. Treatment or disposal by incineration; or

3. Decay in storage.

RH-1401 Method for Obtaining Approval of Proposed Disposal Procedures.

A licensee or applicant for a license may apply to the Department for approval of proposed procedures, not otherwise authorized in the Regulations in this Section, to dispose of licensed material generated in the licensee's activities. Each application shall include:

a. A description of the waste containing licensed material to be disposed of, including the physical and chemical properties important to risk evaluation, and the proposed manner and conditions of waste disposal;

b. An analysis and evaluation of pertinent information on the nature of the environment;

c. The nature and location of other potentially affected licensed and unlicensed facilities; and

d. Analyses and procedures to ensure that doses are maintained ALARA and within the dose limits in this Part.

RH-1402 Disposal by Release Into Sanitary Sewerage.

a. A licensee may discharge licensed material into sanitary sewerage if each of the following conditions is satisfied:

1. The material is readily soluble (or is readily dispersible biological material) in water;

2. The quantity of licensed or other radioactive material that the licensee releases into the sewer in one month divided by the average monthly volume of water released into the sewer by the licensee does not exceed the concentration listed in Table 3 of Appendix G to RH-1000 through RH-2101; and

3. If more than one radionuclide is released, the following conditions must also be satisfied:

i. The licensee shall determine the fraction of the limit in Table 3 of Appendix G to RH-1000 through RH-2101 represented by discharges into sanitary sewerage by dividing the actual monthly average concentration of each radionuclide released by the licensee into the sewer by the concentration of that radionuclide listed in Table 3 of Appendix G to RH-1000 through RH-2101; and

ii. The sum of the fractions for each radionuclide required by Paragraph a.3.i. of this Section does not exceed unity; and

4. The total quantity of licensed and other radioactive material that the licensee releases into the sanitary sewerage system in a year does not exceed five (5) curies (185 GBq) of Hydrogen-3, one (1) curie (37 GBq) of Carbon-14, and one (1) curie (37 GBq) of all other radioactive materials combined.

b. Excreta from individuals undergoing medical diagnosis or therapy with radioactive material is not subject to the limitations contained in Paragraph a of this Section.

RH-1403. Disposal by Burial in Soil.

No licensee shall dispose of radioactive material by burial in soil unless specific approval has been granted by the Department.

RH-1404. Treatment or Disposal by Incineration.

A licensee may treat or dispose of licensed material by incineration only in the amounts and forms specified in RH-1405 or as specifically approved by the Department pursuant to RH-1401.

RH-1405. Disposal of Specific Wastes.

a. Any licensee may dispose of the following licensed material without regard to its radioactivity:

1. 0.05 microcuries (1.85 kBq) or less of Hydrogen-3, Carbon-14 or Iodine-125 per gram of medium, used for liquid scintillation counting; and

2. 0.05 microcuries (1.85 kBq) or less of Hydrogen-3 Carbon-14 or Iodine-125 per gram of animal tissue, averaged over the weight of the entire animal.

b. A licensee may not dispose of tissue under RH-1405.b of this Section in a manner that would permit its use either as food for humans or as animal feed.

c. The licensee shall maintain records in accordance with RH-1500.h.

d. Nothing in this Section, however, relieves the licensee of maintaining records showing the receipt, transfer and disposal of such byproduct material as specified in RH-600; and

e. Nothing in this Section relieves the licensee from complying with other applicable federal, state and local regulation governing any other toxic or hazardous property of these materials.

RH-1406. Transfer for Disposal and Manifests.

(Appendix F and Appendix G to 10 CFR Part 20 referenced in this Part are available from the Department.)

a. The requirements of this Section and Appendix F and Appendix G to 10 CFR Part 20 are designed to:

i. Control transfers of low-level radioactive waste (LLW) by any waste generator, waste collector, or waste processor licensee, as defined in this Part, who ships low-level waste either directly, or indirectly through a waste collector or waste processor, to a licensed low-level waste land disposal facility as defined in Section 2 of these Regulations;

ii. Establish a manifest tracking system; and

RH-1406. (Cont'd)

iii. Supplement existing requirements concerning transfers and recordkeeping for those wastes.

b. Any licensee shipping radioactive waste intended for ultimate disposal at a licensed land disposal facility must document the information required on the U.S. Nuclear Regulatory Commission's Uniform Low-Level Radioactive Waste Manifest and transfer this recorded manifest information to the intended consignee in accordance with Appendix G to 10 CFR Part 20.

c. Each shipment manifest must include a certification by the waste generator as specified in Section II.

d. Each person involved in the transfer for disposal and disposal of waste, including the waste generator, waste collector, waste processor, and disposal facility operator, shall comply with the requirements specified in Section III of Appendix G to 10 CFR Part 20.

RH-1407. Compliance with Environmental and Health Protection Regulations.

Nothing in this Subpart relieves the licensee from complying with other applicable Federal, State, and local regulations governing any other toxic or hazardous properties of materials that may be disposed of under this Part E.

RH-1408.
RH-1499. Reserved.

PART F.
RECORDS, REPORTS, NOTIFICATIONS, AND TESTS

RH-1500. a. General provisions.

1. Each licensee or registrant shall use the units: curie, rad, rem, including multiples and subdivisions, and shall clearly indicate the units of all quantities on records required by this Part.

2. In the records required by this Part, the licensee may record quantities in International System of Units (SI) units in parentheses following each of the units specified in RH-1500.a.1. of this section. However, all quantities must be recorded as stated in RH-1500.a.1. of this section.

3. Not withstanding the requirements of RH-1500.a.1 of this Section, when recording information on shipment manifests, as required in RH-1406.b, information must be recorded in the International System of Units (SI) or; in SI and units as specified in RH-1500.a.1 of this Section.

4. The licensee or registrant shall make a clear distinction among the quantities entered on the records required by this Part (e.g., total effective dose equivalent, shallow-dose equivalent, eye dose equivalent, deep-dose equivalent, committed effective dose equivalent).

b. Records of radiation protection programs.

1. Each licensee or registrant shall maintain records of the radiation protection program, including:

   A. The provisions of the program; and

   B. Audits and other reviews of program content and implementation.

2. The licensee or registrant shall retain the records required by RH-1500.b.1.A of this Section until the Department terminates each pertinent license or registration requiring the record. The licensee or registrant shall retain the records required by RH-1500.b.1.B of this Section for three (3) years after the record is made.

c. Records of surveys.

1. Each licensee or registrant shall maintain records showing the results of surveys and calibrations required by RH-1300 and RH-1307. The licensee or registrant shall retain these records for three (3) years after the record is made.

2. The licensee or registrant shall retain each of the following records until the Department terminates each pertinent license or registration requiring the record:

A. Records of the results of surveys to determine the dose from external sources and used, in the absence of or in combination with individual monitoring data, in the assessment of individual dose equivalents;

B. Records of the results of measurements and calculations used to determine individual intakes of radioactive material and used in the assessment of internal dose;

C. Records showing the results of air sampling, surveys, and bioassays required pursuant to RH-1303.f.5.A.iii; and

D. Records of the results of measurements and calculations used to evaluate the release of radioactive effluents to the environment.

d. Determination of prior occupational dose.

1. For each individual who may enter the licensee's or registrant's restricted or controlled area and is likely to receive, in a year, an occupational dose requiring monitoring pursuant to RH-1302, the licensee shall:

A. Determine the occupational radiation dose received during the current year; and

B. Attempt to obtain the records of lifetime cumulative occupational radiation dose.

2. Prior to permitting an individual to participate in a planned special exposure, the licensee or registrant shall determine:

A. The internal and external doses from all previous planned special exposures; and

B. All doses in excess of the limits (including doses received during accidents and emergencies) received during the lifetime of the individual.

3. In complying with the requirements of RH-1500.d.1 of this Section, a licensee or registrant may:

A. Accept, as a record of the occupational dose that the individual received during the current year, a written signed statement from the individual, or from the individual's most recent employer for work involving radiation exposure, that discloses the nature and the amount of any occupational dose that the individual may have received during the current year;

B. Accept, as the record of lifetime cumulative radiation dose, an up-to-date Department Form Z, or equivalent, signed by the individual and counter-signed by an appropriate official of the most recent employer for work involving radiation exposure, or the individual's current employer (if the individual is not employed by the licensee); and

C. Obtain reports of the individual's dose equivalent(s) from the most recent employer for work involving radiation exposure, or the individual's current employer (if the individual is not employed by the licensee or registrant) by telephone, telegram, electronic media, or letter. The licensee or registrant shall request a written verification of the dose data if the authenticity of the transmitted report cannot be established.

4. The licensee or registrant shall record the exposure history, as required by RH-1500.d.1 of this Section, on Department Form Z, or other clear and legible record, of all the information required on that form.[6/] The form or record must show each period in which the individual received occupational exposure to radiation or radioactive material and must be signed by the individual who received the exposure. For each period for which the licensee or registrant obtains reports, the licensee or registrant shall use the dose shown in the report in preparing Department Form Z. For any period in which the licensee or registrant does not obtain a report, the licensee or registrant shall place a notation on Department Form Z indicating the periods of time for which data are not available.

5. If the licensee or registrant is unable to obtain a complete record of an individual's current and previously accumulated occupational dose, the licensee or registrant shall assume:

   A. In establishing administrative controls under RH-1200.f for the current year, that the allowable dose limit for the individual is reduced by 1.25 rems (12.5 mSv) for each quarter for which records were unavailable and the individual was engaged in activities that could have resulted in occupational radiation exposure; and

   B. That the individual is not available for planned special exposures.

6. The licensee or registrant shall retain the records on Department Form Z or equivalent until the Department terminates each pertinent license requiring this record. The licensee or registrant shall retain records used in preparing Department Form Z for three (3) years after the record is made.

e. Records of planned special exposures.

1. For each use of the provisions of RH-1205 for planned special exposures, the licensee shall maintain records that describe:

   A. The exceptional circumstances requiring the use of a planned special exposure;

   B. The name of the management official who authorized the planned special exposure and a copy of the signed authorization;

   C. What actions were necessary;

   D. Why the actions were necessary;

   E. How doses were maintained ALARA; and

   F. What individual and collective doses were expected to result, and the doses actually received in the planned special exposure.

2. The licensee shall retain the records until the Department terminates each pertinent license requiring these records.

f. Records of individual monitoring results.

1. Recordkeeping requirement. Each licensee or registrant shall maintain records of doses received by all individuals for whom monitoring was required pursuant to RH-1302, and records of doses received during planned special exposures, accidents, and emergency conditions. These records[7/] must include, when applicable:

   A. The deep-dose equivalent to the whole body, eye dose equivalent, shallow-dose equivalent to the skin, and shallow-dose equivalent to the extremities;

   B. The estimated intake of radionuclides (See RH-1201);

   C. The committed effective dose equivalent assigned to the intake or body burden of radionuclides;

   D. The specific information used to calculate the committed effective dose equivalent pursuant to RH-1203.c;

   E. The total effective dose equivalent when required by RH-1202; and

   F. The total of the deep-dose equivalent and the committed dose to the organ receiving the highest total dose.

2. Recordkeeping frequency. The licensee or registrant shall make entries of the records specified in RH-1500.f.1 of this Section at least annually.

3. Recordkeeping format. The licensee or registrant shall maintain the records specified in RH-1500.f.1 of this Section on Department Form Y, in accordance with the instructions for Department Form Y, or in clear and legible records containing all the information required by that form.

4. Privacy protection. The records required under this Section should be protected from public disclosure because of their personal privacy nature.

5. The licensee or registrant shall maintain the records of dose to an embryo/fetus with the records of dose to the declared pregnant woman. The declaration of pregnancy shall also be kept on file, but may be maintained separately from the dose records.

6. The licensee or registrant shall retain each required form or record until the Department terminates each pertinent license or registration requiring the record.

g. Records of dose to individual members of the public.

1. Each licensee or registrant shall maintain records sufficient to demonstrate compliance with the dose limit for individual members of the public (See RH-1208).

2. The licensee or registrant shall retain the records required by RH-1500.g.1 of this Section until the Department terminates each pertinent license or registration requiring the record.

h. Records of waste disposal.

1. Each licensee or registrant shall maintain records of the disposal of licensed materials made under RH-1401, RH-1402, RH-1403, RH-1404, RH-1405, and disposal by burial in soil, including burials authorized before January 28, 1981.[8/]

2. The licensee or registrant shall retain the records required by RH-1500.h.1 of this Section until the Department terminates each pertinent license requiring the record.

i. Records of testing entry control devices for very high radiation areas.

1. Each licensee or registrant shall maintain records of tests made under RH-1303.e.1.I on entry control devices for very high radiation areas. These records must include the date, time, and results of each such test of function.

2. The licensee or registrant shall retain the records required by RH-1500.i.1 of this Section for three years after the record is made.

RH-1500. (Cont'd)

j. Form of records. Each record required by this Part must be legible throughout the specified retention period. The record may be the original or a reproduced copy or a microform provided that the copy or microform is authenticated by authorized personnel and that the microform is capable of producing a clear copy throughout the required retention period. The record may also be stored in electronic media with the capability for producing legible, accurate, and complete records during the required retention period. Records, such as letters, drawings, and specifications, must include all pertinent information, such as stamps, initials, and signatures. The licensee or registrant shall maintain adequate safeguards against tampering with and loss of records.

RH-1501. Reports of Theft or Loss of Sources of Radiation.

Each licensee or registrant shall report promptly by telephone and confirm promptly by letter to the Division of Radiation Control and Emergency Management, Arkansas Department of Health, 4815 West Markham, Mail Slot 30, Little Rock, Arkansas 72205-3867, the theft or loss as soon as such theft or loss becomes known to the licensee or registrant of:

a. Any radiation machine; or

b. Any quantity of radioactive material in excess of a quantity generally licensed under RH-900, Schedule A or RH-901, Schedule B, in Section 2 of these Regulations.

c. Telephone reports.

1. Each licensee shall report by telephone as follows:

A. Immediately after its occurrence becomes known to the licensee, any lost, stolen, or missing licensed material in an aggregate quantity equal to or greater than 1,000 times the quantity specified in Appendix G to RH-1000 through RH-2110 under such circumstances that it appears to the licensee that an exposure could result to persons in unrestricted areas; or

B. Within 30 days after the occurrence of any lost, stolen, or missing licensed material becomes known to the licensee, all licensed material in a quantity greater than ten (10) times the quantity specified in Appendix G to RH-1000 through RH-2110 that is still missing at this time.

2. Reports must be made as follows:

All licensees or registrants shall make reports to the Department at 1-800-633-1735.

d. Written reports.

1. Each licensee required to make a report under RH-1501 of this Section shall, within thirty (30) days after making the telephone report, make a written report setting forth the following information:

A. A description of the licensed material involved, including kind, quantity, and chemical and physical form;

B. A description of the circumstances under which the loss or theft occurred;

C. A statement of disposition, or probable disposition, of the licensed material involved;

D. Exposures of individuals to radiation, circumstances under which the exposures occurred, and the possible total effective dose equivalent to persons in unrestricted areas;

E. Actions that have been taken, or will be taken, to recover the material; and

F. Procedures or measures that have been, or will be, adopted to ensure against a recurrence of the loss or theft of licensed material.

2. Reports must be made as follows:

A. All licensees or registrants shall make reports to the Director of the Division of Radiation Control and Emergency Management, Arkansas Department of Health, 4815 West Markham, Mail Slot 30, Little Rock, Arkansas 72205-3867.

B. Subsequent to filing the written report, the licensee or registrant shall also report any additional substantive information on the loss or theft within thirty (30) days after the licensee or registrant learns of such information.

C. The licensee or registrant shall prepare any report filed with the Department pursuant to this Section so that names of individuals who may have received exposure to radiation are stated in a separate and detachable part of the report.

RH-1502. Notification of Incidents.

a. Immediate notification. Each licensee or registrant shall immediately notify the Division of Radiation Control and Emergency Management, Arkansas Department of Health, 4815 West Markham, Mail Slot 30, Little Rock, Arkansas 72205-3867, by telephone and confirming letter of any incident involving any source of radiation possessed by the licensee or registrant and which may have caused or threatens to cause:

1. An individual to receive:

A. A total effective dose equivalent of 25 rems (0.25 Sv) or more; or

B. A lens dose equivalent of 75 rems (0.75 Sv) or more; or

C. A shallow-dose equivalent to the skin or extremities of 250 rads (2.5 Gy) or more; or

2. The release of radioactive material, inside or outside of a restricted area, so that, had an individual been present for twenty-four (24) hours, the individual could have received an intake five (5) times the occupational annual limit on intake (The provisions of this Paragraph do not apply to locations where personnel are not normally stationed during routine operations, such as hot-cells or process enclosures.).

b. Twenty-four hour notification. Each licensee or registrant shall within twenty-four (24) hours notify the Division of Radiation Control and Emergency Management, Arkansas Department of Health, 4815 West Markham, Mail Slot 30, Little Rock, Arkansas 72205-3867, by telephone and confirming letter of any incident involving any source of radiation possessed by the licensee or registrant and which may have caused or threatens to cause:

1. An individual to receive, in a period of twenty-four (24) hours:

A. A total effective dose equivalent exceeding five (5) rems(0.05 Sv); or

B. A lens dose equivalent exceeding fifteen (15) rems (0.15 Sv); or

C. A shallow-dose equivalent to the skin or extremities exceeding fifty (50) rems (0.5 Sv); or

2. The release of radioactive material, inside or outside of a restricted area, so that, had an individual been present for twenty-four (24) hours, the individual could have received an intake in excess of one occupational annual limit on intake (The provisions of this Paragraph do not apply to locations where personnel are not normally stationed during routine operations, such as hot-cells or process enclosures).

c. The licensee or registrant shall prepare any report filed with the Department pursuant to this Section so that names of individuals who have received exposure to radiation or radioactive material are stated in a separate and detachable part of the report.

d. The provisions of this Section do not include doses that result from planned special exposures, that are within the limits for planned special exposures, and that are reported under RH-1504.

e. Immediate report. Each licensee or registrant shall notify the Department as soon as possible but not later than four (4) hours after the discovery of an event that prevents immediate protective actions necessary to avoid exposures to radiation or radioactive materials that could exceed regulatory limits or releases of licensed material that could exceed regulatory limits (events may include fires, explosions, toxic gas releases, et cetera).

f. Twenty-four hour report. Each licensee or registrant shall notify the Department within twenty-four (24) hours after the discovery of any of the following events involving licensed material:

1. An unplanned contamination event that:

A. Requires access to the contamination area, by workers or the public, to be restricted for more than twenty-four (24) hours by imposing additional radiological controls or by prohibiting entry into the area;

B. Involves a quantity of material greater than five (5) times the lowest annual limit on intake specified in Appendix G to RH-1000 through RH-2110 for the material; and

C. Has access to the area restricted for a reason other than to allow isotopes with a half-life of less than twenty-four (24) hours to decay prior to decontamination.

2. An event in which equipment is disabled or fails to function as designed when:

   A. The equipment is required by regulation or licensee condition to prevent releases exceeding regulatory limits, to prevent exposures to radiation and radioactive materials exceeding regulatory limits, or to mitigate the consequences of an accident;

   B. The equipment is required to be available and operable when it is disabled or fails to function; and

   C. No redundant equipment is available and operable to perform the required safety function.

3. An event that requires unplanned medical treatment at a medical facility of an individual with spreadable radioactive contamination on the individual's clothing or body.

4. An unplanned fire or explosion damaging any licensed material or any device, container, or equipment containing licensed material when:

   A. The quantity of material involved is greater than five (5) times the lowest annual limit on intake specified in Appendix G of RH-1000 through RH-2110 of these Regulations for the material; and

   B. The damage affects the integrity of the licensed material or its container.

g. Preparation and submission of reports. Reports made by licensees or registrants in response to the requirements of this Section must be made as follows:

1. Licensees or registrants shall make reports required by RH-1502.a and RH-1502.b by telephone to the Department at 1-800-633-1735. To the extent that the information is available at the time of notification, the information provided in these reports must include:

   A. The caller's name and call back telephone number;

   B. A description of the event, including date and time;

   C. The exact location of the event;

D. The isotopes, quantities, and chemical and physical form of the licensed material involved; and

E. Any personnel radiation exposure data available.

2. Written report. Each licensee or registrant who makes a report required by RH-1502.a and RH-1502.b of this Section shall submit a written follow-up report within 30 (thirty) days of the initial report. Written reports prepared pursuant to other regulations may be submitted to fulfill this requirement if the reports contain all of the necessary information and the appropriate distribution is made. These written reports must be sent to the Division of Radiation Control and Emergency Management; Arkansas Department of Health; 4815 West Markham Street, Mail Slot # 30; Little Rock, Arkansas 72205-3867. The reports must include the following:

A. A description of the event, including the probable cause and the manufacturer and model number (if applicable) of any equipment that failed or malfunctioned;

B. The exact location of the event;

C. The isotopes, quantities and chemical and physical form of the licensed material involved;

D. Date and time of the event;

E. Corrective actions taken or planned and the results of any evaluations or assessments; and

F. The extent of exposure of individuals to radiation or to radioactive materials without identification of individuals by name.

RH-1503. Tests. Each licensee and registrant shall perform upon instructions from the Department or shall permit the Agency to perform, such reasonable tests as the Department deems appropriate or necessary including, but not limited to, tests of:

a. Sources of radiation;

b. Facilities wherein sources of radiation are used or stored;

c. Radiation detection and monitoring instruments; and

RH-1502. (Cont'd)

d. Other equipment and devices used in connection with utilization or storage of licensed or registered sources of radiation.

RH-1504. Reports of Exposures, Radiation Levels, and Concentrations of Radioactive Material Exceeding the Limits.

a. Reportable events. In addition to the notification required by RH-1502, each licensee or registrant shall submit a written report within thirty (30) days after learning of any of the following occurrences:

1. Any incident for which notification is required by RH-1502; or

2. Doses in excess of any of the following:

A. The occupational dose limits for adults in RH-1200; or

B. The occupational dose limits for a minor in RH-1206; or

C. The limits for an embryo/fetus of a declared pregnant woman in RH-1207; or

D. The limits for an individual member of the public in RH-1208; or

E. Any applicable limit in the license; or

F. The ALARA constraints for air emissions established under RH-1004.d.

3. Levels of radiation or concentrations of radioactive material in:

A. A restricted area in excess of any applicable limit in the license; or

B. An unrestricted area in excess of ten (10) times any applicable limit set forth in this Part or in the license (whether or not involving exposure of any individual in excess of the limits in RH-1208); or

4. For licensees subject to the provisions of EPA's generally applicable environmental radiation standards levels of radiation or releases of radioactive material in excess of those standards, or of license conditions related to those standards.

RH-1504. (Cont'd)

b. Contents of reports.

1. Each report required by RH-1504.a of this Section must describe the extent of exposure of individuals to radiation and radioactive material, including, as appropriate:

A. Estimates of each individual's dose;

B. The levels of radiation and concentrations of radioactive material involved;

C. The cause of the elevated exposures, dose rates, or concentrations; and

D. Corrective steps taken or planned to ensure against a recurrence, including the schedule for achieving conformance with applicable limits, ALARA constraints, generally applicable environmental standards, and associated license conditions.

2. Each report filed pursuant to RH-1504.a of this Section must include for each occupationally overexposed[9/] individual: the name, Social Security account number, and date of birth. The report must be prepared so that this information is stated in a separate and detachable part of the report.

3. The licensee or registrant shall prepare any report filed with the Department pursuant to this Section so that names of individuals who may have received exposure to radiation are stated in a separate and detachable part of the report.

RH-1505. Notifications and Reports to Individuals.

a. Requirements for notification and reports to individuals of exposure to radiation or radioactive material are specified in Part N of this Section.

b. Reports to individuals of exceeding dose limits. When a licensee or registrant is required, pursuant to the provisions of RH-1504, RH-1505.b, or RH-1509, to report to the Department any exposure of an identified occupationally exposed individual, or an identified member of the public, to radiation or radioactive material, licensee or registrant shall also provide a copy of the report submitted to the Department to the individual. The report must be transmitted at a time no later than the transmittal to the Department.

RH-1506. Vacating Premises.

Each specific licensee shall, no less than thirty (30) days before vacating or relinquishing possession or control of premises which may have been contaminated with radioactive material as a result of the activities, notify the Department in writing of intent to vacate. When deemed necessary by the Department, the licensee shall decontaminate the premises in such a manner as the Department may specify.

RH-1507. Records and Reports of Misadministrations.

a. For a misadministration:

1. The licensee or registrant shall notify the Department by telephone no later than the next calendar day after the discovery of the misadministration.

2. The licensee or registrant shall submit a written report to the Department within fifteen (15) days after the discovery of the misadministration. The written report must include the licensee's or registrant's name; the prescribing physician's name; a brief description of the event; why the event occurred; the effect on the individual who received the misadministration; what improvements are needed to prevent recurrence; actions take to prevent recurrence; whether the licensee or registrant notified the individual (or the individual's responsible relative or guardian), and if not, why not; and, if there was notification, what information was provided. The report must not include the individual's name or any other information that could lead to identification of the individual. To meet the requirements of this section, the notification of the individual receiving the misadministration may be made instead to that individual's responsible relative or guardian when appropriate.

3. The licensee or registrant shall notify the referring physician and also notify the individual receiving the misadministration no later than twenty-four (24) hours after its discovery, unless the referring physician personally informs the licensee or registrant either that he/she will inform the individual or that, based on medical judgment, telling the individual would be harmful. The licensee or registrant is not required to notify the individual without first consulting the referring physician. If the referring physician or the individual receiving the misadministration cannot be reached within twenty-four (24) hours, the licensee or registrant shall notify the individual as soon as possible thereafter. The licensee or registrant may not delay any appropriate medical care

RH-1507. (Cont'd)

for the individual, including any necessary remedial care as a result of the misadministration, because of any delay in notification.

4. If the individual was notified, the licensee or registrant shall also furnish, within fifteen (15) days after discovery of the misadministration, a written report to the individual by sending either:

A. A copy of the report that was submitted to the Department; or

B. A brief description of both the event and the consequences as they may affect the patient, provided a statement is included that the report submitted to the Department can be obtained from the licensee or registrant.

b. Each licensee or registrant shall retain a record of each misadministration for five (5) years. The record must contain the names of all individuals involved (including the prescribing physician, allied health personnel, the individual who received the misadministration, and the individual's referring physician, if applicable), the individual's social security number or other identification number if one has been assigned, a brief description of the misadministration, why it occurred, the effect on the individual, what improvements are needed to prevent recurrence, and the actions taken to prevent recurrence.

c. Aside from the notification requirement, nothing in this Section affects any rights or duties of licensees or registrants and physicians in relation to each other, to individuals receiving misadministrations, or that individual's responsible relatives or guardians.

RH-1508. Deleted.

RH-1509. Reports of Individual Monitoring.

a. This Section applies to each person licensed by the Department to:

1. Possess or use radioactive material for purposes of radiography pursuant to Part I of these Regulations; or

2. Possess or use at any time, for processing or manufacturing for distribution pursuant to Section 2 of these Regulations, radioactive material in quantities exceeding any one of the following quantities.

TABLE RH-1509.a.2.

Radionuclide	Quantity of Radionuclide[a] in Curies
Cesium-137	1
Cobalt-60	1
Gold-198	100
Iodine-131	1
Iridium-192	10
Krypton-85	1,000
Promethium-147	10
Technetium-99m	1,000

[a] The Department may require as a license condition, or by rule, Regulation, or order pursuant to RH-2002, reports from licensees who are licensed to use radionuclides not on this list, in quantities sufficient to cause comparable radiation levels.

b. Each licensee in a category listed in RH-1509.a shall complete an annual report of the results of individual monitoring carried out by the licensee for each individual for whom monitoring was required by RH-1302 during that year. The licensee may include additional data for individuals for whom monitoring was provided but not required. The licensee shall use Department Form Y or electronic media containing all the information required by Department Form Y.

c. The licensee shall complete the report required by RH-1509.b, covering the preceding year, on or before May 31 of each year. The licensee shall retain the report and submit it if requested to the Director, Division of Radiation Control and Emergency Management, Arkansas Department of Health, 4815 West Markham, Mail Slot 30, Little Rock, Arkansas 72205-3867.

RH-1510. Quality Management Program

a. Each applicant or licensee under this Part, as applicable, shall establish and maintain a written quality management program to provide high confidence that radioactive material or radiation from byproduct material will be administered as directed by the authorized user. The quality management program must include written policies and procedures to meet the following specific objectives:

1. That, prior to administration, a written directive[10/] is prepared for:

A. Any teletherapy radiation dose;

B. Any gamma stereotactic radiosurgery radiation dose;

C. Any brachytherapy radiation dose;

D. Any administration of quantities greater than 30 microcuries of either Sodium Iodine I-125 or I-131;

E. Any therapeutic administration of a radiopharmaceutical, other than sodium iodide I-125 or I-131; and

F. Any medical particle accelerators dose.

2. That, prior to each administration, the patient's or human research subject's identity is verified by more than one method as the individual named in the written directive;

3. That final plans of treatment and related calculations for brachytherapy, teletherapy, particle accelerator therapy, and gamma stereotactic radiosurgery are in accordance with the respective written directives;

4. That each administration is in accordance with the written directive; and

5. That any unintended deviation from the written directive is identified and evaluated, and appropriate action is taken.

b. The licensee shall:

1. Develop procedures for and conduct a review of the quality management program including, since the last review, an evaluation of:

A. A representative sample of patient and human research subject administrations;

B. All recordable events; and

C. All misadministrations to verify compliance with all aspects of the quality management program. These reviews shall be conducted at intervals no greater than 12 (twelve) months;

2. Evaluate each of these reviews to determine the effectiveness of the quality management program, and if required, make modifications to meet the objectives of RH-1510.a; and

3. Retain records of each review, including the evaluations and findings of the review, in an auditable form for three (3) years.

c. The licensee shall evaluate and respond, within 30 days after discovery of the recordable event by:

1. Assembling the relevant facts including the cause;

2. Identifying what, if any, corrective action is required to prevent recurrence; and

3. Retaining a record, in an auditable form, for three (3) years, of the relevant facts and what corrective action, if any, was taken.

d. The licensee shall retain:

1. Each written directive; and

2. A record of each administered radiation dose or radiopharmaceutical dosage where a written directive is required in RH-1510.a.1 above, in an auditable form, for three (3) years after the date of administration.

e. The licensee may make modifications to the quality management program to increase the program's efficiency provided the programs effectiveness is not decreased. The licensee shall furnish the modification to the Department within 30 days after the modification has been made.

f. 1. Each applicant for a new license, as applicable, shall submit to the Department in accordance with RH-1510 a quality management program as part of the application for a license and implement the program upon issuance of the license by the Department.

RH-1510. (Cont'd)

2. Each existing licensee as applicable, shall submit to the Department, in accordance with RH-1510, by January 1, 1994 a written certification that the quality management program has been implemented along with a copy of the program.

RH-1511. Deliberate Misconduct

a. Any licensee, registrant, certificate of registration holder, applicant for a license or certificate of registration, employee of a licensee or registrant, certificate of registration holder or applicant; or any contractor (including a supplier or consultant), subcontractor, employee of a contractor or subcontractor, of any licensee, registrant or certificate of registration holder or applicant for a license, registration, or certificate of registration, who knowingly provides to any licensee, registrant, applicant, certificate holder, contractor or subcontractor, any components, equipment, materials or other goods or services that relate to a licensee's, registrant's , certificate holder's or applicant's activities subject to this Part may not:

1. Engage in deliberate misconduct that causes or would have caused, if not detected, a licensee, registrant, certificate of registration holder, or applicant to be in violation of any rule, regulation, or order; or any term, condition, or limitation of any license, issued by the Department; or

2. Deliberately submit to the Department, a licensee, registrant, certificate of registration holder, an applicant, or a licensee's or registrant's contractor or subcontractor, information that the person submitting the information knows to be incomplete or inaccurate in some respect material to the Department.

b. A person who violates RH-1511.a.1 or 2 of this Section may be subject to enforcement action in accordance with the procedures in RH-2110.

c. For purposes of RH-1511.a.1, deliberate misconduct by a person means an intentional act or omission that the person knows:

1. Would cause a licensee, registrant, certificate of registration holder, or applicant to be in violation of any rule, regulation, or order; or any term, condition, or limitation, of any license issued by the Department; or

2. Constitutes a violation of a requirement, procedure, instruction, contract, purchase order or policy of a licensee, registrant, certificate of registration holder, applicant, contractor, or subcontractor.

RH-1512 "Records Required at Temporary Jobsites"

a. Each licensee or registrant conducting activities as defined in RH-1100.df. shall have the following records available at the temporary jobsite for inspection by the Department:

1. Current copy of appropriate license issued by the Department, the U.S. Nuclear Regulatory Commission, or an Agreement State.

2. A copy of these regulations.

3. Operating and Emergency Procedures.

4. The latest instrument calibration, if applicable.

5. Survey records required pursuant to RH-1803.c. for the period of operation at the jobsite, if applicable.

6. The latest leak test record for the device(s) in use at the jobsite.

7. Daily pocket dosimeter record for the period of operation at the jobsite, if applicable.

RH-1513.-
RH-1599. Reserved

PART G.
SPECIAL REQUIREMENTS FOR THE USE OF X-RAYS IN THE HEALING ARTS

RH-1600. Scope.

This Part establishes requirements, for which a registrant (or licensee) is responsible, for use of x-ray equipment by or under the supervision of an individual authorized by and licensed in accordance with state statutes to engage in the healing arts or veterinary medicine. The provisions of this Part are in addition to and not in substitution for, other applicable provisions of these Regulations.

RH-1601. Definitions as Used in these Regulations. Additional definitions used only in a certain Part will be found in that Part.

a. Accessible surface - The external surface of the enclosure or housing provided by the manufacturer.

b. Added filtration - Any filtration which is in addition to the inherent filtration

c. Aluminum equivalent - The thickness of type 1100 aluminum alloy[11/] affording the same attenuation, under specified conditions, as the material in question.

d. Assembler - Any person engaged in the business of assembling, replacing or installing one or more components into an x-ray system or subsystem.

e. Attenuation block - A block or stack, having dimensions 20 centimeters by 20 centimeters by 3.8 centimeters, of type 1100 aluminum alloy[11/] or other materials having equivalent attenuation.

f. Automatic exposure control - A device which automatically controls one or more technique factors in order to obtain at a pre-selected location(s) a required quantity of radiation (See also "Phototimer").

g. Barrier - See "Protective barrier".

h. Beam axis - A line from the source through the centers of the x-ray fields.

i. Beam-limiting device - A device which provides a means to restrict the dimensions of the x-ray field.

j. Beam monitoring system - A system designed to detect and measure the radiation present in the useful beam.

RH-1601. (Cont'd)

k. Calibration - The determination of (1) the response or reading of an instrument relative to a series of known radiation values over the range of the instrument or (2) the strength of a source of radiation relative to a standard.

l. Cephalometric device - A device intended for the radiographic visualization and measurement of the dimensions of the human head.

m. Certified components - Components of x-ray systems which are subject to regulations promulgated under Public Law 90-602, the Radiation Control for Health and Safety Act of 1968.

n. Certified system - Any x-ray system which has one or more certified component(s).

o. Changeable filters - Any filter, exclusive of inherent filtration, which can be removed from the useful beam through any electronic, mechanical or physical process.

p. Coefficient of variation or "C" - The ratio of the standard deviation to the mean value of a population of observations. It is estimated using the following equation:

$$C = \frac{S}{\bar{x}} = \frac{1}{\bar{x}} \left[\sum_{i=1}^{n} \frac{(x_i - x)^2}{n - 1} \right]^{1/2}$$

where:

s = Estimated standard deviation of the population.

X = Mean value of observations in sample.

X_i = i^{th} observation in sample.

n = Number of observations in sample.

q. Contact therapy system - An x-ray system used for therapy with the x-ray tube port placed in contact with or within 5 centimeters of the surface being treated.

r. Control panel - That part of the x-ray control upon which are mounted the switches, knobs, push buttons, and other hardware necessary for manually setting the technique factors.

s. Cooling curve - The graphical relationship between heat units stored and cooling time.

RH-1601. (Cont'd)

t. Dead-man switch - A switch constructed that a circuit closing contact can be maintained only by continuous pressure on the switch by the operator.

u. Detector - See "Radiation detector".

v. Diagnostic source assembly - The tube housing assembly with a beam-limiting device attached.

w. Diagnostic x-ray system - An x-ray system designed for irradiation of any part of the human body for the purpose of diagnosis or visualization.

x. Direct scattered radiation - The scattered radiation which has been deviated in direction only by materials irradiated by the useful beam (See "Scattered radiation").

y. Entrance exposure - The roentgens per unit time at the point where the center of the useful beam enters the patient.

z. Equipment - See "X-ray equipment".

aa. Exposure - The quotient of dQ by dm where dQ is the absolute value of the total charge of the ions of one sign produced in air when all the electrons (negatrons and positrons) liberated by photons in a volume element of air having mass dm are completely stopped in air. (The special unit of exposure is the roentgen [R]).

ab. Field emission equipment - Equipment which uses an x-ray tube in which electron emission from the cathode is due solely to the action of an electric field.

ac. Filter - Material placed in the useful beam to absorb preferentially selected radiations.

ad. Fluoroscopic imaging assembly - A subsystem in which x-ray photons produce a fluoroscopic image. It includes the image receptor(s) such as the image intensifier and spot-film device, electrical interlocks, if any and structural material providing linkage between the image receptor and diagnostic source assembly.

ae. Focal spot - The area projected on the anode of the x-ray tube by the electrons accelerated from the cathode and from which the useful beam originates.

af. Full beam detector - A radiation detector of such size that the total cross section of the maximum size useful beam is intercepted.

ag. General purpose radiographic x-ray system - Any radiographic x-ray system which, by design, is not limited to radiographic examination of specific anatomical regions.

RH-1601. (Cont'd)

ah. Gonad shield - A protective barrier for the testes or ovaries.

ai. Half-value layer - The thickness of specified material which attenuates the beam of radiation to an extent such that the exposure rate is reduced to one-half of its original value. In this definition, the contribution of all scattered radiation, other than any which might be present initially in the beam concerned, is deemed to be excluded.

aj. Healing arts screening - The testing of human beings using x-ray machines for the detection or evaluation of health indications when such tests are not specifically and individually ordered by a licensed practitioner of the healing arts legally authorized to prescribe such x-ray tests for the purpose of diagnosis or treatment.

ak. Heat unit - A unit of energy equal to the product of the peak kilovoltage, milliampers and seconds, i.e., kVp x mA x second.

al. HVL - See "Half-value layer".

am. Image intensifier - A device, installed in its housing, which instantaneously converts an x-ray pattern into a corresponding light image of higher energy density.

an. Image receptor - Any device, such as a fluorescent screen or radiographic film, which transforms incident x-ray photons either into a visible image or into another form which can be made into a visible image by further transformations.

ao. Image receptor support - For mammographic systems, that part of the system designed to support the image receptor in a horizontal plane during a mammographic examination.

ap. Inherent filtration - The filtration of the useful beam provided by the permanently installed components of the tube housing assembly.

aq. Interlock - A device arranged or connected such that the occurrence of an event or condition is required before a second event or condition can occur or continue to occur.

ar. Irradiation - The exposure of matter to ionizing radiation.

as. Kilovolts peak - See "Peak tube potential".

at. kV - Kilovolts.

au. kVp - See "Peak tube potential".

av. kWs - Kilowatt second. It is equivalent to 10^3 kV.mA.sec, i.e.,

$$(A)kWs = (X)kV \times (Y)mA \times (Z)sec \times \frac{kWs}{10^3 kV \times mA \times s} = \frac{XYZ\ kWs}{10^3}$$

aw. Lead equivalent - The thickness of lead affording the same attenuation, under specified conditions, as the material in question.

ax. Leakage radiation - Radiation emanating from the diagnostic or therapeutic source assembly except for:

1. the useful beam, and

2. radiation produced when the exposure switch or timer is not activated.

ay. Leakage technique factors - The technique factors associated with the tube housing assembly which are used in measuring leakage radiation. They are defined as follows:

1. For capacitor energy storage equipment, the maximum-rated peak tube potential and the maximum-rated number of exposures in an hour for operation at the maximum-rated peak tube potential with the quantity of charge per exposure being 10 millicoulombs, i.e., 10 milliampere seconds or the minimum obtainable from the unit, whichever is larger.

2. For field emission equipment rated for pulsed operation, the maximum-rated peak tube potential and the maximum-rated number of x-ray pulses in an hour for operation at the maximum-rated peak tube potential.

3. For all other equipment, the maximum-rated peak tube potential and the maximum-rated continuous tube current for the maximum-rated peak tube potential.

az. Light field - That area of the intersection of the light beam from the beam-limiting device and one of the set of planes parallel to and including the plane of the image receptor, whose perimeter is the locus of points at which the illumination is one-fourth of the maximum in the intersection.

ba. Line-voltage regulation - The difference between the no-load and the load line potentials expressed as a percentage of the load line potential. It is calculated using the following equation:

Percent line-voltage regulation - $100(V_n-V_1)/V_1$

where

V_n = No-load line potential and
V_1 = Load line potential.

bb. mA - Milliampere.

bc. mAs - Milliampere second.

RH-1601. (Cont'd)

bd. Maximum line current - The root-mean-square current in the supply line of an x-ray machine operating at its maximum rating.

be. Mobile equipment - See "X-ray equipment".

bf. Patient - An individual subjected to healing arts examination, diagnosis or treatment.

bg. Peak tube potential - The maximum value of the potential difference across the x-ray tube during an exposure.

bh. Phantom - A volume of material behaving in a manner similar to tissue with respect to the attenuation and scattering of radiation.

bi. Phototimer - A method for controlling radiation exposures to image receptors by the amount of radiation which reaches a radiation monitoring device(s). The radiation monitoring device(s) is part of an electronic circuit which controls the duration of time the tube is activated (See "Automatic exposure control").

bj. PID - See "Position indicating device".

bk. Position indicating device - A device on dental x-ray equipment used to indicate the beam position and to establish a definite source-surface (skin) distance. It may or may not incorporate or serve as a beam-limiting device.

bl. Primary dose monitoring system - A system which will monitor the useful beam during irradiation and which will terminate irradiation when pre-selected number of dose monitor units have been acquired.

bm. Primary protective barrier - See "Protective barrier".

bn. Protective apron - An apron made of radiation attenuating materials used to reduce radiation exposure.

bo. Protective barrier - A barrier of radiation attenuating material(s) used to reduce radiation exposure. The types of protective barriers are as follows:

1. Primary protective barrier - The material, excluding filters, placed in the useful beam, for protection purposes, to reduce the radiation exposure.

2. Secondary protective barrier - A barrier sufficient to attenuate the stray radiation to the required degree.

bp. Protective glove - A glove made of radiation attenuating materials used to reduce radiation exposure.

bq. Qualified expert - An individual who has demonstrated to the satisfaction of the Department that such individual possesses the knowledge and training to measure ionizing radiation, to evaluate safety techniques and to advise regarding radiation protection needs.

br. Radiation detector - A device which in the presence of radiation provides by either direct or indirect means, a signal or other indication suitable for use in measuring one or more quantities of incident radiation.

bs. Radiation therapy simulation system - A radiographic or fluoroscopic x-ray system intended for localizing the volume to be exposed during radiation therapy and confirming the position and size of the therapeutic irradiation field.

bt. Radiograph - An image receptor on which the image is created directly or indirectly by an x-ray pattern and results in a permanent record.

bu. Radiograph imaging system - Any system whereby a permanent or semi-permanent image is recorded on an image receptor by the action of ionizing radiation.

bv. Rating - The operating limits as specified by the component manufacturer.

bw. Recording - Producing a permanent form of an image resulting from x-ray photons (e.g., film, video tape).

bx. Response time - The time required for an instrument system to reach 90 percent of its final reading when the radiation-sensitive volume of the instrument system is exposed to a step change in radiation flux from zero sufficient to provide a steady state mid scale reading.

by. Scattered radiation - Radiation that, during passage through matter, has been deviated in direction (See "Direct scattered radiation").

bz. Secondary dose monitoring system - A system which will terminate irradiation in the event of failure of the primary system.

ca. Secondary protective barrier - See "Protective barrier".

cb. Shutter - A device attached to the tube housing assembly which can totally intercept the useful beam and which as a lead equivalency not less than that of the tube housing assembly.

cc. SID - See "Source-image receptor distance".

cd. Source - The focal spot of the x-ray tube.

RH-1601. (Cont'd)

ce. Source-image receptor distance - The distance from the source to the center of the input surface of the image receptor.

cf. Spot check - A procedure which is performed to assure that a previous calibration continues to be valid.

cg. Spot film - A radiograph which is made during a fluoroscopic examination to permanently record conditions which exist during that fluoroscopic procedure.

ch. Spot-film device - A device intended to transport and/or position a radiographic image receptor between the x-ray source and fluoroscopic image receptor. It includes a device intended to hold a cassette over the input end of an image intensifier for the purpose of making a radiograph.

ci. SSD - The distance between the source and the skin of the patient.

cj. Stationary equipment - See "X-ray equipment".

ck. Stray radiation - The sum of leakage and scattered radiation.

cl. Technique factors - The conditions of operation. They are specified as follows:

1. For capacitor energy storage equipment, peak tube potential in kV and quantity of charge in mAs.

2. For field emission equipment rated for pulsed operation, peak tube potential in kV and number of x-ray pulses.

3. For all other equipment, peak tube potential in kV and either tube current in mA and exposure time in seconds or the product of tube current and exposure time in mAs.

cm. Termination of irradiation - The stopping of irradiation in a fashion which will not permit continuance of irradiation without the resetting of operating conditions at the control panel.

cn. Traceable to a national standard - A quantity or a measurement that has been compared to a NIST* (National Institute of Standards and Technology) standard directly or indirectly through one or more intermediate steps and that all comparisons have been documented.

***formerly NBS (National Bureau of Standards)**

co. Therapeutic-type housing -

1. For x-ray therapy equipment not capable of operating at 500 kVp or above, the following definition applies: An x-ray tube housing so constructed that the leakage radiation averaged over any 100 cm^2 area at a distance of one meter from the source does not exceed one roentgen in an hour when the tube is operated at its maximum rated continuous current for the maximum rated tube potential.

2. For x-ray therapy equipment capable of operation at 500 kVp or above, the following definition applies: An x-ray tube housing so constructed that leakage radiation averaged over any 100 cm^2 area at a distance of one meter from the source does not exceed 0.1 percent of the useful beam dose rate at one meter from the source for any of its operating conditions.

cp. Therapeutic x-ray and/or electron system - A system designed for irradiation of any part of the human body for the purpose of treatment or alleviation of symptoms of disease.

` cq. Tube - An x-ray tube, unless otherwise specified.

cr. Tube housing assembly - The tube housing with tube installed. It includes high-voltage and/or filament transformers and other appropriate elements when such are contained within the tube housing.

cs. Tube rating chart - The set of curves which specify the rated limits of operation of the tube in terms of the technique factors.

ct. Useful beam - The radiation which passes through the tube housing port and the aperture of the beam-limiting device when the exposure switch or timer is activated.

cu. Variable-aperture beam-limiting device - A beam-limiting device which has capacity for stepless adjustment of the x-ray field size at a give SID.

cv. Visible area - That portion of the input surface of the image receptor over which incident x-ray photons are producing a visible image.

cw. Wedge filter - An added filter effecting continuous progressive attenuation on all or part of the useful beam.

cx. X-ray control - A device which controls input power to the x-ray high-voltage generator and/or the x-ray tube. It includes equipment such as timers, phototimers, automatic brightness stabilizers and similar devices, which control the technique factors of an x-ray exposure.

RH-1601. (Cont'd)

cy. X-ray equipment - An x-ray system, subsystem or component thereof. Types of x-ray equipment are as follows:

1. Mobile x-ray equipment: X-ray equipment mounted on a permanent base with wheels and/or casters for moving while completely assembled.

2. Portable x-ray equipment: X-ray equipment designed to be hand-carried.

3. Stationary x-ray equipment: X-ray equipment which is installed in a fixed location.

cz. X-ray field - The area of the intersection of the useful beam and any one of the set of planes parallel to and including the plane of the image receptor, whose perimeter is the locus of points at which the exposure rate is one-fourth of the maximum in the intersection.

da. X-ray high-voltage generator - A device which transforms electrical energy from the potential supplied by the x-ray control to the tube operating potential. The device may also include means for transforming alternating current to direct current, filament transformers for the x-ray tube(s), high-voltage switches, electrical protective devices and other appropriate elements.

db. X-ray system - An assemblage of components for the controlled production of x-rays. It includes an x-ray high-voltage generator, an x-ray control, a tube housing assembly, a beam-limiting device and the necessary supporting structures. Additional components which function with the system are considered integral parts of the system.

dc. X-ray subsystem - Any combination of two or more components of an x-ray system.

dd. X-ray tube - Any electron tube which is designed to be used primarily for the production of x-rays.

RH-1602. General Requirements.

a. Administrative Controls. Registrant. The registrant shall be responsible for directing the operation of the x-ray systems which have been registered with the Department. The registrant or the registrant's agent shall assure that the requirements of RH-1602.a are met in the operation of the x-ray system(s).

1. An x-ray system which does not meet the provisions of these Regulations shall not be operated for diagnostic or therapeutic purposes.

2. Individuals who will be operating the x-ray systems shall be adequately instructed in the safe operating procedures and be competent in the safe use of the equipment.

3. A chart shall be provided in the vicinity of the diagnostic x-ray system's control panel which specifies, for all examinations performed with that system, the following information:

   A. Patient's anatomical size versus technique factors to be utilized;

   B. Type and size of the film or film-screen combination to be used;

   C. Type and focal distance of the grid to be used, if any;

   D. Source to image receptor distance to be used; and

   E. Type and location of placement of gonad shielding to be used.

   F. For mammography, indication of kVp/target/filter combination.

4. Written safety procedures and rules shall be provided to each individual operating x-ray equipment, including any restrictions of the operating technique required for the safe operation of the particular x-ray system. The operator shall be able to demonstrate familiarity with these rules.

5. Except for patients who cannot be moved out of the room, only the staff and ancillary personnel required for the medical procedure or training shall be in the room during the radiographic exposure. Other than the patient being examined:

   A. All individuals shall be positioned such that no part of the body will be struck by the useful beam unless protected by 0.5 millimeter lead equivalent.

   B. Staff and ancillary personnel shall be protected from the direct scatter radiation by protective aprons or whole body protective barriers of not less than 0.25 millimeter lead equivalent.

C. Patients who cannot be removed from the room shall be protected from the direct scatter radiation by whole body protective barriers of 0.25 millimeter lead equivalent or shall be so positioned that the nearest portion of the body is at least two meters from both the tube head and the nearest edge of the image receptor.

6. New gonad shielding of not less than 0.5 millimeter lead equivalent material shall be used for human patients, who have not passed the reproductive age, during radiographic procedures in which the gonads are in the useful beam, except for cases in which this would interfere with the diagnostic procedure.

7. Individuals shall not be exposed to the useful beam except for healing arts purposes and such exposure has been authorized by a licensed practitioner of the healing arts. This provision specifically prohibits deliberate exposure for the following purposes:

A. Exposure of an individual for training, demonstration or other non-healing-arts purposes; and

B. Exposure of an individual for the purpose of healing arts screening except as authorized by RH-1602.a.11.

8. When a patient or film must be provided with auxiliary support during a radiation exposure:

A. Mechanical holding devices shall be used when the technique permits.

B. If a human holder must be utilized:

i. Written safety procedures, as required by RH-1602.a.4 shall indicate the requirements for selecting a holder and the procedure the holder shall follow;

ii. The human holder shall be protected as required by RH-1602.a.5;

iii. No individual shall be used routinely to hold film or patients;

iv. Such holding shall be permitted only in very unusual and rare situations;

v. In those cases where the patient must hold the film, except during intra-oral examinations, any portion of the body, other than the area of clinical interest, struck by the useful beam shall be protected by not less than 0.5 millimeter lead equivalent material; and

vi. Each facility shall have leaded aprons and gloves available in sufficient numbers to provide protection to all personnel who are involved with x-ray operations and who are otherwise not shielded.

9. Procedures and auxiliary equipment designed to minimize patient and personnel exposure commensurate with the needed diagnostic information shall be utilized. This is interpreted to include but not limited to:

A. The speed of film or screen and film combinations shall be the fastest speed consistent with the diagnostic objective of the examinations.

B. The radiation exposure to the patient shall be the minimum exposure required to produce images of good diagnostic quality.

C. Portable or mobile equipment shall be used only for examinations where it is impractical to transfer the patient(s) to a stationary radiographic installation.

D. X-ray systems subject to RH-1604 shall not be utilized in procedures where the source to patient distance is less than 30 centimeters.

i. X-ray systems shall not be utilized in procedures where the source to patient distance is less than 30 centimeters, except for veterinary systems.

ii. If grids are used between the patient and the image receptor to decrease scatter to the film and improve contrast, the grid shall:

(a) Be positioned properly, i.e., tube side facing the right direction, and grid centered to the central ray;

(b). If of the focused type, be of the proper focal distance for the SIDs being used.

10. All individuals who are associated with the operation of an x-ray system are subject to the requirements of RH-1200.

A. When protective clothing or devices are worn on portions of the body and a monitoring device(s) is required, at least one such monitoring device shall be utilized as follows:

i. When an apron is worn, the monitoring device shall be worn at the collar outside of the apron.

ii. The dose to the whole body based on the maximum dose attributed to the most critical organ shall be recorded in the reports required by Part F of these Regulations. If more than one device is used and a record is made of the data, each dose shall be identified with the area where the device was worn on the body.

B. Exposure of a personnel monitoring device to deceptively indicate a dose delivered to an individual is prohibited.

11. Health arts screening. Any person proposing to conduct a healing arts screening program shall not initiate such a program without prior approval of the Department. When requesting such approval, that person shall submit the information as deemed necessary by the Department. If any information submitted to the Department becomes invalid or outdated, the Department will be notified in writing within thirty (30) days.

12. Information and maintenance record and associated information. The registrant shall maintain the following information for each x-ray system for inspection by the Department:

A. Maximum rating of technique factors;

B. Model and serial numbers of all certifiable components;

C. Aluminum equivalent filtration of the useful beam, including any routine variation;

D. Tube rating charts and cooling curves;

E. Records of surveys, calibrations, maintenance and modifications performed on the X-ray system(s) after July 1, 1983 with the names of persons who performed such services;

F. A scale drawing of the room in which a stationary x-ray system is located with such drawing indicating the use of areas adjacent to the room and an estimation of the extent of occupancy by an individual in such areas. In addition, the drawing shall include:

i. The results of a survey for radiation levels present at the operator's position and at pertinent points outside the room at specified test conditions; or

ii. The type and thickness of materials or lead equivalency, of each protective barrier; and

G. A copy of all correspondence with the Department regarding that x-ray system.

13. X-ray log. Each facility shall maintain an x-ray log containing the patient I.D., the type of examinations and the dates the examinations were performed. When the patient or film must be provided with human auxiliary support, the name of the human holder shall be recorded.

b. General Requirements for All Diagnostic X-Ray Systems. In addition to other requirements of this Part, all diagnostic x-ray systems shall meet the following requirements:

1. Warning label. The control panel containing the main power switch shall bear the warning statement or its equivalent, legible and accessible to view:

"WARNING: This x-ray unit may be dangerous to patient and operator unless safe exposure factors and operating instructions are observed."

2. Battery charge indicator. On battery-powered x-ray generators, visual means shall be provided on the control panel to indicate whether the battery is in a state of charge adequate for proper operation.

3. Leakage radiation from the diagnostic source assembly. The leakage radiation from the diagnostic source assembly measured at a distance of one (1) meter in any direction from the source shall not exceed 100 milliroentgens in one (1) hour when the x-ray tube is operated at its leakage technique factors. Compliance shall be determined by measurements averaged over an area of 100 square centimeters with no linear dimension greater than 20 centimeters.

4. Radiation from components other than the diagnostic source assembly. The radiation emitted by a component other than the diagnostic source assembly shall not exceed 2 milliroentgens in one (1) hour at 5 centimeters from any accessible surface of the component when it is operated in an assembled x-ray system under any conditions for which it was designed. Compliance shall be determined by measurements averaged over an area of 100 square centimeters with no linear dimension greater than 20 centimeters.

5. Beam quality.

   A. Half-value layer.

      i. The half-value layer of the useful beam for a given x-ray tube potential shall not be less than the values shown in Table I. If it is necessary to determine such half-value layer at an x-ray tube potential which is not listed in Table I, linear interpolation or extrapolation may be made.

TABLE I

Design Operating Range (Kilovolts peak)	Measured Potential (Kilovolts peak)	Half-value Layer (Millimeters of aluminum)
------ Below 50 ------	30	0.3
	40	0.4
	49	0.5
------ 50 to 70 ------	50	1.2
	60	1.3
	70	1.5
------ Above 70 ------	71	2.1
	80	2.3
	90	2.5
	100	2.7
	110	3.0
	120	3.2
	130	3.5
	140	3.8
	150	4.1

ii. The requirements of RH-1602.b.5.A.i will be considered to have been met if it can be demonstrated that the aluminum equivalent of the total filtration in the primary beam is not less than that shown in Table II.

TABLE II

Filtration Required vs. Operating Voltage	
Operating Voltage (kVp)	Total Filtration (inherent plus added) (millimeters aluminum equivalent)
Below 50	0.5 millimeters
50 to 70	1.5 millimeters
Above 70	2.5 millimeters

iii. Beryllium window tubes shall have a minimum of 0.5 millimeter aluminum equivalent filtration permanently installed in the useful beam.

iv. For capacitor energy storage equipment, compliance with the requirements of RH-1602.b.5 shall be determined with the maximum quantity of charge per exposure.

v. The required minimal aluminum equivalent filtration shall include the filtration contributed by all materials which are always present between the source and the patient.

B. Filtration controls. For x-ray systems which have variable kVp and variable filtration for the useful beam, a device shall link the kVp selector with the filter(s) and shall prevent an exposure unless the minimum amount of filtration required by RH-1602.b.5.A.i or ii is in the useful beam for the given kVp which has been selected.

6. Multiple tubes. Where two or more radiographic tubes are controlled by one exposure switch, the tube or tubes which have been selected shall be clearly indicated prior to initiation of the exposure. This indication shall be both on the x-ray control panel and at or near the tube housing assembly which has been selected.

7. Mechanical support of tube head. The tube housing assembly supports shall be adjusted such that the tube housing assembly will remain stable during an exposure unless tube housing movement is a designed function of the x-ray system.

c. Other Requirements

1. Pass boxes, if provided, shall be so constructed as to exclude light from the darkroom when cassettes are placed in or removed from boxes, and shall incorporate adequate shielding from stray radiation to prevent exposure of undeveloped film.

2. The darkroom shall be light tight and use proper safelighting such that any film type in use exposed in a cassette to x-radiation sufficient to produce an optical density for 1 to 2 when processed shall not suffer an increase in density greater than 0.1 (0.05 mammography) when exposed in the darkroom for two (2) minutes with al safelights on. If used, daylight film handling boxes shall preclude fogging of the film.

3. Darkrooms typically used by more than one individual shall be provided a method to prevent accidental entry while undeveloped films are being handled or processed.

4. Film shall be stored in a cool, dry place and shall be protected from exposure to stray radiation. Film in open packages shall be stored in a light tight container.

5. Film cassettes and intensifying screens shall be inspected periodically and shall be cleaned and replaced as necessary to best assure radiographs of good diagnostic quality.

6. Outdated x-ray film shall not be used for diagnostic radiographs, unless the film has been stored in accordance with manufacturer's recommendations and a sample of the film passes a sensitometric test for normal ranges of base plus fog and speed.

7. Film developing solutions shall be prepared in accordance with the directions given by the manufacturer, and shall be maintained in strength by replenishment or renewal so that full development is accomplished within the time specified by the manufacturer.

   A. The technique factors to be used during an exposure shall be indicated before the exposure begins. If automatic exposure controls are used, the technique factors which are set prior to the exposure shall be indicated. The requirement may be permanent markings on equipment having fixed technique factors. Indication of technique factors shall be visible from the operator's position except in the case of spot films made by the fluoroscopist.

   B. The requirement may be permanent markings on equipment having fixed technique factors. Indication of technique factors shall be visible from the operator's position except in the case of spot films made by the fluoroscopist.

8. Maintaining Compliance. Diagnostic x-ray systems and their associated components used on humans and certified pursuant to the Federal X-Ray Equipment Performance Standard (21 CFR Part 1020) shall be maintained in compliance with applicable requirements of that standard.

9. Locks. All position locking, holding, and centering devices on x-ray system components and systems shall function as intended.

RH-1603. Fluoroscopic X-Ray Systems. All fluoroscopic x-ray systems shall meet the following requirements:

a. Limitation of Useful Beam.

1. Primary barrier.

A. The fluoroscopic imaging assembly shall be provided with a primary protective barrier which intercepts the entire cross section of the useful beam at any SID.

B. The x-ray tube used for fluoroscopy shall not produce x-rays unless the barrier is in position to intercept the entire useful beam.

2. X-ray field.

A. The x-ray field produced by non-image intensified fluoroscopic equipment shall not extend beyond the entire visible area of the image receptor. This requirement applies to field size for both fluoroscopic procedures and spot filming procedures. In addition:

i. Means shall be provided for stepless adjustment of the field size;

ii. The minimum field size at the greatest SID shall be equal to or less than five (5) centimeters by five centimeters; and

iii. For equipment manufactured after February 25, 1978, when the angle between the image receptor and the beam axis of the x-ray beam is variable, means shall be provided to indicate when the axis of the x-ray beam is perpendicular to the plane of the image receptor.

Compliance with RH-1603.a.2.A shall be determined with the beam axis indicated to be perpendicular to the plane of the image receptor.

B. For image-intensified fluoroscopic equipment, neither the length nor the width of the x-ray field in the plane of the image receptor shall exceed that of the visible area of the image receptor by more than three percent of the SID. The sum of the excess length and the excess width shall be no greater than four percent of the SID. This requirement applies to field size for both fluoroscopic and spot filming procedures. In addition:

i. Means shall be provided to permit further limitation of the field. Beam-limiting devices manufactured after May 22, 1979 and incorporated in equipment with a variable SID and/or a visible area of greater than 300 square centimeters shall be provided with means for stepless adjustment of the x-ray field;

ii. The minimum field size at the greatest SID shall be equal to or less than five centimeters by five centimeters;

iii. All equipment with a fixed SID and a visible area of 300 square centimeters or less shall be provided with either stepless adjustment of the x-ray field or with means to further limit the x-ray field size at the plane of the image receptor to 125 square centimeters or less. Stepless adjustment shall, at the greatest SID, provide continuous field sizes from the maximum obtainable to a field size of five (5) by five centimeters or less;

iv. For equipment manufactured after February 25, 1978, when the angle between the image receptor and beam axis is variable, means shall be provided to indicate when the axis of the x-ray beam is perpendicular to the plane of the image receptor; and

v. Compliance shall be determined with the beam axis indicated to be perpendicular to the plane of the image receptor. For rectangular x-ray fields used with circular image reception, the error in alignment shall be determined along the length and width dimensions of the x-ray field which pass through the center of the visible area of the image receptor.

C. Spot-film devices which are certified components shall meet the following additional requirements:

i. Means shall be provided between the source and the patient for adjustment of the x-ray field size in the plane of the film to the size of that portion of the film which has been selected on the spot film selector. Such adjustment shall be automatically accomplished except when the x-ray field size in the plane of the film is smaller than that of the selected portion of the film. For spot film devices manufactured after June 21, 1979, if the x-ray field size is less than the size of the selected portion of the film, the means for adjustment of the field size shall be only at the operator's option;

ii. It shall be possible to adjust the x-ray field size in the plane of the film to a size smaller than the selected portion of the film. The minimum field size at the greatest SID shall be equal to or less than, five (5) centimeters by five centimeters;

iii. The center of the x-ray field in the plane of the film shall be aligned with the center of the selected portion of the film to within two (2) percent of the SID; and

iv. For spot-film devices manufactured after February 25, 1978, if the angle between the plane of the image receptor and beam axis is variable, means shall be provided to indicate when the axis of the x-ray beam is perpendicular to the plane of the image receptor. Compliance with RH-1603.a.2.A and B shall be determined with the beam axis indicated to be perpendicular to the plane of the image receptor.

b. Activation of the Fluoroscopic Tube. X-ray production in the fluoroscopic mode shall be controlled by a device which requires continuous pressure by the fluoroscopist for the entire time of any exposure. When recording serial fluoroscopic images, the fluoroscopist shall be able to terminate the x-ray exposure(s) at any time, but means may be provided to permit completion of any single exposure of the series in process.

c. Exposure Rate Limits.

1. Entrance exposure rate allowable limits.

A. The exposure measured at the point where the center of the useful beam enters the patient shall not exceed 10 roentgens per minute, except during recording of fluoroscopic images or when provided with optional high level control.

B. When provided with optional high level control, the equipment shall not be operable at any combination of tube potential and current which will result in an exposure rate in excess of 5 roentgens per minute at the point where the center of the useful beam enters the patient unless the high level control is activated.

i. Special means of activation of high level controls shall be required. The high level control shall only be operable when continuous manual activation is provided by the operator.

ii. A continuous signal audible to the fluoroscopist shall indicate that the high level control is being employed.

C. In addition to the other requirements of RH-1603, certified equipment which does not incorporate an automatic exposure control shall not be operable at any combination of tube potential and current which will result in an exposure rate in excess of 5 roentgens per minute at the point where the center of beam enters the patient except during recording of fluoroscopic images or when provided with an optional high level control.

D. Compliance with the requirements of RH-1603.c shall be determined as follows:

i. Movable grids and compression devices shall be removed from the useful beam during the measurement.

ii. If the source is below the table, exposure rate shall be measured or referenced to a point one (1) centimeter above the tabletop or cradle.

iii. If the source is above the table, the exposure rate shall be measured at 30 centimeters above the tabletop with the end of the beam-limiting device or spacer positioned as closely as possible to the point of measurement.

iv. In a C-arm type of fluoroscope, the exposure rate shall be measured 30 centimeters from the input surface of the fluoroscopic imaging assembly.

v. For a lateral type fluoroscope, the exposure rate shall be measured at a point 15 centimeters from the centerline of the x-ray table and in the direction of the x-ray source with the end of the beam-limiting device or spacer positioned as closely as possible to the point of measurement. If the tabletop is movable, it shall be positioned as closely as possible to the lateral x-ray source, with the end of the beam-limiting device or spacer no closer than 15 centimeters to the centerline of the x-ray table.

2. Barrier transmission radiation rate limits.

A. For non-image intensified fluoroscopes, the exposure rate due to transmission through the viewing screen shall not exceed 50 milliroentgens per hour;

B. For image intensified fluoroscopes, the exposure rate due to transmission through the primary protective barrier with the attenuation block in the useful beam, combined with the radiation from the image intensifier shall not exceed 2 milliroentgens per hour at 18 centimeters from any accessible surface of the fluoroscopic imaging assembly beyond the plane of the image receptor for each roentgen per minute of entrance exposure rate.

C. For certified image intensified fluoroscopic systems, the exposure rate due to transmission through the primary protective barrier with the attenuation block in the useful beam, combined with the radiation from the image intensifier, shall not exceed 2 milliroentgens per hour at 10 centimeters from any accessible surface of the fluoroscopic imaging assembly beyond the plane of the image receptor for each roentgen per minute of entrance exposure rate.

D. Measuring compliance of barrier transmission.

i. For non-image intensified fluoroscopes, the exposure rate shall be determined with the screen positioned 35 centimeters from the panel or tabletop with no attenuation block in the beam.

ii. For image intensified fluoroscopes:

(a). The exposure rate due to transmission through the primary protective barrier combined with radiation from the image intensifier shall be determined by measurements averaged over an area of 100 square centimeters with no linear dimension greater than 20 centimeters.

(b). If the source is below the tabletop, the measurement shall be made with the input surface of the fluoroscopic imaging assembly positioned 30 centimeters above the tabletop.

(c). If the source is above the tabletop and the SID is variable, the measurement shall be made with the end of the beam-limiting device or spacer as close to the tabletop as it can be placed, provided that it shall not be closer than 30 centimeters.

(d). Movable grids and compression devices shall be removed from the useful beam during the measurement.

(e). The attenuation block shall be positioned in the useful beam ten (10) centimeters from the point of measurement of entrance exposure rate and between this point and the input surface of the fluoroscopic imaging assembly.

d. Indication of Potential and Current. During fluoroscopy and cinefluorography, the kV and the mA shall be continuously indicated.

1. Periodic measurement of entrance exposure rate shall be performed by a qualified expert for both typical and maximum values as follows:[2/]

A. Such measurements shall be made annually or after any maintenance of the system which might affect the exposure rate.

B. Results of these measurements shall be available where any fluoroscopist may have ready access to such results while using the fluoroscope. The measurement results shall be stated in coulombs per kilogram or mR/hr and included the technique factors used in measurements and the date the measurements were performed shall be included in the results.

C. Conditions of periodic measurement of typical entrance exposure rate are as follows:

i. The measurement shall be made under the conditions that satisfy the requirement;

ii. The kVp. MA, and /or other selectable parameters shall be adjusted to those settings typical of clinical use on 23 cm thick abdominal patient;

iii. The x-ray system that incorporates automatic exposure rate control shall have sufficient attenuative material placed in the useful beam to produce a milliamperage and/or kilovoltage to satisfy the conditions.

D. Conditions of periodic measurement of maximum entrance exposure rate are as follows:

i. The measurements shall be made under the conditions that satisfy the requirements.;

ii. The kVp, mA and/or other selectable parameters shall be adjusted to those settings which give the maximum entrance exposure rate;

iii. The x-ray system(s) that incorporates automatic exposure rate control shall have sufficient attenuative material placed in the useful beam to produce the maximum entrance exposure rate of the system.

e. Source-Skin Distance. The source to skin distance shall not be less than:

1. 38 centimeters on stationary fluoroscopes installed after July 1, 1974;

2. 30.5 centimeters on stationary fluoroscopes which are in operation prior to July 1, 1975;

3. 30.5 centimeters on all mobile fluoroscopes; and

4. 20 centimeters for image intensified fluoroscopes used for specific surgical application. The users' operating manual must provide precautionary measures to be adhered to during the use of this device.

f. Fluoroscopic Timer.

1. Means shall be provided to preset the cumulative on-time of the fluoroscopic tube. The maximum cumulative time of the timing device shall not exceed five minutes without resetting.

2. At the completion of any preset cumulative on-time either:

A. The fluoroscopic tube output will be terminated; or

B. A signal audible to the fluoroscopist indicate the completion of any preset shall cumulative on-time. Such signal shall continue to sound while x-rays are produced until the timing device is reset.

g. Mobile Fluoroscopes. In addition to the other requirements of RH-1603, mobile fluoroscopes shall provide intensified imaging.

h. Control of Scattered Radiation.

1. Fluoroscopic table designs when combined with procedures utilized shall be such that no unprotected part of any staff or ancillary individual's body shall be exposed to un-attenuated scattered radiation which originates from under the table.

The attenuation required shall be not less than 0.25 millimeter lead equivalent.

2. Equipment configuration when combined with procedures shall be such that no portion of any staff or ancillary individual's body, except the extremities, shall be exposed to the un-attenuated scattered radiation emanating from above the tabletop unless that individual;

A. Is at least 120 centimeters from the center of the useful beam, or

B. The radiation has passed through not less than 0.25 millimeter lead equivalent material (e.g., drapes, Bucky-slot cover, sliding or folding panel or self-supporting curtains) in addition to any lead equivalency provided by the protective apron referred to in RH-1602.a.5.

3. Exceptions to RH-1603.h.2 may be made in some special procedures where a sterile field will not permit the use of the normal protective barriers. Where the use of pre-fitted sterilized covers for the barriers is practical, the Department shall not permit such exception.

i. Radiation Therapy Simulation Systems. Radiation therapy simulation systems shall be exempt from all the requirements of RH-1603.a, c.2 and f provided that:

A. Such systems are designed and used in such manner that no individual other than the patient a is in the x-ray room during periods of time when the system is producing x-rays; and

B. Such systems as do not meet the requirements of RH-1603.f are provided with a means of indicating the cumulative time that an individual patient has been exposed to x-rays. Procedures shall require in such cases that the timer be reset between examinations.

j. Override. If a means exists to override any of the automatic x-ray field size adjustments, that means:

1. Shall be designed for use only in the event of system failure;

2. Shall incorporate a signal visible at the fluoroscopist's position which will indicate whenever the automatic field size adjustment is overridden; and

3. Shall be clearly and durably labeled.

RH-1604. Radiographic Systems Other than Fluoroscopic, Dental Intraoral or Veterinarian Systems.

a. Beam Limitation and Alignment. The useful beam shall be limited to the area of clinical interest.

1. The size of the x-ray beam projected by fixed aperture cones and collimators shall not exceed the dimensions of the image receptor by more than two (2) inches for a source to image receptor distance of seventy-two (72) inches or one (1) inch for a source to film distance of forty (40) inches or less.

2. For systems with variable aperture beam limiting devices, means shall be provided for visually defining the perimeter of the x-ray field.

A. The beam-limiting device for stationary general purpose x-ray systems shall numerically indicate the field size in the plane of the image receptor to which it is adjusted.

B. Indication of field size dimensions and SID's shall be specified in inches and/or centimeters and shall be such that aperture adjustments result in x-ray field dimensions in the plane of the image receptor which correspond to those

indicated by the beam-limiting device to within two (2) percent of the SID when the beam axis is indicated to be perpendicular to the plane of the image receptor.

C. The total misalignment of the edges of the x-ray field along either the length or width of the visually defined field shall not exceed two percent of the distance from the source to the center of the visually defined field when the surface upon which it appears is perpendicular to the axis of the x-ray beam.

3. For stationary general purpose x-ray systems, means shall be provided to indicate when the axis of the x-ray beam is perpendicular to the plane of the image receptor and to align the center of the image receptor to within two percent of the source to image receptor distance.

4. The Department may grant an exemption on non-certified x-ray systems to RH-1604.a.2.B provided the registrant makes a written application for such exemption and in that application:

A. demonstrates it is impractical to comply with RH-1604.a.2.B; and

B. the purpose of RH-1604.a.2.B will be met by other methods.

5. Systems designed for or provided with special attachments for mammography. Radiographic systems designed only for mammography and general purpose radiographic systems, when special attachments for mammography are in service, shall be provided with means to limit the useful beam such that the x-ray field at the plane of the image receptor does not extend beyond any edge of the image receptor at any designated SID except the edge of the image receptor designed to be adjacent to the chest wall where the x-ray field may not extend beyond this edge by more than two (2%) percent of the SID. This requirement can be met with a system which performs as prescribed in RH-1604.f.8. When the beam-limiting device and image receptor support device are designed to be used to immobilize the breast during a mammographic procedure and the SID may vary, the SID indication specified in RH-1604.f.8.c.i and ii shall be the maximum SID for which the beam-limiting device or aperture is designed. In addition, each image receptor support intended for installation on a system designed only for mammography shall have clear and permanent markings to indicate the maximum image receptor size for which it is designed.

b. Radiation Exposure Control Devices.

1. Technique indicators.

A. The technique factors to be used during an exposure shall be indicated before the exposure begins, except when automatic exposure controls are used, in which case the technique factors which are set prior to the exposure shall be indicated.

B. The requirement of RH-1604.b.1.A may be met by permanent markings on equipment having fixed technique factors. Indication of technique factors shall be visible from the operator's position except in the case of spot films made by the fluoroscopist.

2. Timers. Means shall be provided to terminate the exposure at a preset time interval, preset product of current and time, a preset number of pulses or a preset radiation exposure to the image receptor. In addition, it shall not be possible to make an exposure when the timer is set to a "zero" or "off" position if either position is provided.

3. X-ray control.

A. An x-ray control shall be incorporated into each x-ray system such that an exposure can be terminated by the operator at any time except for:

i. Exposure of one-half second or less, or

ii. During serial radiography when means shall be provided to permit completion of any single exposure of the series in process.

B. Each x-ray control shall be located in such a way as to meet the following requirements:

i. For stationary x-ray systems:

(a). The operator's station at the control shall be behind a protective barrier. The exposure switch shall be of the dead-man type and shall be so arranged that it cannot be conveniently operated outside a shielded area. Exposure switches for "spot film" devices used in conjunction with fluoroscopes are exempted from this shielding requirement.

(b). A window of lead-equivalent glass equal to that required by the adjacent barrier or a mirror system, shall be provided and it shall be large enough and so placed that the operator can see the patient during the exposure without having to leave the protected area.

ii. For mobile and portable x-ray systems:

(a). The exposure switch shall be of the dead-man type and shall be so arranged that the operator can stand at least six (6) feet from the patient and well away from the useful beam.

(b). Used for greater than one (1) week in the same location, i.e., a room or suite, shall meet the requirements of RH-1604.b.3.B. i.(a).

(c). Used for greater than one hour and less than one (1) week at the same location, i.e., a room or suite, shall meet the requirement of RH-1604.b.3.B. ii.(b) or be provided with a 6.5 feet [11.98 m] high protective barrier which is placed at least six (6) feet [1.83 m] from the tube housing assembly and at least six (6) feet [1.83 m] from the patient; or

iii. For all x-ray systems, the x-ray control shall provide visual indication observable at or from the operator's protected position whenever x-rays are produced. In addition, a signal audible to the operator shall indicate that the exposure has terminated.

4. Automatic exposure controls. When an automatic exposure control is provided:

A. Indication shall be made on the control panel when this mode of operation is selected;

B. If the x-ray tube potential is equal to or greater than 50 kVp, the minimum exposure time for field emission equipment rated for pulsed operation shall be equal to or less than a time interval equivalent to two (2) pulses;

C. The minimum exposure time for all equipment other than that specified in RH-1604.b.4.B shall be equal to or less than one-sixtieth second or a time interval required to deliver 5 mAs, whichever is greater;

D. Either the product of peak x-ray tube potential, current and exposure time shall be limited to not more than 60 kWs per exposure or the product of x-ray tube current and exposure time shall be limited to not more than 600 mAs per exposure except when the x-ray tube potential is less than 50 kVp in which case the product of x-ray tube current and exposure time shall be limited to not more than 2000 mAs per exposure; and

E. A visible signal shall indicate when an exposure has been terminated at the limits required by RH-1604.b.3.D and manual resetting shall be required before further automatically timed exposures can be made.

5. Timer reproducibility. With a timer setting of 0.5 seconds or less, the average exposure period (T) shall be greater than or equal to five (5) times the maximum exposure period (T_{max}) minus the minimum exposure period (T_{min}) when four timer tests are performed: $T \geq 5(T_{max} - T_{min})$.

c. Source-to-Skin Distance. All mobile or portable radiographic systems shall be provided with means to limit the source-to-skin distance to not less than 30 centimeters.

d. Exposure Reproducibility. The exposure reproducibility shall meet the following requirements:

The coefficient of variation shall not exceed 0.10 when all technique factors are held constant. This requirement shall be deemed to have been met if, when four (4) exposures are made at identical technique factors, that the value of the average exposure (E) is greater than or equal to five times the maximum exposure (E_{max}) minus the minimum exposure (E_{min}):

i.e., $E \geq 5(E_{max} - E_{min})$.

e. Radiation from Capacitor Energy Storage Equipment in Standby Status. Radiation emitted from the x-ray tube when the exposure switch or timer is not activated shall not exceed a rate of 2 milliroentgens per hour at 5 centimeters from any accessible surface of the diagnostic source assembly, with the beam-limiting device fully open.

f. Additional Requirements Applicable to Certified Systems Only. Diagnostic x-ray systems incorporating one or more certified component(s) shall be required to comply with the following additional requirement(s) which relate to that certified component(s).

1. Reproducibility. When the equipment is operated on an adequate power supply as specified by the manufacturer in accordance with the requirements of applicable Federal standards, the estimated coefficient of variation of radiation exposures shall be no greater than 0.05, for any specific combination of selected technique factors.

2. Linearity. When the equipment allows a choice of x-ray tube current settings and is operated on a power supply as specified by the manufacturer in accordance with the requirements of applicable Federal standards, for any fixed x-ray tube potential within the range of 40 percent to 100 percent of the maximum rating, the average ratios of exposure to the indicated milliampere-seconds product, i.e., mR/mAs, obtained at any two (2) consecutive tube current settings shall not differ by more than 0.10 times their sum,

$$\text{i.e.,} \left| \overline{X_1} - \overline{X_2} \right| \leq 0.10(\overline{X_1} + \overline{X_2}),$$

where X_1 and X_2 are the average mR/mAs values obtained at each of two (2) consecutive tube current settings.

3. Accuracy. Deviation of technique factors from indicated values shall not exceed the limits specified for that system by its manufacturer.

4. Beam limitation for stationary and mobile general purpose x-ray systems.

   A. There shall be provided a means of stepless adjustment of the size of the x-ray field. The minimum field size at an SID of 100 centimeters shall be equal to or less than five centimeters by five centimeters.

   B. Means shall be provided for visually defining the perimeter of the x-ray field. The total misalignment of the edges of the visually defined field with the respective edges of the x-ray field along either the length or width of the visually defined field shall not exceed two (2%) percent of the distance from the source to the center of the visually defined field when the surface upon which it appears is perpendicular to the axis of the x-ray beam.

   C. When a light localizer is used to define the x-ray field, it shall provide an average illumination of not less than 160 lux or 15 foot-candles at 100 centimeters or at the maximum SID, whichever is less. The average illumination shall be based upon measurements made in the approximate center of each quadrant of the light field. Radiation therapy simulation systems manufactured on or after May 27, 1980, are exempt from this requirement.

D. The edge of the light field at 100 centimeters or at the maximum SID, whichever is - less, shall have a contrast ratio, corrected for ambient lighting, of not less than four (4) in the case of beam-limiting devices designed for use on stationary equipment and a contrast ratio of not less than three (3) in the case of beam-limiting devices designed for use on mobile equipment. The contrast ratio is defined as I_1/I_2 where I_1 is the illumination three millimeters from the edge of the light field toward the center of the field; and I_2 is the illumination three millimeters from the edge of the light field away from the center of the field. Compliance shall be determined with a measuring instrument aperture of one millimeter in diameter.

5. Beam limitation for portable x-ray systems. Beam limitation for portable x-ray systems shall meet the beam limitation requirements of RH-1604.a and RH-1604.f.4.

6. Field limitation and alignment on stationary general purpose x-ray systems.

A. Means shall be provided to indicate when the axis of the x-ray beam is perpendicular to the plane of the image receptor, to align the center of the x-ray field with respect to the center of the image receptor to within two (2%) percent of the SID and to indicate the SID to within two (2%) percent.

B. The beam-limiting device shall numerically indicate the field size in the plane of the image receptor to which it is adjusted; and

C. Indication of field size dimensions and SID's shall be specified in inches and/or centimeters and shall be such that aperture adjustments result in x-ray field dimensions in the plane of the image receptor which correspond to those indicated by the beam-limiting device to within two percent of the SID when the beam axis is indicated to be perpendicular to the plane of the image receptor.

D. The following requirements shall apply to stationary general purpose x-ray systems which contain a tube housing assembly, an x-ray control and for those systems so equipped, a table, all of which are certified components:

i. Means shall be provided for positive beam limitation which will, at the SID for which the device is designed, either cause automatic adjustment of the x-ray field in the plane of the image receptor to the image receptor size within five (5) seconds after insertion of the image receptor or, if adjustment is accomplished automatically in a time interval greater than five (5) seconds or is manual, will prevent production of x-rays until such adjustment is completed. For the SID at which the device is not intended to operate, the device shall prevent the production of x-rays.

ii. The x-ray field size in the plane of the image receptor, whether automatically or manually adjusted, shall be such that neither the length nor the width of the x-ray field differs from that of the image receptor by greater than three percent of the SID and that the sum of the length and width differences without regard to sign (+/-) be no greater than four (4%) percent of the SID when the equipment indicates that the beam axis is perpendicular to the plane of the image receptor.

iii. The radiographic system shall be capable of operation, at the discretion of the operator, such that the field size at the image receptor can be adjusted to a size smaller than the image receptor. The minimum field size at a distance of 100 centimeters shall be equal to or less than five (5) centimeters by five (5) centimeters. Return to positive beam limitation as specified in RH-1604.f.6.D.i and ii shall occur upon a change in image receptor.

iv. Positive beam limitation may be bypassed when radiography is conducted which does not use the cassette holder or when either the beam axis or table angulation is not within ten (10^0) degrees of the horizontal or vertical during any part of the exposure or during stereoscopic radiography. If the bypass mode is provided, return to positive beam limitation shall be automatic.

v. A capability may be provided for over-riding positive beam limitation in the event of system failure or to perform special procedures which cannot be performed in the positive mode. If so provided, a key shall be required to override the positive mode. It shall be impossible to remove the key while the positive mode is overridden.

7. X-ray systems designed for one image receptor size. Radiographic equipment designed for only one image receptor size at a fixed SID shall be provided with means to limit the field at the plane of the image receptor to dimensions no greater than those of the image receptor and to align the center of the x-ray field with the center of the image receptor to within two percent of the SID or shall be provided with means to both size and align the x-ray field at the plane of the image receptor such that the x-ray field does not extend beyond any edge of the image receptor.

8. Special purpose x-ray systems.

A. Means shall be provided to limit the x-ray field in the plane of the image receptor so that such field does not exceed each dimension of the image receptor by more than two percent of the SID when the axis of the x-ray beam is perpendicular to the plane of the image receptor.

B. Means shall be provided to align the center of the x-ray field with the center of the image receptor to within two percent of the SID.

C. RH-1604.f.8.A and B may be met with a system that meets the requirements for a general purpose x-ray system as specified in RH-1604.a or, when alignment means are also provided, may be met with either:

RH-1604. (Cont'd)

i. An assortment of removable, fixed aperture, beam-limiting devices sufficient to meet the requirement for combination of image receptor size and SID for which the unit is designed with each such device having clear and permanent markings to indicate the image receptor size and SID for which it is designed; or

ii. A beam-limiting device having multiple fixed apertures sufficient to meet the requirement for each combination of image receptor size and SID for which the unit is designed. Permanent, clearly legible markings shall indicate the image receptor size and SID for which each aperture is designed and shall indicate which aperture in position for use is in position for use.

9. Timers. Termination of exposures shall cause automatic resetting of the timer to its initial setting or to "zero."

RH-1605. Reserved.

RH-1606. Intraoral Dental Radiographic Systems. In addition to the provisions of RH-1602, the requirements of RH-1606 apply to x-ray equipment and associated facilities used for dental radiography. Requirements for extra-oral dental radiographic systems are covered in RH-1604.

a. Equipment.

1. Diaphragms, cones or position indicating devices shall be used for collimating the useful beam and shall provide the same degree of protection as the housing. The diameter of the useful beam at the end of the position indicating device shall not be more than three (3) inches.

2. A cone, spacer frame or position indicating device shall provide a source-to-skin distance of not less than seven (7) inches with equipment above 50 kVp or four (4) inches with equipment operating at 50 kVp or below.

3. The exposure control switch shall be of the dead-man type.

4. Each installation shall be provided with a protective barrier for the operator or shall be so arranged that the operator can stand at least six (6) feet from the patient and well away from the useful beam.

5. The tube head shall remain stationary when placed in exposure position.

6. An x-ray control shall be incorporated into each x-ray system such that an exposure can be terminated by the operator at any time, except for exposures of one-half second or less.

7. Timers. Means shall be provided to terminate the exposure at a preset time interval, preset product of current and time, a preset number of pulses or a preset radiation exposure to the image receptor. In addition, it shall not be possible to make an exposure when the timer is set to a "zero" or "off" position if either position is provided.

8. Exposure reproducibility. The exposure reproducibility shall meet the following requirements:

   The coefficient of variation shall not exceed 0.10 when all technique factors are held constant. This requirement shall be deemed to have been met if, when four (4) exposures are made at identical technique factors, the value of the average exposure (E) is greater than or equal to five (5) times the maximum exposure (E_{max}) minus the minimum exposure (E_{min}):

   $$\text{i.e., } E \geq 5(E_{max} - E_{min})$$

9. The x-ray control shall provide a signal audible to the operator to indicate that the exposure has terminated.

10. In addition to the requirements of RH-1602.c.5, all intraoral dental radiographic systems manufactured on and after December 1, 1980, shall have a minimum half-value layer not less than 1.5 millimeters aluminum equivalent filtration permanently installed in the useful beam.

b. Additional Requirements Applicable to Certified Systems Only.

Only diagnostic x-ray systems incorporating one or more certified component(s) shall be required to comply with the following additional requirement(s) which relate to that certified component(s).

1. Reproducibility. When the equipment is operated on an adequate power supply as specified by the manufacturer, the estimated coefficient of variation of radiation exposures shall be no greater than 0.05, for any specific combination of selected technique factors.

2. Linearity. When the equipment allows a choice of x-ray tube current settings and is operated on a power supply as specified by the manufacturer in accordance with the requirements of applicable Federal standards, for any fixed x-ray tube potential within the range of forty (40%) percent to 100 percent of the maximum rating, the average ratios of exposure to the indicated milliampere-seconds product, i.e., mR/mAs, obtained at any two (2) consecutive tube current settings shall not differ by more than 0.10 times their sum, i.e.,

$$\left| \overline{X_1} - \overline{X_2} \right| \leq 0.10(\overline{X_1} + \overline{X_2}),$$

where X_1 and X_2 are the average mR/mAs values obtained at each of two consecutive tube current settings.

3. Accuracy. Deviation of technique factors from indicated values shall not exceed the limits specified for that system by its manufacturer.

4. Timers. Termination of exposure shall cause automatic resetting of the timer to its initial - setting or to "zero."

5. Field limitation. Radiographic systems designed for use with an intra-oral image receptor shall be provided with means to limit the x-ray beam such that:

   A. If the minimum SSD is 18 centimeters or more, the x-ray field at the minimum SSD shall be containable in a circle having a diameter of no more than 7 centimeters.

   B. If the minimum SSD is less than 18 centimeters, the x-ray field at the minimum SSD shall be containable in a circle having a diameter of no more than 6 centimeters.

   C. An open ended, shielded PID shall be used. The shielding shall be equivalent to the requirements of RH-1602.b.4.

6. Source-to-skin distance. X-ray systems designed for use with an intra-oral image receptor shall be provided with means to limit source-to-skin distance, i.e., SSD, to not less than:

   A. 18 centimeters if operable above 50 kVp; or

   B. 10 centimeters if not operable above 50 kVp.

c. Operating Procedures.

1. Neither the dentist nor his/her assistant shall be permitted to hold patients or films during exposure; neither shall any individual be regularly used for this service.

2. During each exposure, the operator shall stand at least six (6) feet from the patient or behind a protective barrier.

3. Only the patient shall be in the useful beam.

4. Neither the tube housing nor the position indicating device shall be hand-held during exposure.

5. Intraoral fluoroscopic mirrors shall not be used in dental examinations.

6. The x-ray system shall be operated in such a manner that the useful beam at the patient's skin does not exceed the requirements of RH-1606.b.5.

7. Dental fluoroscopy without image intensification shall not be used.

8. Structural shielding. Dental rooms containing x-ray machines shall be provided with such primary barriers and/or secondary barriers as are necessary to assure compliance with RH-1200.

NOTE: **In many cases structural materials of ordinary walls suffice as a protective barrier without addition of special shielding material.**

RH-1607. Therapeutic X-Ray Systems of Less Than One MeV.

a. Equipment Requirements.

1. Leakage radiation. When the tube is operated at its leakage technique factors, the leakage radiation shall not exceed the value specified at the distance specified for the classification of the x-ray system.

A. Contact therapy systems. Leakage radiation shall not exceed 100 milliroentgens per hour at 5 centimeters from the surface of the tube housing assembly.

B. 0-150 kVp systems. Systems which are manufactured or installed prior to the July 1, 1983 date shall have a leakage radiation which does not exceed one (1) roentgen in one hour at one (1) meter from the source.

C. 0-150 kVp systems. Systems which are manufactured on or after July 1, 1983 shall have a leakage radiation which does not exceed 100 milliroentgens in one (1) hour at one (1) meter from the source.

D. 151 to 999 kVp systems. The leakage radiation shall not exceed one (1) roentgen in one hour at one (1) meter from the source except systems that operate in excess of 500 kVp may have a leakage radiation at one (1) meter from the source equivalent to the exposure within one hour of the useful beam at one (1) meter from the source multiplied by a factor of 0.001.

2. Permanent beam limiting devices. Permanent fixed diaphragms or cones used for limiting the useful beam shall provide the same or higher degree of protection as required by the tube housing assembly.

3. Removable and adjustable beam limiting devices.

A. Removable beam limiting devices shall, for the portion of the useful beam to be blocked by these devices, transmit not more than one (1) percent of the original x-ray beam at the maximum kilovoltage and maximum treatment filter. This requirement does not apply to auxiliary blocks or materials placed in the useful beam to shape the useful beam to the individual patient.

B. Adjustable beam limiting devices installed after July 1, 1983 shall meet the requirements of RH-1607.a.3.A.

C. Adjustable beam limiting devices installed before July 1, 1983 shall, for the portion of the x-ray beam to be blocked by these devices, transmit not more than five (5) percent of the original x-ray beam at the maximum kilovoltage and maximum treatment filter.

4. Filter system. The filter system shall be so designed that:

A. Filters cannot be accidentally displaced from the useful beam at any possible tube orientation;

B. Each filter is marked as to its material of construction and its thickness or wedge angle for wedge filters; and

C. It shall be possible for the operator to determine the presence or absence of each filter and the orientation of each wedge filter in the useful beam when the operator is at the control panel, either by display at the control panel or by direct observation.

D. The radiation at five (5) centimeters from the filter insertion slot opening does not exceed 30 roentgens per hour under any operating conditions.

5. Tube immobilization. The tube housing assembly shall be capable of being immobilized during stationary treatments.

6. Focal spot marking. The tube housing assembly shall be so marked that it is possible to determine the location of the focal spot to within five (5) millimeters and such marking shall be readily accessible for use during calibration procedures.

7. Beam block. Contact therapy tube housing assemblies shall have a removable shield of at least 0.5 millimeter lead equivalence at 100 kVp that can be positioned over the entire useful beam exit port during periods when the beam is not in use.

8. Beam monitor system. Systems of greater than 150 kVp manufactured after July 1, 1983 shall be provided with a beam monitor system which:

   A. Shall include a transmission detector which is a full beam detector and which is placed on the patient side of any fixed added filters other than a wedge filter;

   B. Shall have the detector interlocked to prevent incorrect positioning in the useful beam;

   C. Shall not allow irradiation until a pre-selected value of exposure (i.e. roentgens, rads/unit time, etc.) has been made at the treatment control panel;

   D. Shall independently terminate irradiation when the pre-selected exposure has been reached;

   E. Shall be so designed that, in the event of a system malfunction or electrical power failure, the dose administered to a patient prior to the system malfunction or power failure can be accurately determined;

   F. Shall have a display at the control panel from which the dose at the reference point in the treatment volume can be calculated;

   G. Shall have a control panel display which maintains the reading until intentionally reset to zero; and

   H. Shall have a control panel display which does not have scale multiplying factors and utilizes a design such that increasing dose is displayed by increasing numbers.

9. Timer.

   A. A timer shall be provided which has a display at the treatment control panel. The timer shall be graduated in minutes and fraction of minutes. The timer shall have a pre-set timer selector and an elapsed time indicator.

B. The timer shall be a cumulative timer which activates with the radiation and retains its reading after irradiation is interrupted or terminated. After irradiation is terminated and before irradiation can be reinitiated, it shall be necessary to cycle the pre-set time selector through zero time.

C. The timer shall terminate irradiation when pre-selected time has elapsed if any dose a monitoring system present has not previously terminated irradiation.

D. The timer shall permit accurate pre-setting and determination of exposure times as short as one (1) second.

E. The timer shall not permit an exposure if set at zero.

F. The timer shall comply with the provisions of RH-1607.a.13 where applicable.

G. The timer shall not activate until the shutter is opened when patient irradiation is controlled by a shutter mechanism.

10. Control panel functions. The control panel, in addition to the displays required in other provision of RH-1607, shall have:

A. An indication of whether electrical power is available at the control panel and if activation of the x-ray tube is possible;

B. An indication of whether x-rays are being produced;

C. Means for indicating kV and x-ray tube current;

D. The means for terminating an exposure at any time;

E. A locking device which will prevent unauthorized use of the x-ray system; and

F. For x-ray equipment manufactured after July 1, 1983, a positive display of specific filter(s) in the beam.

11. Multiple tubes. When a control panel may energize more than one x-ray tube:

    A. It shall be possible to activate only one x-ray tube during any time interval;

    B. There shall be an indication at the control panel identifying which x-ray tube is energized; and

    C. There shall be an indication at the tube housing assembly when that tube is energized.

12. Source-to-patient distance. There shall be means of determining the source-to-patient distance to within one (1) centimeter.

13. Shutters. Unless it is possible to bring the x-ray output to the prescribed exposure parameters within five (5) seconds, the entire useful beam shall be automatically attenuated by a shutter having a lead equivalency not less than that of the tube housing assembly. In addition,

    A. After the unit is at operating parameters, the shutter shall be controlled electrically by the operator from the control panel; and

    B. An indication of shutter position shall appear at the control panel.

14. Low filtration x-ray tubes. Each x-ray system equipped with a beryllium or other low-filtration window shall be clearly labeled as such upon the tube housing assembly and at the control panel.

b. Facility Design Requirements for Systems Capable of Operating Above 50 kVp. In addition to shielding adequate to meet requirements of Section 2 and Section 3, the treatment room shall meet the following design requirements:

1. Warning lights. Treatment rooms to which access is possible through more than one entrance shall be provided with warning lights, in a readily observable position near the outside of all access doors, which will indicate when the useful beam is "on".

2. Voice communication. Provision shall be made for two-way aural communication between the patient and the operator at the control panel; however, where excessive noise levels make aural communication impractical, other methods of communication shall be used.

3. Viewing systems. Windows, mirrors or closed-circuit television or an equivalent system shall be provided to permit continuous observation of the patient during irradiation and shall be so located that the operator can observe the patient from the control panel. When the primary viewing system is by electronic means (e.g., television), an alternate viewing system shall be available for use in the event of electronic failure.

4. Additional requirements for x-ray systems capable of operation above 150 kVp.

   A. All protective barriers shall be fixed except for entrance doors or beam interceptors.

   B. The control panel shall be outside the treatment room;

   C. All doors of the treatment room shall be electrically connected to the control panel such that x-ray production cannot occur unless all doors are closed;

   D. If the radiation beam is interrupted by any door opening, it shall not be possible to restore the machine to operation without closing the door and reinitiating irradiation by manual action at the control panel.

   E. When any door is opened while the x-ray tube is activated, the exposure at a distance of one (1) meter from the source shall be reduced to less than 100 milliroentgens per hour within one (1) second.

   F. After the radiation output of the x-ray tube has been affected by the opening of any door referred to in RH-1607.b.4.C, it shall be possible to restore the x-ray system to full operation only upon:

      i. closing the door; and subsequently,

      ii. reinitiating the exposure at the control panel.

RH-1607. (Cont'd)

c. Surveys, Calibrations, Spot Checks and Operating Procedures.

1. Surveys.

A. All new facilities and existing facilities not previously surveyed, shall have a survey made by or under the direction of, a qualified expert. Such surveys shall also be done after any change in the facility or equipment which might cause a significant increase in radiation hazard.

B. The registrant shall obtain a written report of the survey from the qualified expert and a copy of the report shall be transmitted by the registrant to the Department within thirty (30) days of receipt of the report.

C. The survey and report shall indicate all instances where the installation, in the opinion of the qualified expert, is in violation of applicable regulations and shall cite all items of noncompliance.

2. Calibrations.

A. The calibration of an x-ray system shall be performed at intervals not to exceed one (1) year and after any change or replacement of components which could cause a change in the radiation output

.

B. The calibration of the radiation output of the x-ray system shall be performed by or under the direction of a qualified expert who is physically present at the facility during such calibration.

C. Calibration of the radiation output of an x-ray system shall be performed with a calibrated instrument. The calibration of such instrument shall be directly traceable to a national standard. The instrument shall have been calibrated within the preceding two (2) years.

D. The calibrations made pursuant to RH-1607.c.2 shall be such that the dose at a reference point in soft tissue can be calculated to within five (5) percent.

E. The calibration of the x-ray system shall include, but not be limited to, the following determinations:

i. Verification that the x-ray system is operating in compliance with the design specifications;

ii. The exposure rates for each combination of field size technique factors, filter and treatment distance used;

iii. The degree of congruence between the radiation field and the field indicated by the localizing device if such device is present; and

iv. An evaluation of the uniformity of the radiation field symmetry for the field sizes used and any dependence upon tube housing assembly orientation.

F. Records of calibration performed pursuant to RH-1607.c.2 shall be maintained by the registrant for five (5) years after completion of the calibration.

G. A copy of the most recent x-ray system calibration shall be available for use by the operator at the control panel.

3. Spot checks. Spot checks shall be performed on x-ray systems capable of operation at greater than 150 kVp. Such spot checks shall meet the following requirements:

A. The spot check procedures shall be in writing and shall have been developed by a qualified expert. A copy shall be submitted to the Department prior to its implementation.

B. If a qualified expert does not perform the spot-check measurement, the results of the spot-check measurements shall be reviewed by a qualified expert within fifteen (15) days.

C. The measurements taken during the spot checks shall demonstrate the degree of consistency of the operating characteristics which can affect the radiation output of the x-ray system.

D. The spot check procedure shall specify the frequency at which tests or measurements are to be performed and the acceptable tolerance for each parameter measured in the spot check when compared to the value for that parameter determined in the calibration specified in RH-1607.c.2.

E. The cause for a parameter exceeding a tolerance set by the qualified expert shall be investigated and corrected before the system is used for patient irradiation.

F. The procedure shall also note conditions which shall require that the system be recalibrated in accordance with RH-1607.c.2.

G. Records of spot check measurements performed pursuant to RH-1607.c.3 shall be maintained by the registrant for two (2) years following such measurement.

H. Where a spot check involves a radiation measurement, such measurement shall be obtained using a system satisfying the requirements of RH-1607.c.2 or which has been inter-compared with a system meeting those requirements within the previous year.

4. Operation procedures.

A. Therapeutic x-ray systems shall not be left unattended unless the system is secured pursuant to RH-1607.a.10.E.

B. When a patient must be held in position for radiation therapy, mechanical supporting or restraining devices shall be used.

C. The tube housing assembly shall not be held by an individual during exposures unless the system is designed to require such holding and the peak tube potential of the system does not exceed 50 kVp. In such cases, the holder shall wear protective gloves and apron of not less than 0.5 mm lead equivalency at 100 kVp.

D. No individual other than the patient shall be in the treatment room unless such individual is protected by a barrier sufficient to meet the requirements of RH-1200. No individual other than the patient shall be in the treatment room during exposures when the kVp exceeds 150.

RH-1607. (Cont'd)

E. The x-ray system shall not be used in the administration of radiation therapy unless the requirements of RH-1607.c.2 and RH-1507.c.3.D have been met.

RH-1608. X-Ray and Electron Therapy Systems with Energies of One MeV and Above. Section 6 shall apply to medical facilities using therapy systems with energies one MeV and above.

a. Definitions. In addition to the definitions provided in RH-1601, the following definitions shall be applicable to RH-1608.

1. Applicator - A structure which indicates the extent of the treatment field at a given distance from the virtual source and which may or may not incorporate the beam limiting device.

2. Beam scattering filter - A filter used in order to scatter a beam of electrons.

3. Central axis of the beam - A line passing through the virtual source and the center of the plane figure formed by the edge of the final beam limiting device.

4. Depth dose - The absorbed dose at a specified depth in a phantom.

5. Dose monitoring system - A system of devices for the detection and display of quantities of radiation.

6. Dose monitor unit - A unit from which the absorbed dose can be calculated.

7. Existing equipment - Therapy systems subject to RH-1608 which were manufactured before the effective date of these Regulations.

8. Field flattening filter - A filter used to homogenize the dose rate over the area of a useful beam of x-rays.

9. Field size - The dimensions along the major axes of an area in a plane perpendicular to the specified direction of the beam of incident radiation at the normal treatment distance and defined by the intersection of the major axes and the fifty (50%) percent isodose line. Material shall be placed in the beam such that dose maximum is produced at the normal treatment distance when field size is being determined.

10. Gantry - The part of the system supporting and allowing possible movements of the radiation head.

11. Interruption of irradiation - The stopping of irradiation with the possibility of continuing irradiation without resetting of operating conditions at the control panel.

12. Isocenter - A fixed point in space located at the intersection of the rotation axes of the principal movements of the therapy system.

13. Moving beam therapy - Radiation therapy with relative displacement of the useful beam and the patient during irradiation. This includes arc therapy, skip therapy and rotational therapy.

14. New equipment - Systems subject to RH-1608 which were manufactured after the effective date of these Regulations.

15. Normal treatment distance:

    i. For electron irradiation, this distance is the virtual source to surface distance along the central axis of the useful beam as specified by the manufacturer for the applicator.

    ii. For x-ray irradiation this distance is the virtual source to isocenter distance along the central axis of the useful beam. For non-isocentric equipment this distance shall be that specified by the manufacturer.

16. Patient - An individual subjected to examination and treatment.

17. Phantom - A volume of material behaving in a manner similar to tissue with respect to the attenuation and scattering of radiation.

18. Primary dose monitoring system - A system which will monitor the quantity of radiation produced during irradiation and which will terminate irradiation when a pre-selected number of dose monitor units have been acquired.

19. Radiation treatment prescription - The absorbed dose which is intended to be delivered to the treatment volume.

20. Radiation head - The structure from which the useful beam emerges.

21. Redundant dose monitoring combination - A combination of two dose monitoring systems in which both systems are arranged to terminate irradiation in accordance with a pre-selected number of dose monitor units.

22. Secondary dose monitoring system - A system which will terminate irradiation in the event of failure of the primary system.

23. Shadow tray - A device attached to the radiation head to support auxiliary beam limiting material.

24. Spot check - A procedure which is performed to assure that a previous calibration continues to be valid.

25. Stationary beam therapy - Radiation therapy without relative displacement of the useful beam and the patient during irradiation.

26. Target - The part of a radiation head which intercepts a beam of accelerated particles with subsequent emission of other radiation.

27. Termination of irradiation - The stopping of irradiation in a fashion which will not permit continuance of irradiation without the resetting of operating conditions at the control panel.

28. Treatment field - The area of the patient's skin which is to be irradiated.

29. Virtual source - A point from which radiation appears to originate.

b. Requirements for Equipment.

1. Leakage radiation inside patient area.

A. New equipment shall meet the following requirements:

i. For all operating conditions, the dose in rads (grays) due to leakage radiation, including x-rays, electrons and neutrons, at any point in a circular plane of two (2) meters radius centered on a perpendicular to the central axis of the beam at the normal treatment distance and outside the maximum useful beam,

shall not exceed 0.1 percent of the maximum dose in rads (grays) of the un-attenuated useful beam measured at the point of intersection of the central axis of the beam and the plane surface. Measurements excluding those for neutrons shall be averaged over an area up to but not exceeding 100 square centimeters at the positions specified. Measurements of the portion of the leakage radiation dose contributed by neutrons shall be averaged over an area up to but not exceeding 200 square centimeters.

ii. For each system the licensee shall determine or obtain from the manufacturer, the leakage radiation existing at the positions specified in RH-1608.b.1.A.i for specified operating conditions. Records on leakage radiation shall be maintained at the installation for inspection by the Department.

B. Existing equipment shall meet the following requirements:

i The leakage radiation, excluding neutrons, at any point in the area specified by RH-1608.b.1.A.i where such area intercepts the central axis of the beam one (1) meter from the virtual source, shall not exceed 0.1 percent of the maximum dose in rads of the un-attenuated useful beam measured at the point of intersection of the central axis of the beam and the circular plane specified in RH-1608.b.1.A.i.

ii. For each system, the licensee shall determine, or obtain from the manufacturer, the leakage radiation existing at the positions specified in RH-1608.b.1.B.i for specified operating conditions. Records on radiation leakage shall be maintained at the installation for inspection by the Department.

2. Leakage radiation outside the patient area.

   A. The dose equivalent in rem due to leakage radiation, except in the area specified in RH-1608.b.1.A.i, when measured at any point one (1) meter from the path of the charged particle, before the charged particle strikes the target or window, shall not exceed 0.1 percent for x-ray leakage nor 0.5 percent for neutron leakage of the maximum dose equivalent in rem of the un-attenuated useful beam measured at the point of intersection of the central axis of the beam and the circular plane specified in RH-1608.b.1.A.i.

   B. The licensee shall determine or obtain from the manufacturer, the actual leakage radiation existing at the positions specified in RH-1608.b.2.A for specified operating conditions. Measurements, excluding neutrons, shall be averaged over an area up to but not exceeding 100 square centimeters at the positions specified. Neutron measurements shall be averaged over an area up to but not exceeding 200 square centimeters.

3. Beam limiting devices. Adjustable or interchangeable beam limiting devices shall be provided and such devices shall transmit no more than two (2) percent of the useful beam for the portion of the useful beam which is to be attenuated by the beam limiting device. The neutron component of the useful beam shall not be included in this requirement. Measurements shall be averaged over an area up to but not exceeding 100 square centimeters at the normal treatment distance.

4. Filters.

   A. If the absorbed dose rate information required by RH-1608.b.16 related exclusively to operation with a field flattening or beam scattering filter in place, such filter shall be removable only by the use of tools.

   B. In systems which utilize a system of wedge filters, interchangeable field flattening or interchangeable beam scattering filters:

      i. Irradiation shall not be possible until a selection of a filter has been made at the treatment control panel;

ii. An interlock system shall be provided to prevent irradiation if the filter selected is not in the correct position;

iii. An indication of the wedge filter orientation with respect to the treatment field shall be provided at the control panel, by direct observation or by electronic means, when wedge filters are used;

iv. A display shall be provided at the treatment control panel showing the filter(s) in use;

v. Each filter which is removable from the system shall be clearly marked with an identification number. Documentation available at the control panel shall contain a description of the filter. For wedge filters, the wedge angle shall appear on the wedge or wedge tray.

vi. An interlock shall be provided to prevent irradiation if any filter selection operation carried out in the treatment room does not agree with the filter selection operation carried out at the treatment control panel.

5. Beam quality. The licensee shall determine or obtain from the manufacturer, data sufficient to assure that the following beam quality requirements are met:

A. The absorbed dose resulting from x-rays in a useful electron beam at a point on the central axis of the beam ten (10) centimeters greater than the practical range of the electrons shall not exceed the values stated in Table III. Linear interpolation shall be used for values not stated.

TABLE III

Maximum Energy of Electron Beam in MeV	X-ray Absorbed Dose as a Fraction of Maximum Absorbed Dose
1	0.03
15	0.05
35	0.10
50	0.20

B. Compliance with RH-1608.b.5.A shall be determined using:

i. A measurement within a phantom with the incident surface of the phantom at the normal treatment distance and normal to the central axis of the beam;

ii. The largest field size available which does not exceed 15 centimeters by 15 centimeters; and

iii. A phantom whose cross-sectional dimensions exceed the measurement radiation field by at least five (5) centimeters and whose depth is sufficient to perform the required measurement.

C. The absorbed dose at a surface located at the normal treatment distance, at the point of intersection of that surface with the central axis of the useful beam during x-ray irradiation, shall not exceed the limits stated in Table IV. Linear interpolation shall be used for values not stated.

TABLE IV

Maximum Photon Energy in MeV	Absorbed Dose at the Surface as a Fraction of the Maximum Absorbed Dose
1	0.80
2	0.70
5	0.60
15	0.50
35	0.40
50	0.20

D. Compliance with RH-1608.b.5.C shall be determined by:

i. Measurements made within a phantom using an instrument which will allow extrapolation to the surface absorbed dose;

ii. Use of a phantom whose size and placement meet the requirements of RH-1608.b.5.B;

iii. Removal of all beam modifying devices which can be removed without the use of tools, except for beam scattering or beam flattening filters; and

iv. The largest field size available which does not exceed 15 centimeters by 15 centimeters.

E. The licensee shall determine or obtain from the manufacturer the maximum percentage absorbed dose in the useful beam due to neutrons, excluding stray neutron radiation, for specified operating conditions.

6. Beam monitors. All therapy systems shall be provided with radiation detectors in the radiation head.

A. New equipment shall be provided with at least two radiation detectors. The detectors shall be incorporated into two monitoring systems arranged either as a primary/primary combination or as a primary/secondary combination.

B. Existing equipment shall be provided with at least one radiation detector. This detector shall be incorporated into a primary system.

C. The detectors and system into which the detector is incorporated shall meet the following requirements:

i. Each primary system shall have a detector which is a transmission detector and a full beam detector and which is placed on the patient side of any fixed added filters other than a wedge filter.

ii. The detectors shall be removable only with tools and shall be interlocked to prevent incorrect positioning.

iii. Each detector shall be capable of independently monitoring and controlling the useful beam.

iv. Each detector shall form part of a dose monitoring system from whose readings in dose monitor units the absorbed dose at a reference point in the treatment volume can be calculated.

v. For new equipment the design of the dose monitoring systems of RH-1608.b.6.C.iv shall assure that the malfunctioning of one system shall not affect the correct functioning of the second system. In addition:

(a). The failure of any element which may be common to both systems shall terminate the useful beam.

(b). The failure of any element common to both systems which could affect the correct function of both systems shall terminate irradiation.

vi. Each dose monitoring system shall have a legible display at the treatment control panel. Each display shall:

(a). Maintain a reading until intentionally reset to zero;

(b). Have only one scale and no scale multiplying factors in new equipment; and

(c). Utilize a design such that increasing dose is displayed by increasing numbers and shall also be so designed that, in the event of an over-dosage of radiation, the absorbed dose may be accurately determined under all normal conditions of use or foreseeable failures.

vii. In the event of power failure, the dose monitoring information required in RH-1608.b.6.C.vi displayed at the control panel at the time of failure shall be retrievable in at least one system for a twenty (20) minute period of time.

7. Beam symmetry.

A. In new equipment inherently capable of producing useful beams with asymmetry exceeding five (5) percent, at least four (4) different parts of the radiation beam shall be monitored before the beam passes through the beam limiting device and facilities shall be provided so that if the difference in dose rate between any two of these different parts exceeds five (5) percent an indication of this condition is made at the control panel and so that if the difference in dose rates between any two (2) of these different parts exceeds twenty (20%) percent the irradiation is terminated.

B. Beam symmetry requirements of RH-1608.a.7. A shall be met if the user can demonstrate to the satisfaction of the Department that adequate fail-safe protection against the beam asymmetry is incorporated into the inherent design of the accelerator.

C. On existing equipment where the Department has determined that beam symmetry is inadequate, the use of an automatic beam asymmetry warning system may be required.

8. Selection and display of dose monitor units.

A. Irradiation shall not be possible until a selection of a number of dose monitor units has been made at the treatment control panel.

B. After useful beam termination, it shall be necessary to manually reset the pre-selected dose monitor units before treatment can be reinitiated.

C. The pre-selected number of dose monitor units shall be displayed at the treatment control panel until reset manually for the next irradiation.

D. After termination of irradiation, it shall be necessary to reset the dosimeter display to zero before subsequent treatment can be initiated.

9. Termination of irradiation by the dose monitoring system.

A. Each of the required monitoring systems shall be capable of independently terminating irradiation. Provisions shall be made to test the correct operation of each system.

B. Each primary system shall terminate irradiation when the pre-selected number of dose monitor units has been detected by the system.

C. If original design of the equipment included a second dose monitoring system, that system shall be capable of terminating irradiation when not more than 40 dose monitor units above the pre-selected number of dose monitor units set at the control panel has been detected by the second dose monitoring system.

D. For new equipment a second dose monitoring system shall be present. That system shall be capable of terminating irradiation when not more than ten (10%) percent or 25 dose monitor units above the pre-selected number of dose monitor units set at the control panel has been detected by the second dose monitor system.

E. For new equipment an indicator on the control panel shall show which dose monitoring system has terminated irradiation.

10. Interruption switches. It shall be possible to interrupt irradiation and equipment movements at any time from the operator's position at the treatment control panel. Following an interruption, it shall be possible to restart irradiation by operator action without any reselection of operating conditions. If any change is made of a pre-selected value during an interruption the equipment shall go to termination condition.

11. Termination switches. It shall be possible to terminate irradiation and equipment movements or go from an interruption condition to termination condition, at any time from the operator's position at the treatment control panel.

12. Timer.

A. A timer shall be provided which has a display at the treatment control panel. The timer shall be graduated in minutes and decimals of minutes. The timer shall have a pre-set time selector and an elapsed time indicator.

B. The timer shall be a cumulative timer which switches on and off with the radiation and retains its reading after irradiation is interrupted or terminated. It shall be necessary to zero and subsequently reset the elapsed time indicator and the pre-set time selector after irradiation is terminated before irradiation shall again be possible.

C. The timer shall terminate irradiation with a pre-selected time has elapsed if the dose monitoring systems fail to do so.

13. Selection of radiation type. Equipment capable of both X-ray therapy and electron therapy shall meet the following requirements:

A. Irradiation shall not be possible until a selection of radiation type has been made at the treatment control panel.

B. An interlock system shall be provided to insure that the equipment can emit only the radiation type which has been selected.

C. An interlock system shall be provided to prevent irradiation if any selected operations carried out in the treatment room do not agree with the selected operations carried out at the treatment control panel.

D. An interlock system shall be provided to prevent irradiation with x-rays when electron applicators are fitted and irradiation with electrons when accessories specific for x-ray therapy are fitted.

E. The radiation type selected shall be displayed at the treatment control panel before and during irradiation.

14. Selection of energy. Equipment capable of generating radiation beams of different energies shall meet the following requirements:

A. Irradiation shall not be possible until a selection of energy has been made at the treatment control panel.

B. An interlock system shall be provided to insure that the equipment can emit only the energy of radiation which has been selected.

C. An interlock system shall be provided to prevent irradiation if any selected operations carried out in the treatment room do not agree with the selected operations carried out at the treatment control panel.

D. The energy selected shall be displayed at the treatment control panel before and during irradiation.

E. For new equipment, an interlock system shall be provided to terminate irradiation if the energy of the electrons striking the x-ray target or electron window deviates by more than + 20% or + 3 MeV, whichever is smaller, from the selected nominal energy.

15. Selection of stationary beam therapy or moving beam therapy. Equipment capable of both stationary beam therapy and moving beam therapy shall meet the following requirements:

A. Irradiation shall not be possible until a selection of stationary beam therapy or moving beam therapy has been made at the treatment control panel.

B. An interlock system shall be provided to insure that the equipment can operate only in the mode which has been selected.

C. An interlock system shall be provided to prevent irradiation if any selected operations carried out in the treatment room do not agree with the selected operations carried out at the treatment control panel.

D. An interlock system shall be provided to terminate irradiation if the movement stops during moving beam therapy.

E. The mode of operation shall be displayed at the treatment control panel.

F. For new equipment, an interlock system shall be provided to terminate irradiation if:

i. Movement of the gantry occurs during stationary beam therapy; or

ii. Movement of the gantry stops during moving beam therapy unless such stoppage is a preplanned function.

G. Moving beam therapy shall be controlled to obtain the selected relationships between incremental dose monitor units and incremental angle of movement.

i. For new equipment, an interlock system shall be provided to terminate irradiation if the number of dose monitor units delivered in any 10 degrees of arc differs by more than twenty (20%) percent from the selected value.

ii. For new equipment, where gantry angle terminates the irradiation in arc therapy, the dose monitor units shall differ by less than five (5) percent from the value calculated from the absorbed dose per unit angle relationship.

H. Where the dose monitor system terminates the irradiation in arc therapy, the termination of irradiation shall be as required by RH-1608.b.9.

16. Absorbed dose rate. For new equipment, a system shall be provided from whose readings the absorbed dose rate at a reference point in the treatment volume can be calculated.[12/] In addition:

A. The quotient of the number of dose monitor units by time shall be displayed at the treatment control panel.

B. If the equipment can deliver under any conditions an absorbed dose rate at the normal treatment distance more than twice the maximum value specified by the manufacturer's anticipated dose rate for any machine parameters utilized, a device shall be provided which terminates irradiation when the absorbed dose rate exceeds a value twice the specified maximum. The value at which the irradiation will be terminated shall be a record maintained by the licensee.

17. Location of focal spot and beam orientation. The licensee shall determine, or obtain from the manufacturer, the location with reference to an accessible point on the radiation head of:

A. The x-ray target or the virtual source of x-rays.

B. The electron window or the scattering foil.

C. All possible orientations of the useful beam.

18. System checking facilities. Capabilities shall be provided so that all radiation safety interlocks can be checked. When pre-selection of any of the operating conditions requires action in the treatment room and/or at the treatment control panel, selection at one location shall not give a display at the other location until the requisite selected operations in both locations have been completed.

19. Shadow trays shall be designed such that the skin entrance dose due to electrons produced within the shadow tray are minimized.

c. Facility and Shielding Requirements. In addition to Section 3, the following design requirements shall apply:

1. Except for entrance doors or beam interceptors, all the required barriers shall be fixed barriers.

2. The treatment control panel shall be located outside the treatment room.

3. Windows, mirrors, close-circuit television, or other equivalent viewing systems shall be provided to permit continuous observation of the patient during irradiation and shall be so located that the operator may observe the patient from the treatment control panel. When the viewing system is by electronic means (e.g., television), an alternate viewing system shall be provided for use in the event of failure of the primary system.

4. Provision shall be made for two-way aural communication between the patient and the operator at the treatment control panel. However, where excessive noise levels makes aural communications impractical, other methods of communications shall be used.

5. Treatment rooms to which access is possible through more than one entrance shall be provided with warning lights, which will indicate when the useful beam is "on" in a readily observable position near the outside of all access doors.

6. Interlocks shall be provided such that all entrance doors shall be closed before treatment can be initiated or continued. If the radiation beam is interrupted by any door opening, it shall be possible to restore the machine to operation only by closing the door and reinitiating exposure by manual action at the control panel.

7. A. A licensee shall install in each treatment room a permanent radiation monitor capable of continuously monitoring beam status.

B. Each radiation monitor must be capable of providing visible notice of a therapy unit malfunction that results in failure to terminate the useful beam. The visible indicator of high radiation levels must be observable by an individual entering the treatment room.

C. Each radiation monitor must be equipped with an emergency power supply separate from the power supply to the therapy unit. This emergency power supply may be a battery system.

D. Each radiation monitor must be checked for proper operation each day before the therapy unit is used for treatment of patients.

E. A licensee shall maintain a record of the check required by Paragraph D of this Section for two (2) years. The record must include the date of the check, notation that the monitor indicates when the useful beam is "off" and "on" and the initials of the individual who performed the check.

F. If a radiation monitor is inoperable for any reason, the licensee shall require any individual entering the treatment room to use a survey instrument or audible alarm personal dosimeter to monitor for any malfunction of the unit that may result in failure to terminate the useful beam. The instrument or dosimeter must be checked for proper operation at the beginning of each day of use.

G. A licensee shall promptly repair or replace the radiation monitor if it is inoperable.

d. Surveys, Calibrations, Spot Checks, and Operating Procedures.

1. Survey.

A. All new facilities and existing facilities not previously surveyed, shall have a survey made by, or under the direction of, a qualified expert. Such surveys shall also be done after any change in the facility or equipment which might cause a significant increase in radiation hazard.

B. The licensee shall obtain a written report of the survey from the qualified expert and a copy of the report shall be transmitted by the licensee to the Department within thirty (30) days of receipt of the report.

C. The survey and report shall indicate all instances where the installation, in the opinion of the qualified expert, is in violation of applicable regulations and shall cite the Section violated.

2. Calibrations.

A. The full calibration of systems subject to RH-1608 shall be performed in accordance with an established calibration protocol[13/] before the system is first used for irradiation of a patient and thereafter at time intervals which do not exceed twenty (12) months and after any change which might significantly alter the calibration, spatial distribution or other characteristics of the therapy beam.

B. The full calibration shall be performed under the direct supervision of a qualified expert.

C. Calibration of the dose equivalent of the therapy beam shall be performed with a dosimeter system.

i. Having a calibration factor for Cobalt-60 gamma rays traceable to a national standard;

ii. Which has been calibrated within the previous two years and after any servicing that may have affected its calibration;

iii. Which has been calibrated in such a fashion that an uncertainty can be stated for the radiation quantities monitored by the system; and

iv. Which has had constancy checks performed on the system as specified by a radiological physicist.

D. Calibrations made pursuant to RH-1608.d.2 shall be such that the dose at a reference point in soft tissue can be calculated with $\pm$ 5 percent.

E. The calibration of the therapy beam shall include but not be limited to the following determinations:

i. Verification that the equipment is operating in compliance with the design specifications concerning the light localizer, the side light and back-pointer alignment with the isocenter, when applicable, variation in the axis of rotation for the table, gantry and jaw system and beam flatness and symmetry at specified depths.

ii. The absorbed dose rate at various depths of water for the range of field sizes used, for each effective energy, that will verify the accuracy of the dosimetry of all therapy procedures utilized with that therapy beam.

iii. The congruence between the radiation field and the field indicated by the localizing device.

iv. The uniformity of the radiation field and its dependency upon the direction of the useful beam.

v. The calibration determinations above shall be provided in sufficient detail such that the absorbed dose to tissue in the useful beam may be calculated to within ± 5 percent.

vi. Verification of depth-dose data and isodose curves applicable to the specific machine continue to be valid or are updated to existing machine conditions.

vii. Verification of the applicability of transmission factors of all accessories such as wedges, shadow trays, compensators; and their effects on electron buildup.

F. Records of the calibration performed pursuant to RH-1608.d.2.A shall be maintained by the licensee for five (5) years after completion of the calibration.

G. A copy of the latest calibration performed pursuant to RH-1608.d.2.A shall be available for use by the operator at the treatment control panel.

3. Spot checks. Spot checks shall be performed on systems subject to RH-1608 during full calibrations and thereafter at intervals not to exceed one (1) month.

NOTE: Spot checks shall include absorbed dose measurements at a minimum of two (2) depths in a phantom at intervals not to exceed one (1) month. Such spot checks shall meet the following requirements:

A. The spot check procedures shall be in writing and shall have been developed by a qualified expert. A copy of the procedure shall be submitted to the Department prior to its implementation.

B. The measurements taken during spot checks shall demonstrate the degree of consistency of the operating characteristics which can affect the radiation output of the system or the radiation delivered to a patient during a therapy procedure.

C. If a qualified expert does not perform the spot-check measurements, these measurements shall be reviewed by a qualified expert within fifteen (15) days.

D. The spot check procedures shall specify the acceptable tolerance for each parameter measured in the spot check when compared to the value for that parameter determined in the full calibration.

E. For systems in which beam quality can vary significantly, spot checks shall include quality checks.

F. Where a system has built-in devices which provide a measurement of any parameter during irradiation, such measurement shall not be utilized as a spot check measurement.

G. Where a system has built-in devices which provide a self-check of any parameter during irradiation, the spot check procedures shall require that the parameter be independently verified at specific time intervals.

H. The reasons for spot checks which are erratic or inconsistent with calibration data shall be promptly investigated and corrected before the system is used for patient irradiation.

I. Whenever a spot check indicates a significant change, as specified in the qualified expert's spot check procedures, in the operating characteristics of a system, the system shall be recalibrated as required in RH-1608.d.2.

J. Records of spot-check measurements performed pursuant to RH-1608.d.3 shall be maintained by the licensee for a period of two (2) years.

K. Where a spot check involves a radiation measurement, such measurement shall be obtained using an instrument satisfying the requirements of RH-1608.d.2.C or which as been inter-compared with an instrument meeting those requirements within the previous year.

4. Operating procedures.

A. No individual other than the patient shall be in the treatment room during treatment of a patient.

B. If a patient must be held in position during treatment, mechanical supporting or restraining devices shall be used.

C. The system shall not be used in the administration radiation therapy unless RH-1608.d.1, 2 and 3 have been met.

RH-1609. Veterinary Medicine Radiographic Installations.

a. Equipment.

1. Leakage radiation from the diagnostic source assembly. The leakage radiation from the diagnostic source assembly measured at a distance of one (1) meter in any direction from the source shall not exceed 100 milliroentgens in one hour when the x-ray tube is operated at its leakage technique factors. Compliance shall be determined by measurements averaged over an area of 100 square centimeters with no linear dimension greater than 20 centimeters.

2. Beam limitation. All provisions of RH-1604.a (1-3) apply.

3. A device shall be provided to terminate the exposure after a pre-set time or exposure.

4. A dead-man type of exposure switch shall be provided, together with an electrical cord of sufficient length so that the operator can stand out of the useful beam and at least six (6) feet from the animal during all x-ray exposures.

b. Operating procedures.

1. The operator shall stand well away from the tube housing and the animal during radiographic exposures. The operator shall not stand in the useful beam. If film must be held, it shall be held by individuals not occupationally exposed to radiation. Hand-held fluoroscopic screens shall not be used. The tube housing shall not be held by the operator. No individuals other than the operator shall be in the x-ray room while exposures are being made unless such person's assistance is required.

2. In any application in which the operator is not located behind a protective barrier, clothing consisting of a protective apron having a lead equivalent of not less than 0.5 millimeter shall be worn by the operator and any other individuals in the room during exposures.

3. No individual shall be regularly employed to hold or support animals during radiation exposures. Operation personnel shall not perform this service except in cases in which no other method is available. If the animal must be held by an individual, the individuals shall be protected with appropriate shielding devices, such as protective gloves and apron, with a lead equivalent of not less than 0.5 millimeter and they shall be so positioned that no part of the body will be struck by the useful beam. The exposure of any individual used for this purpose shall be monitored.

RH-1610. Mammography Systems

a. Definitions

1. Accreditation body or body means an entity that has been approved by FDA accredit mammography facilities.

2. Action limits or action levels means the minimum and maximum values of a quality assurance measurement that can be interpreted as representing acceptable performance with respect to the parameter being tested. Values less than the minimum or greater than the maximum action limit or level indicate that corrective action must be taken by the facility. Action limits or levels are also sometimes called control limits or levels.

3. Air kerma means kerma in a given mass of air. The unit used to measure the quantity of air kerma is the Gray (Gy). For x-rays with energies less than 300 kiloelectronvolts (keV), 1 Gy = 100 rad. In air, 1 Gy of absorbed dose is delivered by 114 roentgens (R) of exposure.

4. Breast implant means a prosthetic device implanted in the breast.

5. Calendar quarter means any one of the following time periods during a given year: January 1 through March 31, April 1 through June 30, July 1 through September 30, or October 1 through December 31.

6. Category I means medical educational activities that have been designed as Category I by the Accreditation Council for Continuing Medical Education (ACCME), the American Osteopathic Association (AOA), a state medical society, or an equivalent organization.

7. Certificate means the certificate described in 21 CFR Part 900 the Quality Mammography Standards; Final Rule section 900.11(a).

8. Certification means the process of approval of a facility by FDA to provide mammography services.

9. Clinical image means a mammogram.

10. Consumer means an individual who chooses to comment or complain in reference to a mammography examination, including the patient or representative of the patient (e.g., family member or referring physician).

11. Continuing education unit or continuing education credit means one contact hour of training of training.

12. Contact hour means an hour of training received through direct instruction.

13. Diagnostic Mammography - A problem solving radiographic procedure of higher intensity than screening mammography provided to women who are suspected to have breast pathology. Patients are usually referred for analyses of palpable abnormalities or for further evaluation of mammographically detected abnormalities. All images are immediately reviewed by the physicians interpreting the study, and additional views are obtained as needed. Physical examinations of the breast by the interpreting physician to correlate the radiologic findings is often performed as part of the study.

14. Direct instruction means Face-to-face interaction between instructor(s) and student(s), as when the instructor provides a lecture, conducts demonstrations, or reviews student performance; or the administration and correction of student examinations by an instructor(s) with subsequent feedback to the student(s).

15. Direct Supervision of Interpreting Physicians means that: During joint interpretation of mammograms, the supervising interpreting physician reviews, discusses, and confirms the diagnosis of the physician being supervised and signs the resulting report before it is entered into the patient's records.

16. Direct Supervision of Radiologic Technologists means that: during the performance of a mammography examination or survey of the facility's equipment and quality assurance program, the supervisor is present to observe and correct, as needed, the performance of the individual being supervised who is performing the examination or conducting the survey.

17. Established operating level means the value of a particular quality assurance parameter that has been established as an acceptable normal level by the facility's quality assurance program.

18. Facility means a hospital, outpatient department, clinic, radiology practice, mobile unit, office of a physician, or other facility that conducts mammography activities, including the following: Operation of equipment to produce a mammogram, processing of the mammogram, initial interpretation of the mammogram, and maintaining viewing conditions for the interpretation. This term does not include a facility of the Department of Veterans Affairs.

19. FDA means the Food and Drug Administration.

20. First allowable time means the earliest time a resident physician is eligible to take the diagnostic radiology boards from an FDA-designated certifying body. The "first allowable time" may vary with the certifying body.

21. Interim regulations means the regulations entitled "Requirements for Accrediting Bodies of Mammography Facilities" (58 FR 67558-67565), published by FDA on December 21, 1993, and amended on September 30, 1994 (59 FR 49808-49813). These regulations established the standards that had to be met by mammography facilities in order to lawfully operate between October 1, 1994, and April 28, 1999.

22. Interpreting physician means a licensed physician who interprets mammograms and who meets the requirements set forth in 21 CFR Part 900 the Quality Mammography Standards; Final rule section 900.12(a)(1).

23. Kerma means the sum of the initial energies of all the charged particles liberated by uncharged ionizing particles in a material of given mass.

24. Laterality means the designation of either the right or left breast.

25. Lead interpreting physician means the interpreting physician assigned the general responsibility for ensuring that a facility's quality assurance program meets all of the requirements of 21 CFR Parts 16 and 900 the Quality Mammography Standards; Final Rule section 900.12(d) through (f). The administrative title and other supervisory responsibilities of the individual, if any, are left to the discretion of the facility.

26. Mammogram means a radiographic image produced through mammography.

27. Mammographic Modality means a technology, within the scope of 42 U.S.C. 263b, for radiography of the breast. Examples are screen-film mammography and digital mammography.

28. Mammography means radiography of the breast but for the purposes of this part, does not include: radiography of the breast performed during invasive interventions for localization or biopsy procedures; or radiography of the breast performed with an investigational mammography device as part of a scientific study conducted in accordance with FDA's investigational device exemption regulations.

29. Mammography equipment evaluation means an onsite assessment of mammography unit or image processor performance by a medical physicist for the purpose of making a preliminary determination as to whether the equipment meets all of the applicable standards in 21 CFR Part 900 the Quality Mammography Standards; Final Rule section 900.12(b) and (e).

30. Mammography medical outcomes audit means a systematic collection of mammography results and the comparison of those results with outcomes data.

31. Mammography unit or units means an assemblage of components for the production of x-rays for use during mammography, including, at a minimum: An x-ray generator, and x-ray control, a tube housing assembly, a beam limiting device, and the supporting structures for these components.

32. Mean optical density means the average of the optical densities measured using phantom thickness of 2, 4, and 6 centimeters with values of kilovolt peak (kVp) clinically appropriate for those thicknesses.

33. Medical physicist means a person trained in evaluating the performance of mammography equipment and facility quality assurance programs and who meets the qualifications for a medical physicist set forth in 21 CFR Part 900 the Quality Mammography Standards; Final Rule section 900.12(a)(3).

34. MQSA means the Mammography Quality Standards Act.

35. Multi-reading means two or more physicians, at least one of whom is an interpreting physician, interpreting the same mammogram.

36. Patient means any individual who undergoes a mammography evaluation in a facility, regardless of whether the person is referred by a physician or is self-referred.

37. Phantom means a test object used to simulate radiographic characteristics of compressed breast tissue and containing components that radiographically model aspects of breast disease and cancer.

38. Phantom image means a radiographic image of a phantom.

39. Physical science means physics, chemistry, radiation science (including medical physics and health physics), and engineering.

40. Positive mammogram means a mammogram that has an overall assessment of findings that are either "suspicious" or "highly suggestive of malignancy."

41. Provisional certificate means the provisional certificate described in section 900.11(b)(2).

42. Qualified instructor means an individual whose training and experience adequately prepares him or her to carry out specified training assignments. Interpreting physicians, radiologic technologists, or medical physicists who meet the requirements of section 900.12(a) would be considered qualified instructors in their respective areas of mammography. Other examples of individuals who may be qualified instructors for the purpose of providing training to meet the regulations of this part include, but are not limited to, instructors in a post-high school training institution and manufacturer's representatives.

43. Quality control technologist means an individual meeting the requirements of section 900.12(a)(2) who is responsible for those quality assurance responsibilities not assigned to the lead interpreting physician or to the medical physicist.

44. Radiographic equipment means x-ray equipment used for the production of static x-ray images.

45. Radiologic technologist means an individual specifically trained in the use of radiographic equipment and the positioning of patients for radiographic examinations and who meets the requirements set forth in section 900.12(a)(2).

46. Review physician means a physician who, by meeting the requirements set out in Section 900.4(c)(5), is qualified to review clinical images on behalf of the accreditation body.

47. Screening Mammography - Radiographic procedure provided to a woman, who has no signs or symptoms of breast cancer, for the purpose of early detection of breast cancer. The procedure entails two views of each breast and includes a physician's interpretation of the results of the procedure.

48. Serious adverse event means an adverse event that may significantly compromise clinical outcomes, or an adverse event for which a facility fails to take appropriate corrective action in a timely manner.

49. Serious compliant means a report of a serious adverse event.

50. Standard breast means a 4.2 centimeter (cm) thick compressed breast consisting of fifty (50%) percent glandular and fifty (50%) percent adipose tissue.

51. Survey means an onsite physics consultation and evaluation of a facility quality assurance program performed by a medical physicist.

52. Time cycle means the film development time.

53. Traceable to a national standard means an instrument is calibrated at either the National Institute of Standards and Technology (NIST) or at a calibration laboratory that participates in a proficiency program with NIST at least once every two (2) years and the results of the proficiency test conducted within twenty-four (24) months of calibration show agreement within +/- 3 percent of the national standard in the mammography energy range.

b. Accreditation

1. All facilities performing screening or diagnostic mammography shall be accredited every three (3) years by the Arkansas Department of Health or the American College of Radiology. Such accreditation shall in accordance with Food and Drug Administration (FDA) Mammography Quality Standards 21 CFR Parts 16 and 900 the Quality Mammography Standards; Final Rule.

2. No mammography shall be performed in an unaccredited facility after January 1, 1990. The owners of any unaccredited facility where in mammography is performed after January 1, 1990 shall be subject to a civil penalty imposed by the Arkansas Department of Health in an amount not to exceed one hundred dollars ($100) for each day the facility operates without accreditation by the Department.

c. Quality Standards.

1. Personnel. The following requirements apply to personnel involved in any aspect of mammography, including production, processing, and interpretation of mammograms and related quality assurance activities.

A. Interpreting Physicians. Interpreting Physicians shall meet the minimum requirements of 21 CFR Part 900.12(a)(1) of the Food and Drug Administration's Quality Mammography Standards; Final Rule.

B. Radiological Technologist.

i. Radiological Technologists shall meet the minimum requirements of 21 CFR Part 900.12.(a)(2) of the Food and Drug Administration (FDA) Quality Mammography Standards; Final Rule.

ii. Licensed by the State of Arkansas as a Registered Radiologic Technologist.

C. Mammography Imaging Medical Physicist.

i. Mammography Imaging Medical Physicists shall meet the minimum requirements of 21 CFR Part 900.12.(a)(3) of the Quality Mammography Standards; Final Rule.

ii. All Mammography Imaging Medical Physicists must be registered with the State as a vendor as required by RH-34.

2. Medical Physicist's Survey Requirements.

A. Medical Physicist's Surveys must be performed at least annually.

B. A Mammography Medical Physicist who meets the qualification requirements of RH-1610.c.1.C must sign all physicist survey reports.

C. Mammography Medical Physicists who sign a facility survey report must have been present in that facility during the survey.

D. Medical Physicist's Surveys must meet the requirements of the Food and Drug Administration (FDA) 21 CFR Part 900.12(e)(9).

3. Obtaining and preserving records. All reasonable efforts must be made to obtain any of the beneficiary's previous mammogram records, including original images and films, copies of written reports prepared by interpreting physicians, and other relevant information pertinent to previous mammograms that might be available from others, for comparison with current mammogram records. All reporting and record keeping must meet the requirements of the Food and Drug Administration (FDA) 21 CFR Part 900.12(c).

4. Equipment. The equipment used to perform mammography should be specifically designed for mammography and must meet the following standards:

A. Food and Drug Administration (FDA) Standards Quality Mammography Standards; Final Rule: 21 CFR Part 900.12(b).

B. Food and Drug Administration (FDA) Standards. Certified must meet the FDA; performance standards for diagnostic x-ray systems and their major components at 21 CFR 1020.30 and FDA's standards for radiographic equipment at 21 CFR 1020.31.

C. Focal spot size. The measured focal spot size of the x-ray tube should not exceed 0.7 mm.

D. Control panel indicators. The equipment must have a control panel that includes a device (usually a milliammeter) or means for an audible signal to give positive indication of the production of x-rays whenever the x-ray tube is energized. The control panel must include appropriate indicators (labeled control settings of meters that show the physical factors such as kilovoltage potential [kVp], milliampere seconds [mAs], exposure time, or whether timing is automatic) used for exposure.

E. All mammography units must be registered with the State of Arkansas as required by RH-21.

F. Mammography equipment evaluations. All variable parameters of the equipment must be evaluated and adjusted as needed to comply with the Food and Drug Administration (FDA) Quality Mammography Standards; Final Rule 21 CFR Part 900.12(e)(10). This includes but is not limited to the following:

i. When the equipment is installed;

ii. After any major changes or replacement of parts;

iii. When quality assurance tests indicate that calibration or other maintenance is needed;

iv. When equipment is disassembled and reassembled.

5 Safety standards. Mammograms must be conducted using equipment and operating procedures free of unnecessary hazards and providing minimum radiation exposure to patients, personnel, and other persons in the immediate environment.

A. Safety precautions. Proper safety precautions must be maintained. This includes adequate shielding for patients, personnel, and facilities. The equipment must be operable only form a shielded position.

B. Exposure badges. Personnel operating the equipment must be monitored in accordance with RH-1301 and RH-1302.

C. Equipment inspection. Periodic inspection of equipment and shielding must be made by a staff or consultant medical physicist or by a physicist approved by an appropriate State or local government agency as meeting the qualification requirements of RH-1610. Identified hazards must be promptly corrected.

D. Protection against electrical hazards. All equipment must be shockproof and grounded.

6. Quality assurance. Each facility must establish and maintain a quality assurance program that meets the requirements of 21 CFR Part 900.12(d) of the Food and Drug Administration (FDA) Quality Mammography Standards; Final Rule.

A. Responsibilities for the Lead Interpreting Physician. The Lead interpreting physician has the following responsibility:

i. Ensuring that the facility's quality assurance program meets all the requirements of 21 CFR Part 900.12(d) Food and Drug Administration (FDA) Quality Mammography Standards; Final Rule.

B. Responsibilities for the Mammography Medical Physicist. The person furnishing medical physics support has the overall responsibility for establishing and conducting the ongoing equipment quality assurance program. That individual's specific duties must include:

i. The duties outlined in 21 CFR Part 900.12 (d)(iii) of the Food and Drug Administration (FDA) Quality Mammography Standards; Final Rule.

ii. Conducting or training others to conduct equipment performance monitoring functions;

iii. Analyzing the monitoring results to determine if there are any problems requiring correction; and

iv. Carrying out or arranging for the necessary corrective actions as well as for the calibrations and other preventive maintenance.

v Conduct an annual survey of the facility's equipment quality assurance program as required by the Food and Drug Administration (FDA) Quality Mammography Standards; Final Rule 21 CFR Part 900.12(e)(10).

vi. Submit a written report describing the results of the survey as required by the Food and Drug Administration Quality Mammography Standards; Final Rule 21 CFR Part 900.12(e)(9)(iii).

C. Responsibilities of the Quality Control Technologist. The quality control technologist must perform the tasks within the quality assurance program that are not assigned to the Lead Interpreting Physician or the Medical Physicist.

D. Quality Assurance. The facility must ensure the quality of mammography by maintaining a quality assurance program that meets the requirements of the Food and Drug Administration (FDA) Quality Mammography Standards; Final Rule 21 CFR Part 900.12(e) and verifying that the action limits described in Part 900.12(e) have been met. These tests and their frequencies are as follows:

i. Daily: processor Performance tests, which includes assessment of base plus fog density, mid-density, and density difference.

ii. Weekly: image quality evaluation test using a FDA approved phantom.

iii. Quarterly: fixer retention in film test, repeat film analysis.

iv. Semi-annually: dark room fog evaluation, screen film contact test and compression device evaluation.

v. Annual testing: automatic exposure control performance, kilovoltage peak (kVp) accuracy and reproducibility, focal spot condition, breast entrance air kerma and AEC reproducibility, dosimetry, x-ray field/light field/image receptor/compression paddle alignment, uniformity of screen speed, radiation output, system artifacts, and decompression.

vi. Mobile Units. The facility shall verify that mammography units used to produce mammograms at more than one location meet the requirements in paragraphs (e)(1) through (e)(6) of this section. In addition, at each examination location, before any examinations are conducted, the facility shall verify satisfactory performance of such units using a test method that establishes the adequacy of the image quality produced by the unit.

vii. Quality control tests - other modalities. For systems with image receptor modalities other than screen-film, the quality assurance program shall be substantially the same as the quality assurance program recommended by the image receptor manufacturer, except that the maximum allowable dose shall not exceed the maximum allowable dose for screen-film systems in the Food and Drug Administration (FDA) 21 CFR Part 900.12 (e)(5)(vi).

viii. The facility shall establish and implement adequate protocols for maintaining darkroom, screen, and view box cleanliness and shall document that all cleaning procedures are performed at the frequencies specified in the protocols.

ix. Infection control. Facilities shall establish and comply with a system specifying procedures to be followed by the facility for cleaning and disinfecting mammography equipment after contact with blood or other potentially infectious materials. This system shall specify the methods for documenting facility compliance with the infection control procedures established and shall comply with the requirements of the Food and Drug Administration (FDA) Quality Mammography Standards; Final Rule 21 CFR Part 900.12(e)(13).

E. Evaluation of monitoring results. Quality Assurance test results must be evaluated in a timely manner by the individual that is responsible for performing the test to ensue compliance with the Food and Drug Administration (FDA) Quality Mammography Standards; Final Rule 21 CFR Part 900.12(e)(8). The responsible individuals are limited to the Lead Interpreting Physician, the Medical Physicist and the Quality Control Technologist.

F. Medical Outcomes Audit. Each facility must establish and maintain a medical outcomes audit program to follow-up positive mammographic assessments and to correlate pathology results to the interpreting physician's findings. This program must comply with the Food an Drug Administration (FDA) Quality Mammography Standards; Final Rule 21 CFR Part 900.12(f).

G. Procedures and Techniques for Mammography of patients with breast implants. Each facility must have procedures, which specify techniques, and procedures for imaging patients with breast implants. These procedures must comply with the Food and Drug Administration (FDA) Quality Mammography Standards; Final Rule 21 CFR Part 900.12(g).

H. Consumer Complaint Mechanism. Each facility must have a consumer complaint mechanism. This mechanism must comply with the Food and Drug Administration (FDA) Quality Mammography Standards; Final Rule 21 CFR Part 900.12(h).

7. Standards For Diagnostic Mammography. Facilities who wish to be accredited for diagnostic mammography shall, in addition to meeting all of the requirements for mammography also:

A. Have the interpreting physician as defined in RH-1610.c.1.A. present during all diagnostic mammography for direct supervision of the exam and film interpretation.

B. Have mammography systems with cone down compression and magnification capabilities, to enhance film interpretation.

d. Applications and Fees. Applications for accreditation or renewal shall be made on forms supplied by the Department. Evidence of compliance with all of the requirements for performing screening and/or diagnostic mammography and the accreditation fee must be included with the application.

e. Additional Review and Patient Notification

1. When quality assurance tests indicate that calibration is needed, and the Department believes that mammography quality at a facility has been compromised and may present a serious risk to human health, the facility shall provide clinical images and other relevant information, as specified by the Department, for review by the accreditation body. This additional mammography review will help the Department to determine whether the facility is in compliance with RH-1610 and, if not, whether there is a need to notify affected patients, their physicians or the public that the reliability, clarity and accuracy of interpretation of mammograms has been compromised.

2. If the Department determines that any activity related to the provision of mammography at a facility may present a serious risk to human health such that patient notification is necessary, the facility shall notify patients or their designees, their physicians or the public of action that may be taken to minimize the effects of the risk. Such notification shall occur within a timeframe and in a manner specified and approved by the Department.

f. Retention of Personnel Records. Facilities shall maintain records to document the qualifications of all personnel who worked at the facility as interpreting physicians, radiologic technologists, or medical physicists. These records must be available for review by the MQSA inspectors. Records of personnel no longer employed by the facility should not be discarded until the next annual inspection has been completed and FDA has determined that the facility is in compliance with MQSA personnel requirements.

g. Quality Assurance Record Keeping. All quality assurance record keeping shall meet the requirements of the Food and Drug Administration (FDA) Quality Mammography Standards; Final Rule 21 CFR Part 900.12(d)(2): The lead interpreting physician, quality control technologist, and medical physicist shall ensure that records concerning mammography technique and procedures, quality control (including monitoring data, problems detected by analysis of that data, corrective actions, and the effectiveness of the corrective actions), safety, and protection employee qualifications to meet assigned quality assurance tasks, are properly maintained and updated.

The quality control records shall be kept for each test specified in paragraphs (e) and (f) of this section until the next annual inspection has been completed and FDA has determined that the facility is in compliance with the quality assurance requirements or until the test has been performed two additional times at the required frequency, whichever is longer.

h. Clinical Image Quality. Clinical images produced by any certified facility must continue to comply with the standards for clinical image quality established by that facility's accreditation body.

RH-1611. Bone Densitometry

a. Bone densitometry systems shall be:

1. Certified by the U.S. Department of Health and Human Services

2. Registered in accordance with these regulations; and

3. Maintained and operated in accordance with the manufacturer's specifications.

b. Operators of bone densitometry systems shall be:

1. Licensed, certified, or permitted as a radiologic technologist by the Department; or

2. Licensed as a practitioner of the healing arts; or

3. Permitted or approved by the Department as a bone densitometry operator.

c. During the operation of any bone densitometry system:

1. The operator, ancillary personnel, and members of the general public shall be positioned at least one meter from the patient and bone densitometry system during the examination.

2. The operator shall advise the patient the bone densitometry examination is a type of x-ray procedure.

d. The registrant shall keep maintenance records for bone densitometry systems as prescribed. These records shall be maintained for inspection by the Department recordkeeping timelines as appropriate.

e. Bone densitometry on human patients shall be conducted only:

1. Under a prescription of a licensed practitioner of the healing arts; or

2. Under a screening program approved by the Department.

f. Any person proposing to conduct a bone densitometry screening program shall submit the information outlined in Schedule A of this Part with the exception of g, h, i, j, k, and m, and include the name and address of the individual who will interpret the screening results.

Schedule A

INFORMATION TO BE SUBMITTED BY PERSONS PROPOSING TO CONDUCT HEALING ARTS SCREENING

Persons requesting that the Agency approve a healing arts screening program shall submit the following information and evaluation:

a. Name and address of the applicant and, where applicable, the names and addresses of agents within this State;

b. Diseases or conditions for which the x-ray examinations are to used in diagnoses;

c. A detailed description of the x-ray examinations proposed in the screening program;

d. Description of the population to be examined in the screening program, i.e., age, sex, physical condition, and other appropriate information;

e. An evaluation of any known alternate methods not involving ionizing radiation which could achieve the goals of the screening program and why these methods are not used instead of the x-ray examinations;

f. An evaluation by a qualified expert of the x-ray system(s) to be used in the screening program. The evaluation by the qualified expert shall show that such system(s) do satisfy all requirements of these regulations. The evaluation shall include a measurement of patient exposures from the x-ray examinations to be performed;

g. A description of the diagnostic x-ray quality control program;

h. A copy of the technique chart for the x-ray examination procedures to be used;

i. The qualifications of each individual who will be operating the x-ray system(s);

.j. The qualifications of the individual who will be supervising the operators of the x-ray system(s). The extent of supervision and the method of work performance evaluation shall be specified;

k. The name and address of the individual who will interpret the radiograph(s);

Schedule A (Cont'd)

INFORMATION TO BE SUBMITTED BY PERSONS PROPOSING TO CONDUCT HEALING ARTS SCREENING

l. A description of the procedures to be used in advising the individual screening procedure and any further medical needs indicated;

m. A description of the procedures for the retention or disposition of the radiographs and other records pertaining to the x-ray examinations;

n. An indication of the frequency of screening and the duration of the entire screening program.

RH-1612.-
RH-1699. Reserved.

Revisions effective July 1, 2002

PART H.
SPECIAL REQUIREMENTS FOR THE USE OF SEALED RADIOACTIVE SOURCES IN THE HEALING ARTS

RH-1700. a. General Provisions. The provisions of this Part apply to all licensees who use sealed sources in medicine and veterinary medicine and are in addition to, and not in substitution for, other applicable provisions of these Regulations set out in Sections 1 and 2.

b. Definitions. As used in this Part, the following definitions apply:

Brachytherapy - A method of radiation therapy in which an encapsulated source or group of sources is utilized to deliver beta or gamma radiation at a distance of up to a few centimeters, by surface, intracavitary, or interstitial application.

Teletherapy - Therapeutic irradiation in which the source of radiation is at a distance from the body.

RH-1701. Interstitial, Intracavitary and Superficial Applications.

a. Accountability, Storage and Transit.

1. Except as otherwise specifically authorized by the Department, each licensee shall provide accountability of sealed sources and shall keep a permanent record of the issue and return of all sealed sources.

2. When not in use, sealed sources and applicators containing sealed sources shall be kept in a protective enclosure of such material and wall thickness as may be necessary to assure compliance with the provisions of RH-1200 and RH-1203.

3. Each licensee shall conduct a physical inventory at intervals not to exceed six (6) months to account for all sources and devices received and possessed. Records of the inventories shall be maintained for inspection by the Department and shall include the quantities and kinds of radioactive material, location of sources and devices and the date of the inventory.

4. Each licensee shall follow the radiation safety and handling instructions approved by the Department, the U.S. Nuclear Regulatory Commission or an Agreement State, and furnished by the manufacturer on the label attached to the source, device or permanent container thereof, or in the leaflet or brochure which accompanies the source or device, and maintain such instruction in a legible and conveniently available form.

5. Sealed sources shall not be opened by the licensee unless specifically authorized by a license issued by the Department, the U.S. NRC, or an Agreement State.

b. Testing Sealed Sources for Leakage and Contamination.

1. All sealed sources, containing more than 100 microcuries of radioactive material with a half-life greater than thirty (30) days, or 10 micro-curies of Radium-226, shall be tested for leakage and/or contamination at intervals not to exceed six (6) months or at such other intervals as are approved by the Department, the U.S. Nuclear Regulatory Commission or an Agreement State and described by the manufacturer on the label attached to the source, device or permanent container thereof or in the leaflet or brochure which accompanies the source or device. Each source or device shall be so tested prior to its first use unless the supplier furnishes a certificate that the source or device has been so tested within six (6) months prior to the transfer.

2. Leak tests shall be capable of detecting the presence of 0.005 microcurie of radioactive material on the test sample. The test sample shall be taken from the source or from the surfaces of the device in which the source is permanently or semi-permanently mounted or stored on which one might expect contamination to accumulate. Records of leak test results shall be kept in units of microcuries and maintained for inspection by the Department.

3. Any leak test conducted pursuant to RH-1701.b.1 which reveals the presence of 0.005 microcurie or more of removable contamination shall be considered evidence that the sealed source is leaking. The licensee shall immediately withdraw the source from use and cause it to be decontaminated and repaired or to be disposed of in accordance with Department Regulations. A report shall be filed within five (5) days of the test with the Department describing the equipment involved, the tests results and the corrective action taken.

c. Radiation Surveys.

1. The maximum radiation level at a distance of one (1) meter from the patient in whom brachytherapy sources have been inserted shall be determined by measurement or calculation. This radiation level shall be documented and maintained for inspection by the Department.

RH-1701. (Cont'd

2. The radiation levels in the patient's room and the surrounding area shall be determined, recorded and maintained for inspection by the Department.

3. The licensee shall assure that patients treated with temporary brachytherapy implants remain hospitalized until a source count and radiation survey of the patient confirm that all implants have been removed.

d. Signs and Records.

1. In addition to the requirements outlined in RH-1303, the bed, cubicle or room of the hospital brachytherapy patient shall be marked with a sign indicating the presence of brachytherapy sources. This sign shall incorporate the radiation symbol and specify the radionuclide, the activity, date and the individual(s) to contact for radiation safety instructions. The sign is not required provided the exception in RH-1304 is met.

2. The following information shall be documented and maintained for review by the Department:

A. The radionuclide administered, number of sources, activity in millicuries and time and date of administration;

B. The exposure rate at one (1) meter, the time the determination was made and by whom;

C. The radiation symbol; and

D. The precautionary instructions necessary to assure that the exposure of individuals does not exceed that permitted under Part C.

RH-1702. Teletherapy.

a. Equipment.

1. The housing shall be so constructed that at one meter from the source, the maximum exposure rate does not exceed 10 milliroentgens per hour when the beam control mechanism is in the "off" position. The average exposure rate measured at a representative number of points about the housing, each one meter from the source, shall not exceed 2 milliroentgens per hour.

2. For teletherapy equipment installed after the effective date of these Regulations, the leakage radiation measured at one meter from the source when the beam control mechanism is in the "on" position shall not exceed the larger of one (1) roentgen per hour or 0.1 percent of the useful beam exposure rate.

3. Adjustable or removable beam-defining diaphragms, shall allow transmission of not more than five percent of the useful beam.

4. The beam control mechanism shall be of a positive design capable of acting in any position of the housing. In addition to an automatic closing device, the mechanism shall be designed so that it can be manually returned to the "off" position with a minimum risk of exposure.

5. The closing device shall be so designed as to return automatically to the "off" position in the event of any breakdown or interruption of the activating force and shall stay in the "off" position until activated from the control panel.

6. When any door to the treatment room is opened, the beam control mechanism shall automatically and rapidly restore the unit to the "off" position and cause it to remain there until the unit is reactivated from the control panel.

7. The equipment shall be provided with a locking device to prevent unauthorized use.

8. There shall be at the housing and at the control panel a warning device that plainly indicates whether the beam is "on" or "off".

9. The control panel shall be provided with a timer that automatically terminates the exposure after a pre-set time.

10. Provision shall be made to permit continuous audible and visual observation of patients during irradiation.

b. <u>Shielding.</u>

1. Primary protective barriers, as defined in RH-1601.bo.1, shall be provided for any area that the useful beam may strike when using the largest possible diaphragm opening. Such barriers should extend at least one foot beyond the useful beam for any possible orientation.

2. Secondary protective barriers, as defined in RH-1601.bo.2, shall be provided for all occupied areas exposed to leakage and scattered radiation.

c. Testing for Leakage and Contamination. Teletherapy sources shall be tested for leakage and contamination in accordance with the procedures described in RH-1701.b except that the leak tests shall be capable of detecting 0.05 microcuries of removable contamination and a source shall be considered to be leaking if the test reveals the presence of 0.05 microcuries or more of removable contamination. Tests of leakage may be made by wiping accessible surfaces of the housing port or collimator while the source is in the "off" position and measuring these wipes for transferred contamination.

d. Operation. No individual shall be in the treatment room during irradiation unless that individual is the patient. Mechanical restraining or supporting devices shall be used for positioning the patient, if necessary.

e. Requirement to Perform Full Calibration Measurements of Teletherapy Units.

1. Any licensee authorized under RH-405.d to use teletherapy units for treating humans shall cause full calibration measurements to be performed on each teletherapy unit:

A. Prior to the first use of the unit for treating humans;

B. Prior to treating humans:

i. Whenever spot-check measurements indicate that the output value differs by more than five (5) percent from the value obtained at the last full calibration corrected mathematically for physical decay;

ii. Following replacement of the radiation source or following reinstallation of the teletherapy unit in a new location;

iii. Following any repair of the teletherapy unit that includes removal of the source or major repair of the components associated with the source exposure assembly.

C. At intervals not exceeding one year.

2. Full calibration measurements required by RH-1702.e.1 of this Section shall include determination of:

A. The exposure rate or dose rate to an accuracy with plus three (+3%) percent for the range of field sizes and for the range of distances (or for the axis distance) used in radiation therapy;

B. The congruence between the radiation field and the field indicated by the light beam localizing device;

C. The uniformity of the radiation field and its dependence upon the orientation of the useful beam;

D. Timer accuracy; and

E. The accuracy of all distance measuring devices used for treating humans.

3. Full calibration measurements shall be made in accordance with the procedures approved by the Department.

4. The exposure rate or dose rate values determined in RH-1702.e.2.A shall be corrected mathematically for physical decay for intervals not exceeding one month.

5. Full calibration measurements required by RH-1702.e of this Section and physical decay corrections required by RH-1702.e.4 shall be performed by an expert qualified by training and experience in accordance with RH-1702.h.

f. Requirement to Perform Periodic Spot-Check Measurements of Teletherapy Units.

1. Any licensee authorized under RH-405.d to use teletherapy units for treating humans shall cause spot-check measurements to be performed on each teletherapy unit at intervals not exceeding one month.

2. Spot-check measurements required by RH-1702.f.1 shall include determination of:

A. Timer accuracy;

B. The congruence between the radiation field and the field indicated by the light beam localizing device;

C. The accuracy of all distance measuring devices used for treating humans;

D. The exposure rate, dose rate or a quantity related in a known manner to these rates for one typical set of operating conditions; and

E. The difference between the measurement made in RH-1702.f.2.D and the anticipated output, expressed as a percentage of the anticipated output (i.e., the value obtained at last full calibration corrected mathematically for physical decay).

3. Spot-check measurements required by RH-1702.f.1 shall be performed in accordance with procedures established by an expert qualified by training and experience in accordance with RH-1702.h. (A qualified expert need not actually perform the spot-check measurements.) If a qualified expert does not perform the spot-check measurements, the results of the spot-check measurements shall be reviewed by a qualified expert within fifteen (15) days.

g. Requirement to Calibrate Instruments Used for Full Calibration and Spot-Check Measurements.

1. Full calibration required by RH-1702.e shall be performed using a dosimetry system that satisfies one of the two following conditions:

A. The system must have been calibrated by the National Institute of Standards and Technology [formerly called National Bureau of Standards] or by a calibration laboratory accredited by the American Association of Physicists in Medicine (AAPM). The calibration must have been performed within the previous two (2) years and after any servicing that may have affected system calibration; or

B. The system must have been calibrated by the National Institute of Standards and Technology [formerly called National Bureau of Standards] or by a calibration laboratory accredited by the AAPM within the previous four (4) years; 18 to 30 months after that calibration, the system must have been inter-compared at an inter-comparison meeting with another dosimetry system that was calibrated within the past twenty-four (24) months by the National Institute of Standards and Technology or by a calibration laboratory or radiologic physics center accredited by the AAPM. The results of the inter-comparison meeting must have indicated that the calibration factor of the licensee's system had not changed by more than two (2) percent. The licensee may not use the inter-comparison result to change the calibration factor. When inter-comparing dosimetry systems to be used for calibrating Cobalt-60 teletherapy units, the licensee shall use a teletherapy unit with a Cobalt-60 source. When inter-comparing dosimetry systems to be used for calibrating Cesium-137 teletherapy units, the licensee shall use a teletherapy unit with a Cesium-137 source.

2. Spot-check measurements required by RH-1702.f shall be performed using a dosimetry system that has been calibrated in accordance with RH-1702.g.1. Alternatively, a dosimetry system used solely for spot-check measurements may be calibrated by direct inter-comparison with a system that has been calibrated in accordance with RH-1702.g.1. This alternative calibration method shall have been performed within the previous one (1) year and after each servicing that may have affected system calibration. Dosimetry systems calibrated by this alternative method shall not be used for full calibration measurements.

h. <u>Qualified Expert.</u>

1. The licensee shall determine if a person is an expert qualified by training and experience to calibrate a teletherapy unit and establish procedures for (and review the results of) spot-check measurements.

2. Licensees that have their teletherapy units calibrated by individuals that do not meet these criteria for minimum training and experience may request a license amendment excepting them from RH-1702.h.1. The request should include the name of the proposed expert, a description of the individual's training and experience including information similar to that specified in RH-1100.ca., reports of at least one calibration and spot-check program based on measurements personally made by the proposed expert within the last 10 years and written endorsement of the technical qualifications of the proposed expert from the personal knowledge by a physicist certified by the American Board of Radiology in one of the specialties listed in RH-1100.ca.

i. Records. The licensee shall maintain, for inspection by the Department, records of the measurements, tests, corrective actions and instrument calibrations made under the provisions of RH-1702.e through g and records of the licensee's evaluation of the qualified expert's training and experience made under RH-1702.h.

1. Records of:

A. Full calibration measurements under RH-1702.e; and

B. Calibration of the instruments used to make these measurements under RH-1702.g, shall be preserved for five (5) years after completion of the full calibration.

2. Records of:

A. Spot-check measurements and corrective action under RH-1702 and;

B. Calibration of instruments used to make spot-check measurements under RH-1702.g shall be preserved for two (2) years after completion of the spot-check measurements and corrective actions.

3. Records of the licensee's evaluation of the qualified expert's training and experience under RH-1702.h shall be preserved for five (5) years after the qualified expert's last performance of a full calibration on the licensee's teletherapy unit.

RH-1702. (Cont'd)

j. Radiation Monitoring Device.

1. A licensee shall install in each teletherapy room a permanent radiation monitor capable of continuously monitoring beam status.

2. Each radiation monitor must be capable of providing visible notice of teletherapy unit malfunction that results in an exposed or partially exposed source. The visible indicator of high radiation levels must be observable by an individual entering the teletherapy room.

3. Each radiation monitor must be equipped with an emergency power supply separate from the power supply to the teletherapy unit. This emergency power supply may be a battery system.

4. Each radiation monitor must be checked for proper operation each day before the teletherapy unit is used for treatment of patients.

5. A licensee shall maintain a record of the check required by RH-1702.j.4 of this Section for two (2) years. The record must include the date of the check, notation that the monitor indicates when the source is and is not exposed and the initials of the individual who performed the check.

6. If a radiation monitor is inoperable for any reason, the licensee shall require any individual entering the teletherapy room to use a survey instrument or audible alarm personal dosimeter to monitor for any malfunction of the source exposure mechanism that may result in an exposed or partially exposed source. The instrument or dosimeter must be checked for proper operation at the beginning of each day of use.

7. A licensee shall promptly repair or replace the radiation monitor if it is inoperable.

k. Five-Year Inspection.

1. A licensee shall have each teletherapy unit fully inspected and serviced during teletherapy source replacement or at intervals not to exceed five (5) years, whichever comes first, to assure proper functioning of the source exposure mechanism.

2. This inspection and servicing shall only be performed by persons specifically licensed to do so by the Department, the U.S. Nuclear Regulatory Commission, or an Agreement State.

RH-1703.-
RH-1799. Reserved.

PART I.
RADIATION SAFETY REQUIREMENTS FOR INDUSTRIAL RADIOGRAPHIC OPERATIONS.

RH-1800. General Provisions.

a. Purpose. The Regulations in this Part establish radiation safety requirements for persons utilizing sources of radiation for industrial radiography. The requirements of this Part are in addition to and not in substitution for other applicable requirements of these Regulations.

b. Scope. The Regulations in this Part apply to all licensees or registrants who use sources of radiation for industrial radiography. Except for the Regulations in this Part clearly applicable only to sealed radioactive sources, both radiation machines and sealed radioactive sources are covered by this Part. The provisions of this Part are not applicable to systems designed exclusively for microscopic examination of material, e.g., x-ray diffraction, spectroscopic and electron microscope equipment or to systems for intentional exposure of humans to x-rays.

c. Definitions. As used in these Regulations. Additional definitions used only in a certain part will be found in that part.

1. Access panel - Any barrier or panel which is designed to be removed or opened for maintenance or service purposes, requires tools to open and permits access to the interior of the cabinet.

2. ALARA (acronym for “as low as is reasonably achievable”) - Making every reasonable effort to maintain exposures to radiation as far below the dose limits specified in Section 3, Part C. **PERMISSIBLE DOSES, LEVELS, AND CONCENTRATIONS** as is practical, consistent with the purpose for which the licensed or registered activity is undertaken, taking into account the state of technology, the economics of improvements in relation to state of technology, the economics of improvement in relation to benefits to the public health and safety, and other societal and socioeconomic considerations, and in relation to utilization of nuclear energy, licensed materials, and x-ray equipment in the public interest.

3. Annual refresher safety training - A review conducted or provided by the licensee or registrant for its employees on radiation safety aspects of industrial radiography. The review may include, as appropriate, the results of internal inspections, new procedures or equipment, new or revised regulations, accidents or errors that have been observed, and should also provide opportunities for employees to ask safety questions.

4. Aperture - Any opening in the outside surface of the cabinet, other than a port, which remains open during generation of x-radiation.

5. Associated equipment - Equipment that is used in conjunction with a radiographic exposures device to make radiographic exposures that drives, guides, or comes in contact with the source, (e.g., guide tube, control tube, control (drive) cable, removable source stop, “J” tube and collimator when it is used as an exposure head.

6. Becquerel (Bq) - One disintegration per second.

7. Cabinet radiography - Industrial radiography conducted in an enclosed cabinet which is so shielded that every location on the exterior meets conditions for an unrestricted area as specified in RH-1208.

8. Cabinet x-ray system - An x-ray system with the x-ray tube installed in an enclosure (hereinafter termed "cabinet") which, independently of existing architectural structures except the floor on which it may be placed, is intended to contain at least that portion of a material being irradiated, provide radiation attenuation and exclude personnel from its interior during generation of x-radiation. Included are all x-ray systems designed primarily for the inspection of carry-on baggage at airline, railroad and bus terminals and in similar facilities. An x-ray tube used within a shielded part of a building or x-ray equipment which may temporarily or occasionally incorporate portable shielding is not considered a cabinet x-ray system.

9. Certified cabinet system - X-ray systems which are subject to regulations promulgated under Public Law 90-602, the Radiation Control for Health and Safety Act of 1968.

10. Certifying Entity - An independent certifying organization meeting the requirements in Appendix “IRC” or an Agreement State meeting the requirements in Appendix “IRC”, Parts II and III of this Part.

11. Collimator - A device used to limit the size and direction of radiation shield that is placed on the end of the guide tube or directly onto a radiographic exposure device to restrict the size of the radiation beam when the sealed source is cranked into position to make a radiographic exposure.

12. Control (drive) cable - The cable that is connected to the source assembly and used to drive the source to and from the exposure location.

13. Control drive mechanism - A device that enables the source assembly to be moved to and from the exposure device.

14. Control tube - A protective sheath for guiding the control cable. The control tube connects the control drive mechanism to the radiographic exposure device.

15. Door - Any barrier which is designed to be movable or opened for routine operations purposes, does not generally require tools to open and permits access to the interior of the cabinet. For the purposes of RH-1803.g.1.A of this Section, inflexible hardware rigidly affixed to the door shall be considered part of the door.

16. Enclosed radiography - Industrial radiography conducted in an enclosed cabinet or room and includes cabinet radiography, cabinet x-ray systems and shielded room radiography.

17. Exposure head - A device that locates the gamma radiography sealed source in the selected working position. (An exposure head is also known as a source stop).

18. External surface - The outside surface of the cabinet x-ray system, including the high-voltage generator, doors, access panels, latches, control knobs and other permanently mounted hardware and including the plane across any aperture or port.

19. Field station - A facility where licensed material or registered x-ray equipment may be stored or used and from which equipment is dispatched.

20. Floor - The underside external surface of the cabinet.

21. Gray - The SI unit of absorbed dose. A gray is equal to an absorbed dose of one (1) Joule/kilogram. It is also equal to 100 rads.

22. Ground fault - An accidental electrical grounding of an electrical conductor.

23. Guide tube (Projection sheath) - A flexible or rigid tube (i.e., “J” tube) for guiding the source assembly and the attached control cable from the exposure device and to the exposure head. The guide tube may also include the connections necessary for attachment to the exposure device and to the exposure head.

24. Hands-on experience - Experience in all of those areas considered to be directly involved in the radiography process.

25. Independent Certifying Organization - An independent organization that meets all the criteria of Appendix “IRC”.

26. Industrial radiography (radiography) An examination of the structure of materials by non-destructive methods, utilizing ionizing radiation to make radiographic images.

27. Lay-barge radiography - Industrial radiography performed on any water vessel used for laying pipe.

28. Offshore platform radiography – Industrial radiography performed from a platform over a body of water.

29. Permanent radiographic installation An enclosed shielded room, cell, or vault, not located at a temporary jobsite, in which radiography is performed.

30. Personal supervision - Supervision such that the supervisor is physically present at the radiography site and in such proximity that contact can be maintained and immediate assistance given as required.

31. Port - Any opening in the outside surface of the cabinet which is designed to remain open, during generation of x-rays, for the purpose of conveying material to be irradiated into and out of the cabinet or for partial insertion for irradiation of an object whose dimensions do not permit complete insertion into the cabinet.

32. Practical Examination - A demonstration through practical application of the safety rules and principles in industrial radiography including use of all appropriate equipment and procedures.

33. Primary beam - The x-radiation emitted directly from the target and passing through the window of the x-ray tube.

34. Radiation Safety Officer for industrial radiography - An individual with the responsibility for the overall radiation safety program on behalf of the licensee or registrant and who meets the requirements of RH-1802.d.

35. Radiographer - Any individual who performs or who, in attendance at the site where sources of radiation are being used, personally supervises industrial radiographic operations and who is responsible to the licensee or registrant for assuring compliance with the requirements of these regulations and the conditions of registration or of a license.

36. Radiographer's assistant - Any individual who, under the direct supervision of a radiographer, uses radiographic exposure devices, sealed sources or related handling tools, or radiation survey instrumentation in industrial radiography.

37. Radiographer certification - Written approval received from a certifying entity stating that an individual has satisfactorily met certain established radiation safety, testing, and experience criteria.

38. Radiographer instructor - Any radiographer who has been listed on a specific license from the Department and meeting the requirements of RH-1803.f.5.

39. Radiographic exposure device - Any instrument containing a sealed source fastened or contained therein, in which the sealed source or shielding thereof may be moved or otherwise changed, from a shielded to unshielded position for purposes of making a radiographic exposure.

40. Radiographic operations - All activities associated with the presence of radioactive sources in a radiographic exposure device or x-ray equipment during use of the device or transport (except when being transported by a common or contract transport), to include surveys to confirm the adequacy of boundaries, setting up equipment and any activity inside restricted area boundaries.

41. Radiography - The examination of the structure of materials by nondestructive methods, utilizing sealed sources of radioactive materials.

42. Safety interlock - A device which is intended to prevent the generation of x-radiation when access by any part of the human body to the interior of the cabinet x-ray system through a door or access panel is possible.

43. Sealed source - Any radioactive material that is encased in a capsule designed to prevent leakage or escape of the radioactive material.

44. Shielded room radiography - Industrial radiography conducted in an enclosed room, the interior of which is not occupied during radiographic operations, which is so shielded that every location on the exterior meets condition for an unrestricted area as specified in RH-1208.

45. Shielded position - The location within the radiographic exposure device or source changer where the sealed source is secured and restricted from movement.

46. Sievert - The SI unit of any of the quantities expressed as dose equivalent. The dose equivalent in sieverts is equal to the absorbed dose in grays multiplied by the quality factor (1Sv = 100 rems).

47. Source Assembly - An assembly that consists of the sealed source and a connector that attaches the source to the control cable. The source assembly may also include a stop ball used to secure the source in the shielded position.

48. Source changer - A device designed and used for replacement of sealed sources in radiographic exposure devices, including those also used for transporting and storage of sealed sources.

49. S-tube - A tube through which the radioactive source travels when inside a radiographic exposure device.

50. Storage area - Any location, facility, or vehicle which is used to store, to transport, or to secure a radiographic exposure device, a storage container, or a sealed source when it is not in use and which is locked or has a physical barrier to prevent accidental exposure, tampering with, or unauthorized removal of the device, container, or source.

51. Storage container - A container in which sealed sources are secured and stored.

52. Temporary job site - A location where radiographic operations are conducted and where licensed material may be stored other than the location(s) of use authorized on the license or registration.

53. Transport container - A package that is designed to provide radiation safety and security when sealed sources are transported and meets all applicable requirements of the U.S. Department of Transportation.

54. Underwater radiography - Industrial radiography performed when the radiographic exposure device and/or related equipment are beneath the surface of the water.

55. X-ray system - An assemblage of components for the controlled generation of x-rays.

56. X-ray tube - Any electron tube which is designed for the conversion of electrical energy into x-ray energy.

d. Recordkeeping Requirements.

1. Records of the specific license for industrial radiography.

Each licensee shall maintain a copy of its license, license conditions, documents incorporated by reference, and amendments to each of these items until superseded by new documents approved by the Department or until the Department terminates the license.

2. Records of receipt and transfer of sealed sources.

A. Each licensee shall maintain records showing the receipts and transfers of sealed sources and devices using depleted uranium (DU) for shielding and retain each record for three (3) years after it is made.

B These records must include the date, the name of the individual making the record, radionuclide, number of curies (becquerels) or mass (for depleted uranium (DU)) and manufacturer, model, and serial number of each sealed source and/or device, as appropriate.

3. Records of radiation survey instruments

Each licensee or registrant shall maintain records of the calibrations of its radiation survey instruments that are required in RH-1801.e.and retain each record for three (3) years after it is made.

4. Records of leak testing of sealed sources and devices containing depleted uranium (DU).

Each licensee shall maintain records of leak test results for sealed sources and for devices containing depleted uranium (DU). The results must be stated in units of microcuries (bequerels). The licensee shall retain each record for three (3) years after it is made or until the source in storage is removed.

5. Records of quarterly inventory.

A Each licensee shall maintain records of the quarterly inventory of sealed sources and of devices containing depleted uranium (DU) as required by RH-1801.g.and retain each record for three (3) years after it is made.

B. The record must include the date of the inventory, name of the individual conducting the inventory, radionuclide, number of curies (becquerels) or mass (for DU) in each device, location of sealed source and/or devices, and manufacturer, model, and serial number of each sealed source and/or device, as appropriate.

6. Utilization Logs

A. Each licensee or registrant shall maintain utilization logs showing for each sealed source or x-ray unit the following information:

i. A description, including the make, model, and serial number of the radiographic exposure device or transport or storage container in which the sealed source or x-ray tube is located;

ii. The identity and signature of the radiographer to whom assigned; and

iii. The plant or site where used and dates of use, including the dates removed and returned to storage.

B. The licensee or registrant shall retain the logs required by RH-1800.d.6.i.for three (3) years after the log is made.

7. Records of inspection and maintenance of radiographic exposure devices, transport and storage containers, associated equipment, source changers, and survey instruments.

A. Each licensee or registrant shall maintain records specified in RH-1801.i. of equipment problems found in daily checks and quarterly inspections of radiographic exposure devices, transport and storage containers, associated equipment, source changers, and survey instruments; and retain each record for three (3) years after it is made.

B. The record must include the date of the check or inspection, name of the inspector, equipment involved, any problems found, and what repair and/or maintenance, if any, was done.

8. Records of alarm system and entrance control checks at permanent radiographic installation.

Each licensee or registrant shall maintain records of alarm system and entrance control device tests required under RH-1801.j. and retain each record for three (3) years after it is made.

9. Records of training and certification.

Each licensee or registrant shall maintain the following records (of training and certification) for three (3) years after the record is made:

A. Records of training of each radiographer and each radiographer's assistant. The record must include radiographer certification documents and verification of certification status, copies of written tests, dates of oral and practical examinations, and names of individuals conducting and receiving the oral and practical examinations; and

B. Records of annual refresher safety training and semi-annual inspections of job performance for each radiographer and each radiographer's assistant. The records must list the topics discussed during the refresher safety training, the dates the annual refresher safety training was conducted, and the names of the instructors and attendees. For inspections of job performance, the records must also include a list showing the items checked and any non-compliances observed by the Radiation Safety Officer (RSO).

10. Copies of Operating and Emergency Procedures.

Each licensee or registrant shall maintain a copy of current operating and emergency procedures until the Department terminates the license or registration. Superseded material must be retained for three (3) years after the change is made.

11. Records of Personnel Monitoring.

Each licensee or registrant shall maintain the following sure records specified in RH-1802.c.:

A. Direct reading dosimeter readings and yearly operability checks required by RH-1802.c.2.and 3.for three (3) years after the record is made.

B. Records of alarm ratemeter calibrations for three (3) years after the record is made.

C. Reports received from the film badge, TLD, or Optically Stimulated Luminescent Dosimeter processor until the Department terminates the license or registration.

D. Records or estimates of exposures as a result of: off-scale personal direct reading dosimeters, or lost or damaged film badges, TLDs, or Optically Stimulated Luminescent Dosimeters, until the Department terminates the license or registration.

12. Records of Radiation Surveys.

Each licensee or registrant shall maintain a record of each exposure device survey conducted before the device is placed in storage as specified in RH-1803.c.3. if that survey is the last one performed in the workday. Each record must be maintained for three (3) years after it is made.

13. Form of Records.

Each record required by RH-1800.d. must be legible throughout the specified retention period. The record may be the original or a reproduced copy or a microform provided that the copy or microform is authenticated by authorized personnel and that the microform is capable of reproducing a clear copy throughout the required retention period. The record may also be stored in electronic media with the capability for producing legible, accurate, and complete records during the required retention period. Records, such as letters, drawings, and specifications, must include all pertinent information, such as stamps, initials, and signatures. The licensee or registrant shall maintain adequate safeguards against tampering with and loss of records.

14. Location of documents and records.

i. Each licensee or registrant shall maintain copies of records required by RH-1800.d. and other applicable regulations at the location specified in the licensee's license application.

ii. Each licensee or registrant shall also maintain copies of the following documents and records sufficient to demonstrate compliance at each applicable field station and each temporary jobsite:

A. The license or certificate of registration authorizing the use of licensed material or x-ray equipment;

B. A current copy of the Arkansas Rules and Regulations for Control of Sources of Ionizing Radiation

C. Utilization records for each radiographic exposure device dispatched from that location as required by RH-1800.d.6.

D. Records of equipment problems identified in daily checks of equipment as required by RH-1800.d.7.

E. Records of alarm system and entrance control checks as required by RH-1801.j.

F. Records of direct reading dosimeters such as pocket dosimeter and/or electronic personal dosimeters readings as required by RH-1800.d.11.

G. Operating and emergency procedures as required by RH-1802.b.

H. Evidence of the latest calibration of the radiation survey instruments in use at the site as required by RH-1801.e.

I. Evidence of the latest calibration of alarm ratemeters and operability checks of pocket dosimeters and/or electronic personal dosimeters as required by RH-1800.d.11.

J. Latest survey records as required by RH-1803.c.

K. The shipping papers for the transportation of radioactive materials as required by the U.S. Department of Transportation Regulations 49 CFR Parts 170 through 187; and

L. When operating under reciprocity pursuant to RH-750, a copy of the Agreement State or Nuclear Regulatory Commission license authorizing the use of licensed materials.

RH-1801. Equipment Control.

a. Performance requirements for radiography equipment. Equipment used in industrial radiographic operations must meet the following minimum criteria:

1. Each radiographic exposure device, source assembly or sealed source, and all associated equipment must meet the requirements specified in American National Standards Institute N432-1980, "Radiological Safety for the Design and Construction of Apparatus for Gamma Radiography", (published as NBS Handbook 136, issued January 1981). This publication has been approved for incorporation by the Director, Division of Radiation Control and Emergency Management. This publication may be purchased from the American National Standards Institute, Inc., 1430 Broadway, New York, New York 10018 Telephone (212) 642-4900.

A copy of the document is available for inspection in the Division of Radiation Control and Emergency Management, Arkansas Department of Health, 5800 West 10th Street, Suite 100, Little Rock, Arkansas 72204.

Engineering analysis may be submitted by an applicant or licensee to demonstrate the applicability of previously performed testing on similar individual radiography equipment components. Upon review, the Department may find this an acceptable alternative to actual testing of the component pursuant to the reference standard.

2. In addition to the requirements specified in RH-1801.a.1., the following requirements apply to radiographic exposure devices, source changers, source assemblies and sealed sources.

A. The licensee shall ensure that each radiographic exposure device has attached to it by the user a durable, legible, clearly visible label bearing the:

i. Chemical symbol and mass number of the radionuclide in the device;

ii. Activity and the date on which this activity was last measured;

iii. Model number (or product code) and serial number of the sealed source;

iv. Manufacturer's identity of the sealed source; and

v. Licensee's name, address, and telephone number.

B. Radiographic exposure devices intended for use as Type B transport containers must meet the applicable requirements of Section 4, Transportation of Radioactive Materials.

C. Modification of radiographic exposure devices, source changers, source assemblies, and associated equipment is prohibited, unless the design of any replacement component, including the source holder, source assembly, controls or guide tubes would not compromise the design safety features of the system.

3. In addition to the requirements specified in RH-1801.a.1. and 2., the following requirements apply to radiographic exposure devices, source assemblies, and associated equipment that allow the source to be moved out of the device for radiographic operation or to source changers.

A. The coupling between the source assembly and the control cable must be designed in such a manner that the source assembly will not become disconnected if cranked outside the guide tube. The coupling must be such that it cannot be unintentionally disconnected under normal and reasonably foreseeable abnormal conditions.

B. The device must automatically secure the source assembly when it is cranked back into the fully shielded position within the device. This securing system may only be released by means of a deliberate operation on the exposure device.

C. The outlet fittings, lock box, and drive cable fittings on each radiographic exposure device must be equipped with safety plugs or covers which must be installed during storage and transportation to protect the source assembly from water, mud, sand, or other foreign matter.

D. Each sealed source or source assembly must have attached to it or engraved on it, a durable, legible, visible label with the words

"DANGER - RADIOACTIVE".

The label must not interfere with the safe operation of the exposure device or associated equipment.

E. The guide tube must be able to withstand a crushing test that closely approximates the crushing forces that are likely to be encountered during use and be able to withstand a kinking resistance test that closely approximates the kinking forces likely to be encountered during use.

F. Guide tubes must be used when moving the source out of the device.

G. An exposure head or similar device designed to prevent the source assembly from passing out of the end of the guide tube must be attached to the outermost end of the guide tube during radiographic operations.

H. The guide tube exposure head connection must be able to withstand the tensile test for control units specified in ANSI N432- 1980.

I. Source changers must provide a system for assuring that the source will not be accidentally withdrawn from the changer when connecting or disconnecting the drive cable to or from a source assembly.

4. All radiographic exposure devices and associated equipment in use after January 10, 1996 must comply with the requirements of this Section.

5. Notwithstanding RH-1801.a, RH-1801.d, and RH-1801.e, equipment used in industrial radiographic operations need not comply with Section 8.9.2(c) of the Endurance Test in American National Standards Institute N432-1980, if the prototype equipment has been tested using a torque value representative of the torque that an individual using the radiography equipment can realistically exert on the lever or crankshaft of the drive mechanism

b. <u>Limits on external radiation levels from storage containers and source changers.</u>

The maximum exposure rate limit for storage containers and source changers are 200 millirem (2 millisieverts) per hour at any external surface, and ten (10) millirem (0.1 millisieverts) per hour at one (1) meter from any exterior surface with the sealed source in the shielded position.

c. Locking of radiographic exposure devices, storage containers, and source changers.

1. Each radiographic exposure device must have a lock or outer locked container designed to prevent unauthorized or accidental removal of the sealed source from its shielded position. The exposure device and/or its container must be kept locked (and if a keyed-lock, with the key removed at all times) when not under the direct surveillance of a radiographer or a radiographer's assistant except at permanent radiographic installations as in RH-1803.a. In addition, during radiographic operations the sealed source assembly must be secured in the shielded position each time the source is returned to that position.

2. Each sealed source storage container and source changer must have a lock or outer locked container designed to prevent unauthorized or accidental removal of the sealed source from its shielded position. Storage containers and source changers must be kept locked (and if a keyed-lock, with the key removed at all times) when containing sealed sources except when under the direct surveillance of a radiographer or a radiographer's assistant.

d. Storage precautions.

1. Locked radiographic exposure devices, storage containers and radiation machines shall be physically secured to prevent tampering or removal by unauthorized personnel.

2. Radiographic exposure devices, source changers, or transport containers that contain radioactive material may not be stored in residential locations. This rule does not apply to storage of radioactive material in a vehicle in transit for use at temporary job sites, if the licensee complies with RH-1801.d.3 and if the vehicle does not constitute a permanent storage location as described in RH-1801.d.4.

3. If a vehicle is to be used for storage of radioactive material, a vehicle survey shall be performed after securing radioactive material in the vehicle and before transport to ensure that radiation levels do not exceed the limits specified in RH-1208 at the exterior surface of the vehicle.

4. A storage or use location is permanent if radioactive material is stored or used at the location for more than 90 days and any one or more of the following applies to the location:

   A. Telephone service is established by the licensee;

   B. Industrial radiographic services are advertised for or from the location;

   C. Industrial radiographic operations are conducted at other sites due to arrangements made from the location.

e. Radiation survey instruments.

1. The licensee or registrant shall keep sufficient calibrated and operable radiation survey instruments at each location where radioactive material or industrial radiographic x-ray equipment is present to make the radiation surveys as required by this Part and RH-1300.

2. Instrumentation required by this Part shall have a range such that 2 milliroentgens per hour through 1 roentgen per hour can be measured and other ranges as necessary to determine conformance with other requirements of this Part must be capable of measuring a range from two (2) millirems (0.02 millisieverts) per hour through one (1) rem (0.01 millisieverts) per hour.

3. The licensee or registrant shall have each radiation survey instrument required in RH-1801.e.1.calibrated:

   A. At intervals not to exceed three (3) months and after each instrument servicing, except for battery changes;

   B. For linear scale instruments, at two (2) points located approximately one-third and two-thirds of full-scale; for logarithmic scale instruments, at midrange of each decade and at two (2) points on at least one decade, and for digital instruments at three (3) points between 2 and 1000 millirems (0.02 and 10 millisieverts) per hour; and

   C. So that an accuracy within plus or minus twenty (20) percent of the calibration source can be demonstrated at each point checked.

4. The licensee shall maintain records of these calibrations in accordance with RH-1800.d.3.

5. Each radiation survey instrument shall be checked with a radiation source at the beginning of each day of use and at the beginning of each work shift to ensure it is operating properly.

f. Leak testing, and replacement of sealed sources.

1. The replacement of any sealed source fastened to or contained in a radiographic exposure device and leak testing of any sealed source must be performed only by persons specifically authorized to do so by the Department, the U.S. Nuclear Regulatory Commission, or an Agreement State.

2. The opening, repair, or modification of any sealed source must be performed only by persons specifically authorized to do so by the Department, the U.S. Nuclear Regulatory Commission, or an Agreement State.

3. Testing and recordkeeping requirements.

A. Each licensee who uses a sealed source shall have the source tested for leakage at intervals not to exceed six (6) months. The leak testing of the source must be performed using a method approved by the Department, the U.S. Nuclear Regulatory Commission, or an Agreement State. The wipe sample should be taken from the nearest accessible point to the sealed source where contamination might accumulate. The wipe sample must be analyzed for radioactive contamination. The analysis must be capable of detecting the presence of 0.005 microcurie (185 Bq) of radioactive material on the test sample and must be performed by a person specifically authorized by the Department, the U.S. Nuclear Regulatory Commission, or an Agreement State to perform the analysis.

B. The licensee shall maintain records of the leak tests in accordance with RH-1800.d.4.

C. Unless a sealed source is accompanied by a certificate from the transferor that shows that it has been leak tested within six (6) months before the transfer, it may not be used by the licensee until tested for leakage. Sealed sources that are in storage and not in use do not require leak testing, but must be tested before use or transfer to another person if the interval of storage exceeds six (6) months.

4. Any test conducted pursuant to the requirements of RH-1801.f.2 and 3 which reveals the presence of 0.005 microcurie (185 Bq) or more of removable radioactive material must be considered evidence that the sealed source is leaking. The licensee shall immediately withdraw the equipment involved from use and shall cause it to be decontaminated and repaired or disposed of in accordance with Regulations of the Department. A report must be filed with the Department within five (5) days of any test with results that exceed the threshold in RH-1801.f., describing the equipment involved, the test results, and the corrective action taken.

5. Each exposure device using depleted uranium (DU) shielding and an “S” tube configuration must be tested for DU contamination at intervals not to exceed twelve (12) months. The analysis must be capable of detecting the presence of 0.005 microcurie (185 Bq) of radioactive material on the test sample and must be performed by a person specifically authorized by the Department, the U.S. Nuclear Regulatory Commission, or an Agreement State to perform the analysis. Should such testing reveal the presence of 0.005 microcurie (185 Bq) or more of removable DU contamination, the exposure device must be removed from use until an evaluation of the wear on the S-tube has been made. Should the evaluation reveal that the S-tube is worn through, the device may not be used again. DU shielded devices do not have to be tested for DU contamination while in storage and not in use. Before using or transferring such a device however, the device must be tested for DU contamination if the interval of storage exceeds twelve (12) months. A record of the DU leak-test must be made in accordance with RH-1800.d.

g. Quarterly inventory.

1. Each licensee shall conduct a quarterly physical inventory to account for all sealed sources and devices containing depleted uranium (DU) received and possessed under this license.

2 The licensee shall maintain records of the quarterly inventory in accordance with RH-1800.d.5.

h. Utilization logs. Each licensee or registrant shall maintain current logs, which shall be kept available for inspection by the Department, showing for each source of radiation the following information:

1. A unique identification (e.g., serial number) of each radiation machine, each radiographic exposure device in which a sealed source is located, and each sealed source;

2. The identity of the radiographer to whom assigned;

3. Locations where used and dates of use; and

4. The date(s) each source of radiation is removed from storage and returned to storage.

i. Inspection and maintenance of radiographic exposure devices, transport and storage containers, associated equipment, source changers, and survey instruments.

1. The licensee or registrant shall perform visual and operability checks on survey meters, radiographic exposure devices, transport and storage containers, associated equipment, source changers, and shutters on x-ray units before use on each day the equipment is used to ensure that the equipment is in good working condition, that the sources are adequately shielded, and that required labeling is present. Survey instrument operability must be performed using check sources or other appropriate means. If equipment problems are found, the equipment must be removed from service until repaired.

2. Each licensee or registrant shall have written procedures for:

A. Inspection and routine maintenance of radiographic exposure devices, source changers, associated equipment, transport and storage containers, and survey instruments at intervals not to exceed three (3) months or before the first use thereafter to ensure the proper functioning of components important to safety. Replacement components shall meet design specifications. If equipment problems are found, the equipment must be removed from service until repaired.

B. Inspection and maintenance necessary to maintain the Type B packaging used to transport radioactive materials. The inspection and maintenance program must include procedures to assure that Type B packages are shipped and maintained in accordance with the certificate of compliance or other approval.

C. Records of equipment problems and of any maintenance performed under RH-1801.i.1. and i.2. must be made in accordance with RH-1800.d.7.

j. Permanent radiographic installations.

1. Each entrance that is used for personnel access to the high radiation area in a permanent radiographic installation must have either:

A An entrance control of the type described in RH-1303.c.2 through 4 that reduces the radiation level upon entry into the area, or

B Both conspicuous visible and audible warning signals to warn of the presence of radiation. The visible signal must be activated by radiation whenever the source is exposed. The audible signal must be actuated when an attempt is made to enter the installation while the source is exposed.

2. The alarm system must be tested for proper operation with a radiation source each day before the installation is used for radiographic operations. The test must include a check of both the visible and audible signals. Entrance control devices that reduce the radiation level upon entry (designated in RH-1801.j.A. (1)) must be tested monthly. If an entrance control device or an alarm is operating improperly, it must be immediately labeled as defective and repaired within seven (7) calendar days. The facility may continue to be used during this seven (7) day period, provided the licensee or registrant implements the continuous surveillance requirements or RH-1803.a. and uses an alarming ratemeter, Test records for entrance controls and audible and visual alarm must be maintained in accordance with RH-1800.d.8.

k. Notifications

1. In addition to the reporting requirements specified in RH-1502 and under other Sections, each licensee or registrant shall provide a written report to the Director, Division of Radiation Control and Emergency Management, Arkansas Department of Health, 4815 West Markham Street, Mail Slot #30, Little Rock, Arkansas 72205-3867 within thirty (30) days of the occurrence of any of the following incidents involving radiographic equipment:

   A. Unintentional disconnection of the source assembly from the control cable.

   B. Inability to retract the source assembly to its fully shielded position and secure it in this position.

   C. Failure of any component (critical to safe operation of the device) to properly perform its intended function.

2. The licensee or registrant shall include the following information in each report submitted under RH-1801.a and in each report of overexposure submitted under RH-1504 which involves failure of safety components of radiography equipment:

   A. A description of the equipment problem.

   B. Cause of each incident, if known.

   C. Name of the manufacturer and model number of equipment involved in the incident.

   D. Place, time, and date of the incident.

   E. Actions taken to establish normal operations.

   F. Corrective actions taken or planned to prevent recurrence.

   G. Qualifications of personnel involved in the incident.

3. Any licensee or registrant conducting radiographic operations or storing radioactive material at any location not listed on the license or registration for a period in excess of 180 days in a calendar year, shall notify the Department prior to exceeding the 180 days.

I. Labeling, storage, and transportation.

1. The licensee may not use a source changer or a container to store licensed material unless the source changer or the storage container has securely attached to it a durable, legible, and clearly visible label bearing the standard trefoil radiation caution symbol in conventional colors, i.e., magenta, purple or black on a yellow background having a minimum diameter of 25 mm, and the wording

**"CAUTION *
RADIOACTIVE MATERIAL
NOTIFY CIVIL AUTHORITIES
(or "NAME OF COMPANY")
*_____ or "DANGER"**

2. The licensee may not transport licensed material unless the material is packaged, and the package is labeled, marked and accompanied with appropriate shipping papers in accordance with regulations set out in SECTION 4. TRANSPORTATION OF RADIOACTIVE MATERIALS.

3. Locked radiographic exposure devices and storage containers must be physically secured to prevent tampering or removal by unauthorized personnel. The licensee shall store licensed material in a manner which will minimize danger from explosion or fire.

4. The licensee shall lock and physically secure the transport package containing licensed material in the transport vehicle to prevent accidental loss, tampering, or unauthorized removal of the licensed material from the vehicle.

RH-1802. Personnel Radiation Safety Requirements for Radiographers and Radiographer's Assistants.

a. Conducting industrial radiographic operations.

1. Whenever radiography is performed at a location other than a permanent radiographic installation, the radiographer must be accompanied by at least one other qualified radiographer or an individual who has at a minimum met the requirements of RH-1802.b.3. The additional qualified individual shall observe the operations and be capable of providing immediate assistance to prevent unauthorized entry. Radiography may not be performed if only one (1) qualified individual is present.

2. All radiographic operations conducted at locations of use authorized on the license or on the x-ray registration must be conducted in a permanent radiographic installation, unless specifically authorized by the Department.

3. A licensee or registrant may conduct lay-barge or underwater radiography only if the procedures have been approved by the Department, by an Agreement State, or by the Nuclear Regulatory Commission.

b. Training.

1. The licensee or registrant may not permit any individual to act as a radiographer until the individual:

A. Has received training in RH-1804 in addition to a minimum of two (2) months of on-the-job training, and is certified through a radiographer certification program by a certifying entity in accordance with the criteria specified in Appendix IRC.

2. In addition, the licensee or registrant may not permit any individual to act as a radiographer until the individual:

   A. Has received copies of and instructions in the requirements described in this Part; RH-1511; in the applicable sections of Section 3. **"STANDARDS FOR PROTECTION AGAINST RADIATION" including its Part N: "NOTICES, INSTRUCTIONS AND REPORTS TO WORKERS: INSPECTIONS"** and in applicable Department of Transportation (DOT) as referenced in the Nuclear Regulatory Commission's (NRC)10 CFR Part 71, in the Department license(s) under which the radiographer will perform industrial radiography, the licensee's or registrant's operating and emergency procedures;

   B. Has demonstrated understanding of the licensee's license and the licensee's or registrant's operating and emergency procedures by successful completion of a written or oral examination covering this material.

   C. Has received training in the use of the licensee's or registrant's radiographic exposure devices, sealed sources, in the daily inspection of devices and associated equipment, and in the use of radiation survey instruments.

   D. Has demonstrated understanding of the use of radiographic exposure devices, sources, survey instruments and associated equipment described above in RH-1802.b.2.A. and RH-1802.b.2.C. by the successful completion of a practical examination covering this material.

3. The licensee or registrant may not permit any individual to act as a radiographer's assistant until the individual:

A. Has received copies of and instructions in the requirements described in this Part; RH-1511; in the applicable sections of Section 3. **"STANDARDS FOR PROTECTION AGAINST RADIATION" including its Part N: "NOTICES, INSTRUCTIONS AND REPORTS TO WORKERS: INSPECTIONS"** and in applicable Department of Transportation (DOT) as referenced in the Nuclear Regulatory Commission's (NRC) 10 CFR Part 71, in the Department license(s) under which the radiographer will perform industrial radiography, the licensee's or registrant's operating and emergency procedures;

B. Has developed competence in the use, under the personal supervision of the radiographer, radiographic exposure devices, sealed sources, associated equipment, and radiation survey instruments that the assistant will use; and

C. Has demonstrated understanding of the instructions provided above in RH-1802.b.3.A. by the successful completion of a written test on the subjects covered and has demonstrated competence in the use of hardware described in RH-1802.b.3.B. by the successful completion of a practical examination on the use of such hardware.

4. The licensee or registrant shall provide annual refresher safety training for each radiographer and radiographer's assistant at intervals not to exceed twelve (12) months.

5. Except as provided in RH-1802.b.5.d., the RSO or designee shall conduct an inspection program of the job performance of each radiographer and radiographer's assistant to ensure that the Department's regulations, license requirements, and the applicant's operating emergency procedures are followed. The inspection program must:

A. Include observation of the performance of each radiographer and radiographer's assistant during an actual industrial radiographic operation, at intervals not to exceed six (6) months; and

B. Provide that, if a radiographer or radiographer's assistant has not participated in an industrial radiographic operation for more than six (6) months since the last inspection, the radiographer must demonstrate knowledge of the training requirements of RH1802.b.2.C. and the radiographer's assistant must re-demonstrate knowledge of the training requirements of RH-1802.b.3.B by a practical examination before these individuals can next participate in a radiographic operation.

C. The Department may consider alternatives in those situations where the individual serves as both radiographer and RSO.

D. In those operations where a single individual serves as both radiographer and RSO, and performs all radiography operations, an inspection program is not required.

6. The licensee or registrant shall maintain records of the above training to include certification documents, written and practical examinations, refresher safety training and inspections of job performance in accordance with RH-1800.d.9.

7. The licensee or registrant shall include the subjects detailed in RH-1804.

8. Records of radiographer certification maintained in accordance with RH-1800.d.9. provide appropriate affirmation of certification requirements specified in RH-1802.b.1.A.

c. Radiographer Certificate Card Confiscation. The Department may confiscate a radiographer's certification card should there be serious health and safety violations relating to the Regulations, license conditions, and/or licensee Operating and Emergency Procedures. The radiographer will be restricted from conducting radiographic operations within the State of Arkansas.

1. Following the confiscation of the radiographer's certification card, the conduct of any radiographic operations by this radiographer within the State of Arkansas shall be deemed deliberate misconduct as detailed in RH-1511.

2. The Department shall notify the licensee's management and the Certifying Entity of the certification card confiscation and the restrictions placed on the radiographer.

3. The Department shall return the Certification Card when the radiographer has been satisfactorily retrained and/or recertified by a Certifying Entity.

d. Radiation Safety Officer for Industrial Radiography. The Radiation Safety Officer (RSO) shall ensure that radiation safety activities are being performed in accordance with approved procedures and regulatory requirements in the daily operation of the licensee's or registrant's program.

1. The minimum qualifications, training, and experience of Radiation Safety Officers (RSO) for industrial radiography are as follows:

A. Completion of the training and testing requirements of RH 1802.b.3.A.;

B. 2000 hours of hands-on experience as a qualified radiographer in industrial radiographic operations; and

C. Formal training in the establishment and maintenance of a radiation protection program.

2. The Department will consider alternatives when the RSO has appropriate training and/or experience in the field of ionizing radiation, and in addition, has adequate formal training with respect to the establishment and maintenance of a radiation safety protection program.

3. The specific duties and authorities of the RSO include, but are not limited to:

A Establishing and overseeing all operating, emergency, and ALARA procedures as required by Section 3 **"STANDARDS FOR PROTECTION AGAINST RADIATION",** and reviewing them regularly to ensure that the procedures in use conform to current Section 3 procedures, conform to other Department regulations, and to the license conditions.

B. Overseeing and approving all phases of the training program for radiographic personnel, ensuring that appropriate and effective radiation protection practices are taught;

C. Ensuring that required radiation surveys and leak tests are performed and documented in accordance with the regulations, including any corrective measures when levels of radiation exceed established limits;

D. Ensuring that personnel monitoring devices are calibrated and used properly by personnel, that records are kept of the monitoring results, and that timely notifications are made as required by RH-1504; and

E. Ensuring that operations are conducted safely and to assume control for instituting corrective actions including stopping of operations when necessary.

e. Operating and emergency procedures.

1. The licensee's or registrant's operating and emergency procedures must include as a minimum, instructions in the following:

A. Appropriate handling and use of licensed sealed sources, radiographic exposure devices, and x-ray equipment (if used) so that no person is likely to be exposed to radiation doses in excess of the limits established in Part C of these Regulations;

B. Methods and occasions for conducting radiation surveys;

C. Methods for controlling access to radiographic areas;

D. Methods and occasions for locking and securing radiographic exposure devices, transport and storage containers and sealed sources;

E. Personnel monitoring and the use of personnel monitoring equipment;

F. Transporting sealed sources to field locations, including packing of radiographic exposure devices and storage containers in the vehicles, placarding of vehicles when needed, and control of the sealed sources during transportation.

G. The inspection, maintenance, and operability checks of radiographic exposure devices, survey instruments, transport containers, and storage containers;

H. Steps that must be taken immediately by radiography personnel in the event a pocket dosimeter is found to be off-scale or an alarm ratemeter alarms unexpectedly.

I. The procedure for notifying proper persons in the event of an accident;

J. Minimizing exposure of persons in the event of an accident;

K. Source recovery procedure if licensee will perform source recovery;

L. Maintenance of records.

2. The licensee or registrant shall maintain copies of current operating and emergency procedures in accordance with RH-1800.d.10.and RH-1800.d.14.

f. Personnel monitoring.

1. A licensee or registrant may not permit any individual to act as a radiographer or a radiographer's assistant unless, at all times during radiographic operations, each individual wears, on the trunk of the body, a combination of a direct reading pocket dosimeter, an operable alarm ratemeter, and either a film badge, a thermoluminescent dosimeter (TLD), or an Optically Stimulated Luminescent Dosimeter. At permanent radiography installations where other appropriate alarming or warning devices are in routine use, the wearing of an alarming ratemeter is not required.

A. Pocket dosimeters shall have a range from zero to 200 millirems (2 millisieverts) and must be recharged at the start of each shift. Electronic personal dosimeters may only be used in place of ion-chamber pocket dosimeters.

B. Each film badge, thermoluminescent dosimeter (TLD), and/or Optically Stimulated Luminescent Dosimeter must be assigned to and worn by only one (1) individual.

C. Film badges, thermoluminescent dosimeters (TLD), and Optically Stimulated Luminescent Dosimeter must be replaced at periods not to exceed one (1) month.

D. After replacement each film badge, thermoluminescent dosimeter (TLD), or Optically Stimulated Luminescent Dosimeter must be processed as soon as possible.

2. Direct reading dosimeters such as pocket dosimeters or electronic personal dosimeters, must be read and the exposures recorded at the beginning and end of each shift, and records must be maintained in accordance with RH-1800.d.11.

3. Pocket dosimeters, or electronic personal dosimeters, must be checked at periods not to exceed twelve (12) months for correct response to radiation, and records must be maintained in accordance with RH-1800.d.11. Acceptable dosimeters shall be read within plus or minus twenty (20) percent of the true radiation exposure

4. If an individual's pocket dosimeter is is found to be off-scale, or if his or her electronic personal dosimeter reads greater than 200 millirems (2 millisieverts), and the possibility of radiation exposure can not be ruled out as the cause, the individuals film badge, TLD, or Optically Stimulated Luminescent Dosimeter must be sent for processing within twenty-four (24) hours addition, the individual may not resume work associated with licensed material or other sources of radiation until a determination of the individual's radiation exposure had been made. This determination must be made by the RSO or the RSO's designee. The results of this determination must be included in the records maintained in accordance with RH-1800.d.11.

5. Reports received from the film badge thermoluminescent dosimeter, or Optically Stimulated Luminescent Dosimeter disposal must be retained in accordance with RH-1800.d.11.

6. If a film badge, TLD, or Optically Stimulated Luminescent Dosimeter is lost or damaged, the worker shall cease work immediately until a replacement film badge or TLD is provided and the exposure is calculated for the time period from issuance to loss or damage of the film badge, TLD, or Optically Stimulated Luminescent Dosimeter. The results of the calculated exposure and the time period for which the film badge, TLD, or Optically Stimulated Luminescent Dosimeter was lost or damaged must be included in the records maintained in accordance with RH-1800.d.11.

7. Each alarm ratemeter shall:

   A. Be checked to ensure that the alarm functions properly (sounds) before using at the start of each shift:

RH-1802. (Cont'd)

B. Be set to given an alarm signal at a preset dose rate of 500 mrem/hr (5 mSv/hr); with an accuracy rate of plus or minus twenty (±20%) percent of the true radiation dose rate;

C. Require special means to change the preset alarm function; and

D. Be calibrated at periods not to exceed twelve (12) months for correct response to radiation. The licensee or registrant shall maintain records of alarm ratemeter calibrations in accordance with RH-1800.d.11.

RH-1803. Precautionary Procedures in Radiographic Operations.

a. Surveillance. During each radiographic operation the radiographer or the other individual present as required in RH-1802.a. shall maintain continuous direct visual surveillance of the operation to protect against unauthorized entry into a high radiation area, as defined in Section 3, Part D, RH-1303.c., except at permanent radiographic installations where all entryways are locked and the requirements of RH-1801.j. are met.

b. Posting. All areas in which industrial radiography is being performed must be conspicuously posted as required by RH-1303.b. Exceptions listed in RH-1304.c. do not apply to industrial radiographic operations.

c. Radiation surveys. The licensee or registrant shall:

1. Conduct surveys with a calibrated and operable radiation survey instrument that meets the requirements of RH-1801.e.

2. Using a survey instrument meeting the requirement of RH-1803.c.1. above, conduct a survey of the radiographic exposure device and the guide tube after each exposure when approaching the device or the guide tube. The survey must determine that the sealed source has been returned to its shielded position before exchanging films, repositioning the exposure head, or dismantling equipment.

3. Conduct a survey of the radiographic exposure device with a calibrated radiation survey instrument any time the source is exchanged and whenever a radiographic exposure device is placed in a storage area (as defined in RH-1800.c.), to ensure that the sealed source is in its shielded position.

4. Maintain records in accordance with RH-1800.d.12.

d. Supervision of radiographer's assistants. Whenever a radiographer's assistant uses radiographic exposure devices, associated equipment or sealed sources or conducts radiation surveys required by RH-1803.c.2 to determine that the sealed source has returned to the shielded position after an exposure, the assistant shall be under the personal supervision of a radiographer. The personal supervision shall include:

1. The radiographer's physical presence at the site where the sealed sources are being used,

2. The availability of the radiographer to give immediate assistance if required, and

3. The radiographer's direct observation of the assistant's performance of the operations referred to in this Section.

e. Records required at temporary job sites. Each licensee or registrant conducting industrial radiography at temporary site shall have the following records available at that site for inspection by the Department:

1. Current copy of appropriate license, certificate of registration or an equivalent document.

2. Operating and emergency procedures.

3. Applicable regulations.

4. Survey records required pursuant to RH-1803.c for the period of operation at the site.

5. Daily pocket dosimeter records for the period of operation at the site.

6. The latest instrument calibration and leak test record for specific devices in use at the site.

f. Specific requirements for radiographic personnel performing industrial radiography.

1. At a job site, the following shall be supplied by the licensee or registrant:

   A. At least one operable, calibrated survey instrument;

   B. A current whole body personnel monitor (TLD or film badge) for each individual;

   C. An operable, calibrated pocket dosimeter with a range of zero to 200 milliroentgens for each worker; and

   D. An operable, calibrated alarming ratemeter set to give an alarm signal at a preset dose rate of 500 mR/hr; and

   E. The appropriate barrier ropes and signs.

2. Industrial radiographic operations shall not be performed if any of the items in RH-1803.f.1 are not available at the job site or are inoperable.

3. No individual other than a radiographer or a radiographer's assistant who is under the personal supervision of a radiographer instructor shall manipulate controls or operate equipment used in industrial radiographic operations.

4. During an inspection by the Department, the Department inspector may terminate an operation if any of the items in RH-1803.f.1 are not available and operable or if the required number of radiographic personnel are not present. Operations shall not be resumed until such conditions are met.

5. No individual shall act as a radiographer instructor unless such individual:

   A. Has met the requirements of RH-1802.b.1;

   B. Has one year of documented experience as an radiographer; and

   C. Has been named as a radiographer instructor on the license or registration certificate issued by the Department.

g. Special Requirements and Exemptions for Enclosed Radiography.

1. Cabinet X-ray Systems.

A. Emission limit.

i. Radiation emitted from the cabinet x-ray system shall not exceed an exposure of 0.5 milliroentgen in one hour at any point five (5) centimeters outside the external surface.

ii. Compliance with the exposure limit in RH-1803.g.1.A.i of this Section shall be determined by measurements averaged over a cross sectional area of 10 (ten) square centimeters with no linear dimension greater than five (5) centimeters, with the cabinet x-ray system operated at those combinations of x-ray tube potential, current, beam orientation and conditions of scatter radiation which produce the maximum x-ray exposure at the external surface and with the door(s) and access panel(s) fully closed as well as fixed at any other position(s) which will allow the generation of x-radiation.

B. Floors. A cabinet x-ray system shall have a permanent floor. Any support surface to which a cabinet x-ray system is permanently affixed may be deemed the floor of the system.

C. Ports and apertures.

i. The insertion of any part of the human body through any port into the primary beam shall not be possible.

ii. The insertion of any part of the human body through any aperture shall not be possible.

D. Safety interlocks.

i. Each door of a cabinet x-ray system shall have a minimum of two safety interlocks. One, but not both of the required interlocks shall be such that door opening results in physical disconnection of the energy supply circuit to the high-voltage generator and such disconnection shall not be dependent upon any moving part other than the door.

ii. Each access panel shall have at least one safety interlock.

iii. Following interruption of x-ray generation by the functioning of any safety interlock, use a control provided in accordance with RH-1803.g.1.F shall be necessary for resumption of x-ray generation.

iv. Failure of any single component of the cabinet x-ray system shall not cause failure of more than one required safety interlock.

E. Ground fault. A ground fault shall not result in the generation of x-rays.

F. Controls and indicators for all cabinet x-ray systems. For all systems to which this Section is applicable there shall be provided:

i. A key-actuated control to insure that x-ray generation is not possible with the key removed.

ii. A control or controls to initiate and terminate the generation of x-rays other than by functioning of a safety interlock or the main power control.

iii. Two independent means which indicate when and only when x-rays are being generated, unless the x-ray generation period is less than one-half second, in which case the indicators shall be activated for one-half second and which are discernible from any point at which initiation of x-ray generation is possible.

Failure of a single component of the cabinet x-ray system shall not cause failure of both indicators to perform their intended function. One, but not both of the indicators required by this subdivision may be a milliammeter labeled to indicate x-ray tube current. All other indicators shall legibly labeled **"X-RAY ON".**

iv. Additional means other than milliammeters which indicate when and only when x-rays are being generated, unless the x-ray generation period is less than one-half second in which case the indicators shall be activated for one-half second, as need to ensure that at least one indicator is visible from each door, access panel and port and is legibly labeled **"X-RAY ON".**

G. Additional controls and indicators for cabinet x-ray systems designed to admit humans. For cabinet x-ray systems designed to admit humans there shall also be provided:

i. Comply with all applicable requirements of this Part and RH-1208 of these Regulations. If such a system is a certified cabinet x-ray system, it shall comply with all applicable requirements of this Part and 21 CFR 1020.40.

ii. Be evaluated at intervals not to exceed one (1) year to assure compliance with the applicable requirements as specified in RH-1803.g.1.A. Records of these evaluations shall be maintained for inspection by the Department for a period of five (5) years after the evaluation.

iii. A control within the cabinet for preventing and terminating x-ray generation, which cannot be reset, over-ridden or bypassed from the outside of the cabinet.

iv. No means by which x-ray generation can be initiated from within the cabinet.

v. Audible and visible warning signals within the cabinet which are actuated for at least ten (10) seconds immediately prior to the first initiation of x-ray generation after closing any door designed to admit humans. Failure of any single component of the cabinet x-ray system shall not cause failure of both the audible and visible warning signals.

vi. A visible warning signal within the cabinet which remains actuated when and only when x-rays are being generated, unless the x-ray generation period is less than one-half second in which case the indicators shall be activated for one-half second.

vii. Signs indicating the meaning of the warning signals provided pursuant to RH-1803.g.1.G.v and iv and containing instructions for the use of the control provided pursuant to RH-1803.g.1.G.iii. These signs shall be legible, accessible to view and illuminated when the main power control is in the "on" position.

H. Warning labels.

i. There shall be permanently affixed or inscribed on the cabinet x-ray system at the location of any controls which can be used to initiate x-ray generation, a clearly legible and visible label bearing the statement:

CAUTION:
X-RAYS PRODUCED WHEN ENERGIZED

ii. There shall be permanently affixed or inscribed of the cabinet x-ray system at the location of any controls which can be used to initiate x-ray generation, a clearly legible and visible bearing the statement:

CAUTION: DO NOT INSERT ANY PART OF THE BODY WHEN SYSTEM IS ENERGIZED--
X-RAY HAZARD

I. Instructions.

i. Manufacturers of cabinet x-ray systems shall provide for purchasers and to others upon request at a cost not to exceed the cost of preparation and distribution, manuals and instructions which shall include at least the following technical and safety information: Potential, current and duty cycle ratings of the x-ray generation equipment; adequate instructions concerning any radiological safety procedures and precautions which may be necessary because of unique features of the system; and a schedule of maintenance necessary to keep the system in compliance with this Section.

ii. Manufacturers of cabinet x-ray systems which are intended to be assembled or installed by the purchaser, shall provide instructions for assembly, installation, adjustment and testing of the cabinet x-ray system adequate to assure the system is in compliance with applicable provisions of this Section when assembled, installed, adjusted and tested as directed.

J. Additional requirements for x-ray baggage inspection systems. X-ray systems designed primarily for the inspection of carry-on baggage at airline, railroad and bus terminals and at similar facilities, shall be provided with means, pursuant to RH-1803.g.1.J.i and ii, to insure operator presence at the control area in a position which permits surveillance of the ports and doors during generation of x-radiation.

i. During an exposure or preset succession of exposures of one-half second or greater duration, the means provided shall enable the operator to terminate the exposure or preset succession of exposures at any time.

ii. During an exposure or preset succession of exposures of less than one-half second or greater duration, the means provided may allow completion of the exposure in progress but shall enable the operator to prevent additional exposures.

2. Cabinet Radiography. Cabinet radiography units are exempt from other requirements of this Part; however,

   A. No licensee or registrant shall permit any individual to operate a cabinet radiography unit until such individual has received a copy of, and instruction in, and demonstrated an understanding of operating procedures for the unit, and has demonstrated competence in its use.

   B. A cabinet radiography unit shall not be operated until a physical radiation survey of the unit and areas adjacent to the unit has been performed. The licensee or registrant shall perform survey with a properly calibrated instrument as described in RH-1803.c. to determine conformance with RH-1200.

   C. The registrant shall perform an evaluation, at intervals not to exceed one (1) year, to determine conformance with Part C of these Regulations. If such a system is a certified cabinet x-ray system, it shall be evaluated at intervals not to exceed on (1) year to determine conformance with 21 CFR 1020.40. Records of these evaluations shall be maintained for inspection by the Department for a period of five (5) years after the evaluation.

   D. The operating personnel must be provided with either a film badge or a thermoluminescent dosimeter and reports of the results must be maintained for inspection by the Department.

   E. Tests for proper operation of high radiation control devices or alarm systems must be conducted and recorded in accordance with RH-1801.i.

3. Shielded room radiography. Shielded room radiography shall comply with all applicable requirements of this Part.

4. Certified cabinet x-ray systems shall be maintained in compliance with 21 CFR 1020.40 unless prior approval has been granted by the Department pursuant to RH-55 of these Regulations.

h. Prohibitions. Industrial radiography performed with a sealed source which is not fastened to or contained in a radiographic exposure device (fish pole technique) is prohibited unless specifically authorized in a license issued by the Department.

RH-1804. Subjects to be Covered During the Instruction of Radiographers.

a. Fundamentals of radiation safety including;

1. Characteristics of gamma and/or x-ray radiation;

2. Units of radiation dose and quantity of radioactivity

3. Hazards of exposure to radiation;

4. Levels of radiation from sources of radiation.

5. Methods of controlling radiation dose.

A. Time.

B. Distance.

C. Shielding

b. Radiation detection instruments including:

1. Use of radiation survey instruments.

A. Operation.

B. Calibration.

C. Limitations.

2. Survey techniques.

3. Use of personnel monitoring equipment.

A. Film badges.

B. Thermoluminescent dosimeters (TLDs).

C. Optically Stimulated Luminescent dosimeters.

D. Pocket dosimeters.

E. Alarm ratemeters.

c. Equipment to be used including:

1. Operation and control of radiographic exposure equipment, remote handling equipment, and storage containers, including pictures or models of source assemblies (pigtails).

2. Storage, control, and disposal of licensed material.

RH-1804. (Cont'd)

3. Inspection and maintenance of equipment.

4. Operation and control of x-ray equipment if applicable.

5. Collimators.

d. The requirements of pertinent State regulations.

e. The licensee's or registrant's written operating and emergency procedures.

f. Case histories of accidents in radiography.

RH-1805.-
RH-1899. Reserved.

APPENDIX IRC

RADIOGRAPHIC CERTIFICATION

I. Requirements for an Independent Certifying Organization.
An independent certifying organization shall:

1. Be an organization such as a society or association, whose members participate in, or have an interest in, the fields of industrial radiography;

2. Make its membership available to the general public nationwide that is not restricted because of race, color, religion, sex, age, national origin or disability;

3. Have a certification program open to nonmembers, as well as members;

4. Be an incorporated, nationally recognized organization, that is involved in setting national standards of practice within its fields of expertise;

5. Have an adequate staff, a viable system for financing its operations, and a policy-and-decision-making review board;

6. Have a set of written organizational by-laws and policies that provide adequate assurance of lack of conflict of interest and a system for monitoring and enforcing those by-laws and policies;

7. Have a committee, whose members can carry out their responsibilities impartially, to review and approve the certification guidelines and procedures, and to advise the organization's staff in implementing the certification program;

8. Have a committee, whose members can carry out their responsibilities impartially, to review complaints against certified individuals and to determine appropriate sanctions;

9. Have written procedures describing all aspects of its certification program, maintain records of the current status of each individual's certification and the administration of its certification program;

10. Have procedures to ensure that certified individuals are provided due process with respect to the administration of its certification program, including the process of becoming certified and any sanctions imposed against certified individuals;

11. Have procedures for proctoring examinations, including qualifications for proctors. These procedures must ensure that the individuals proctoring each examination are not employed by the same company or corporation (or a wholly-owned subsidiary of such company or corporation) as any of the examinees;

12. Exchange information about certified individuals with the Department and other independent certifying organizations and/or the Nuclear Regulatory Commission and/or Agreement States and allow periodic review of its certification program and related records; and

13. Provide a description to the Department of its procedures for choosing examination sites and for providing an appropriate examination environment.

II. Requirements for Certification Programs. All certification programs must:

1. Require applicants for certification to:

   A. Receive training in the topics set forth in RH-1804 or equivalent to NRC and/or Agreement State Regulations, and

   B. Satisfactorily complete a written examination covering these topics;

2. Require applicants for certification to provide documentation that demonstrates that the applicant has:

   A. Received training in the topics set forth in RH-1804 or equivalent NRC and/or Agreement State regulations;

   B. Satisfactorily completed a minimum period of on-the-job training; and

   C. Has received verification by an Agreement State or NRC licensee that the applicant has demonstrated the capability of independently working as a radiographer;

3. Include procedures to ensure that all examination questions are protected from disclosure;

4. Include procedures for denying an application, revoking, suspending, and reinstating a certificate;

5. Provide a certificate period of not less that three (3) years nor more than five (5) years;

6. Include procedures for renewing certifications and, if the procedures allow renewals without examination, require evidence of recent full-time employment and annual refresher training.

7. Provide a timely response to inquiries, by telephone or letter, from members of the public, about an individual's certification status.

III. Requirements for Written Examinations. All examinations must be:

1. Designed to test an individual's knowledge and understanding of the topics listed in RH-1804 or equivalent Agreement State and/or NRC requirements;

2. Written in a multiple-choice format;

3. Have test items drawn from a question bank containing psychometrically valid questions based on the material in RH-1804.

PART J.
RADIATION SAFETY REQUIREMENTS FOR WIRELINE SERVICE OPERATIONS AND SUBSURFACE TRACER STUDIES.

RH-1900. General Provisions.

a. Scope. The Regulations in this Part apply to all licensees who use sources of radiation for Wireline service operations including mineral logging, radioactive markers or subsurface tracer studies.

b. Purpose. The Regulations in this Part establish radiation safety requirements for persons utilizing sources of radiation for wireline service operations including mineral logging, radioactive markers and subsurface tracer studies. The requirements of this Part are in addition to and not in substitution for other applicable requirements of these Regulations.

c. Definitions. As used in this Part, the following definitions apply. Additional definitions used only in a certain Part will be found in that Part.

1. Energy Compensation Sources (ECS). A small sealed source, with an activity not exceeding 100 microcurie (3.7 MBq), used within a logging tool, or other tool components, to provide a reference standard to maintain the tool's calibration when in use.

2. Field station - A facility where radioactive sources may be stored or used and from which equipment is dispatched to temporary job sites.

3. Fresh water aquifer - A geologic formation that is capable of yielding fresh water to a well or spring.

4. Injection tool - A device used for controlled subsurface injection or radioactive tracer material.

5. Irretrievable well logging source - Any sealed source containing radioactive material that is pulled off or not connected to the wireline that suspend the source in the well and for which all reasonable effort at recovery has been expended.

6. Logging assistant - Any individual who, under the personal supervision of a logging supervisor, handles sealed sources, tracers, or radiation producing machines that are not in logging tools or shipping containers or who performs surveys required by RH-1967.

7. Logging supervisor - Any individual who uses radioactive material or radiation producing machines, or provides personal supervision in the use of radioactive material or radiation producing machines at a temporary jobsite and who is responsible to the licensee for assuring compliance with the requirements of the Department's Regulations and the conditions of the license.

8 Logging tool - Any device used subsurface to perform well-logging.

9. Mineral logging - Any logging performed for the purpose of mineral exploration other than oil or gas.

10. Particle accelerator - Any machine capable of accelerating elections, protons, deuterons or their charged particles in a vacuum and of discharging the resultant particulate or other radiation into a medium at energies usually in excess of one (1) MeV.

11. Personal supervision - Guidance and instruction by the logging supervisor who is physically present at the job site and watching the performance of the operation in such proximity that contact can be maintained and immediate assistance given as required.

12. Radioactive marker - Radioactive material placed subsurface or on a structure intended for subsurface use for the purpose of depth determination or direction orientation.

13. Safety review - A periodic review provided by the licensee for its employees on radiation safety aspects of well logging. The review may include, as appropriate, the results of internal inspections, new procedures or equipment, accidents or errors that have been observed, and opportunities for employees to ask safety questions.

14. Sealed source - Any radioactive material that is encased in a capsule designed to prevent leakage or escape of the radioactive material.

15. Source holder - A housing or assembly into which a radioactive source is placed for the purpose of facilitating the handling and use of the source in well-logging operations.

RH-1900. (Cont'd)

16. Subsurface tracer study - the release of a substance tagged with radioactive material for the purpose of tracing the movement or position of the tagged substance in the well-bore or adjacent formation.

17. Surface casing for protecting fresh water aquifers - a pipe or tube used as a lining in a well to isolate fresh water aquifers from the well.

18. Temporary jobsite - A location to which radioactive materials have been dispatched to perform wireline service operations and subsurface tracer studies are performed.

19. Tritium Neutron Generator Target Source - A tritium source used within a neutron generator tube to produce neutrons for use in well-logging applications.

20. Uranium sinker bar - A weight containing depleted Uranium used to pull a logging tool toward the bottom of a well.

21. Well-bore - A drilled hole in which wireline service operations and subsurface tracer studies are performed.

22. Well-logging - the lowering and raising of measuring devices or tools which may contain sources of radiation into well-bores or cavities for the purpose of obtaining information about the well and/or adjacent formations.

23. Wireline - A cable containing one or more electrical conductor which is used to lower and raise logging tools in the well-bore.

24. Wireline service operation - Any evaluation or mechanical service which is performed in the well-bore using devices on a wireline.

RH-1901-
RH-1910. Reserved.

RH-1911 Application for a Specific License. A person, as defined in RH-1100b.c. of these Regulations, shall file an application for a specific license authorizing the use of radioactive material in well logging in accordance with RH-403 and RH-404.

RH-1912. Reserved.

Revisions effective July 1, 2002

RH-1913. Specific Licenses for Well Logging. The Department will approve an application for a specific license for the use of radioactive material in well logging if the applicant meets the following requirements.

a. The application shall satisfy the general requirements specified in RH-404 of these Regulations, and any special requirements contained in this Part.

b. The applicant shall develop a program for training logging supervisors and logging assistants and submit to the Department a description of this program which specifies the:

1. Initial training;

2. On-the-job training;

3. Annual safety reviews provided by the licensee;

4. Means the applicant will use the demonstrate the logging supervisor's knowledge and understanding of and ability to comply with the Department's Regulations and licensing requirements and the applicant's operating and emergency procedures; and

5. Means the applicant will use to demonstrate the logging assistant's knowledge and understanding of and ability to comply with the applicant's operating and emergency procedures.

c. The applicant shall submit to the Department written operating and emergency procedures as described in RH-1963 or an outline or summary of the procedures that includes the important radiation safety aspects of the procedures.

d. The applicant shall establish and submit to the Department its program for annual inspections of the job performance of each logging supervisor to ensure that the Department's regulations, license requirements, and the applicant's operating and emergency procedures are followed. Inspection records must be retained for three (3) years after each annual internal inspection.

e. The applicant shall submit a description of its overall organizational structure as it applies to the radiation safety responsibilities in well logging, including specified delegations of authority and responsibility.

f. If an applicant wants to perform leak testing of sealed sources, the applicant shall identify the manufacturers and model numbers of the leak test kits to be used. If an applicant want to analyze its own wipe samples, the applicant shall establish procedures to be followed and submit a description of these procedures to the Department. The description must include the:

RH-1913. (Cont'd)

1. Instruments to be used;

2. Methods of performing the analysis; and

3. Pertinent experience of the person who will analyze the wipe samples.

RH-1914. Reserved.

RH-1915. Agreement with Well Owner or Operator.

a. A licensee may perform well logging with a sealed source only after the licensee has a written agreement with the employing well owner or operator. This written agreement must identify who will meet the following requirements:

1 If a sealed source becomes lodge in the well, a reasonable effort will be made to recover it.

2. A person may not attempt to recover a sealed source in a manner which, in the licensee's opinion, could result in its rupture.

3. The radiation monitoring required in RH-1969.a will be performed.

4. If the environment, any equipment, or personnel are contaminated with radioactive material, they must be decontaminated before release from the site or release for unrestricted use. And;

5. If the sealed source is classified as irretrievable after reasonable efforts at recovery have been expended, the following requirements must be implemented within thirty (30) days:

i. Each irretrievable well logging source must be immobilized and sealed in place with a cement plug;

ii. A means to prevent inadvertent intrusion on the source unless the source are not accessible to any subsequent drilling operations; and

iii. A permanent identification plaque, constructed of long-lasting material such as stainless steel, brass, bronze, or monel, must be mounted at the surface of the well, unless the mounting of the plaque is not practical. The size of the plaque must be at least seven (7) inches (17cm) square and 1/8-inch (3 mm) thick. The plaque [14/] must contain:

A. The word **"CAUTION";**

B. The radiation symbol (the color requirement in RH-1303.a.1 need not be met);

C. The date the source was abandoned;

D. The name of the well owner or operator, as appropriate;

E. The well name and well identification numbers(s) or other designation;

F. An identification of the sealed source(s) by radionuclide and quantity;

G. The depth of the source and depth to the top of the plug; and

H. An appropriate warning, such as **"DO NOT RE-ENTER THIS WELL".**[15/]

b. The licensee shall retain a copy of the written agreement for three (3) years after.

c. A licensee may apply, pursuant to RH-1991, for Department approval, on a case-by-case basis, of proposed procedures to abandon an irretrievable well logging source in a manner not otherwise authorized in RH-1915.a.5 of this Section.

d. A written agreement between the licensee and the well owner or operator is not required if the licensee and the well owner or operator are part of the same corporate structure or otherwise similarly affiliated. However, the licensee shall still otherwise meet the requirements of RH-1915.a.1 through RH-1915.a.5.

RH-1916. Reserved.

RH-1917. Request for Written Statements. Each licensee is issued with the condition that the licensee will, at any time before expiration of the license, upon the Department's request, submit written statements, signed under oath or affirmation, to enable the Department to determine whether or not the license should be modified, suspended, or revoked.

RH-1918.
RH-1930. Reserved.

RH-1931. Labels, Security, and Transportation Precautions.

a. Labels.

1. The licensee may not use a source, source holder, or logging tool that contains radioactive material unless the smallest component that is transported as a separate piece of equipment with the radioactive material inside bears a durable, legible, and clearly visible marking or label. The marking or label must contain the radiation symbol specified in RH-1303.a.1 and 2, without the conventional color requirements, and the wording

"DANGER (or CAUTION)
RADIOACTIVE MATERIAL."

2. The licensee may not use a container to store radioactive material unless the container has securely visible label. The label must contain the radiation symbol specified in RH-1303.a and the wording

"CAUTION (or DANGER), RADIOACTIVE MATERIAL, NOTIFY CIVIL AUTHORITIES OR
_____ IF FOUND.
(*Name of Company)*

3. The licensee may not transport radioactive material unless the material is packaged, labeled, marked, and accompanied with appropriate shipping papers in accordance with Section 4 of these Regulations.

b. Security Precautions During Storage and Transportation.

1. The licensee shall store each source containing radioactive material in a storage container or transportation package. The container or package must be locked and physically secured to prevent tampering or removal of radioactive material from storage by unauthorized personnel, the licensee will minimize the danger from explosion or fire.

RH-1931. (Cont'd)

2. The licensee shall lock and physically secure the transport package containing radioactive material in the transporting vehicle to prevent accidental loss, tampering, or unauthorized removal of the radioactive material from the vehicle.

RH-1932. Reserved.

RH-1933. Radiation Detection Instruments.

a. The licensee shall keep a calibrated and operable radiation survey instrument capable of detecting beta and gamma radiation at each field station and temporary jobsite to make the radiation surveys required by this Part and by other Parts of Section 3. To satisfy this requirement, the radiation survey instrument must be capable of measuring 0.1 mrem (0.001 mSv) per hour through at least 50 mrem (0.5 mSv) per hour.

b. The licensee shall have available additional calibrated and operable radiation detection instruments sensitive enough to detect the low radiation and contamination levels that could be encountered if a sealed source ruptured. The licensee may own the instruments or may have a procedure to obtain them quickly from a second party.

c. The licensee shall have each radiation survey instrument required under RH-1933.a of this Section calibrated:

1. At intervals not to exceed six (6) months and after instrument servicing;

2. For linear scale instruments, at two (2) points located approximately 1/3 and 2/3 of full-scale on each scale; for logarithmic scale instruments, at midrange of each decade, and at two (2) points of at least one decade; and for digital instruments, at appropriate points; and

3. So that an accuracy within plus or minus 20 percent (±20%) of the calibration standard can be demonstrated on each scale.

d. The license shall retain calibration records for a period of three (3) years after the date of calibration for inspection by the Department.

RH-1934. Reserved.

RH-1935. Leak Testing of Sealed Sources.

a. Testing and recordkeeping requirements. Each licensee who uses a sealed source shall have the source leak tested for leakage periodically. The licensee shall keep a record of leak test results in units of microcuries and retain the record for inspection by the Department for three (3) years after the leak test is performed.

b. Method of testing. The wipe of a sealed source must be performed using a leak test kit or method approved by the Department, The U.S. Nuclear Regulatory Commission, or an Agreement State. The wipe sample must be taken from the nearest accessible point to the sealed source where contamination might accumulate. The wipe sample must be analyzed for radioactive contamination. The analysis must be capable of detecting the presence of 0.005 microcurie (185 Bq) of radioactive material on the test sample and must be performed by a person approved by the Department, U.S. Nuclear Regulatory commission, or an Agreement State to perform the analysis.

c. Test frequency.

1. Each sealed source (except an Energy Compensation Source (ECS)) must be tested at intervals not to exceed six (6) months. In the absence of a certificate from a transferor that a test has been made within the six (6) months before the transfer, the sealed source may not be used until tested.

2. Each ECS that is not exempt from testing in accordance with RH-1935.c. must be tested at intervals not to exceed three (3) years. In the absence of a certificate from a transferor that a test has been made within the three (3) years before the transfer, the ECS may not be used until tested.

d. Removal of leaking source from service.

1. If the test conducted pursuant to RH-1935.a and RH-1935.b reveals the presence of 0.005 microcurie (185 Bq) or more of removable radioactive material, the licensee shall remove the sealed source from service immediately and have it decontaminated, repaired, or disposed of by a Department, U.S. Nuclear Regulatory Commission, or an Agreement State licensee that is authorized to perform these functions. The licensee shall check the equipment associated with the leaking source for radioactive contamination and, if contaminated, have it decontaminated or disposed of by a Department, U.S. Nuclear Regulatory Commission, or an Agreement State licensee that is authorized to perform these functions.

RH-1935. (Cont'd)

2. The licensee shall submit a report to the Department within five (5) days of receiving the test results. The report must describe the equipment involved in the leak, the test results, any contamination which resulted from the leaking source, and the corrective actions taken up to the time the report is made.

e. Exemptions from testing requirements. The following sealed sources are exempt from the periodic leak requirements set out in RH-1935.a through RH-1935.d:

1. Hydrogen-3 (tritium) sources;

2. Sources containing licensed material with a half-life of thirty (30) days or less;

3. Sealed sources containing licensed material in gaseous form;

4. Sources of beta- or gamma-emitting radioactive material with an activity of 100 microcuries (3.7 MBq) or less.

5. Sources of alpha- or neutron-emitting radioactive material with an activity of ten (10) microcuries (370,000 Bq) or less.

RH-1936. Reserved.

RH-1937. Physical Inventory. Each licensee shall conduct a quarterly physical inventory to account for all radioactive materiel received and possessed under the license. The licensee shall date the inventory for inspection by the Department. The inventory must indicate the quantity and type of radioactive material, the location of the radioactive material, the date of the inventory, and the name of the individual conducting the inventory.

RH-1938. Reserved.

RH-1939. Records of Material Use.

a. Each licensee shall maintain records for each use of radioactive material showing:

1. The make, model number, and a serial number or a description of each sealed source used;

2. In the case of unsealed radioactive material used for subsurface tracer studies, the radionuclide and quantity of activity used in a particular well and the disposition of any unused tracer material;

3. The identity of the logging supervisor who is responsible for the licensed material and the identity of logging assistants present; and

4. The location and date of use of the radioactive material.

b. The licensee shall make the records required by RH-1939.a of this Section available for inspection by the Department. The licensee shall retain the records for three (3) years from the date of the recorded event

RH-1940. Reserved.

RH-1941. Design and Performance Criteria for Sealed Sources.

a. A licensee may not use a sealed source in well-logging applications if:

1. The sealed source is doubly encapsulated;

2. The sealed source licensed material whose chemical and physical forms are as insoluble and nondispersible as practical; and

b. For a sealed source manufactured on or before July 14, 1989, a licensee may use the sealed source, for use in well-logging applications if it meets the requirements of USASI N5.10-1968, “Classification of Sealed Radioactive Sources,” or the requirements in RH-1941.c. or d.

c For a sealed source manufactured after July 14, 1989, a licensee may use the sealed source, for use in well-logging applications if it meets the oil-well logging requirements of ANSI/HPS N43.6-1997, “Sealed Radioactive Sources-Classification.”

RH-1941. (Cont'd)

d. For a sealed source manufactured after July 14, 1989, a licensee may use the sealed source, for use in well-logging applications, if:

1. The sealed source's prototype has been tested and found to maintain its integrity after each of the following tests:

A. Temperature. The test source must be held at -40º C for 20 minutes, 600º C for 1 hour, and then be subject to a thermal shock test with a temperature drop from 600º C to 20º C within 15 seconds.

B. Impact test. A 5 kg steel hammer, 2.5 cm in diameter, must be dropped from a height of 1 meter onto the test source.

C. Vibration test. The test source must be subject to a vibration from 25 Hz to 500 Hz at 5 gram amplitude for 30 minutes.

D. Puncture test. A 1 gram hammer and pin, 0.3 cm pin diameter, must be dropped from a height of 1 meter onto the test source.

E. Pressure test. The test source must be subject to an external pressure 24,600 pounds per square inch absolute (1.695×10^7 pascals).

e. The requirements of RH-1941.a., b., c., and d. do not apply to sealed sources that contain radioactive material in gaseous form.

f. The requirements in RH-1941.a., b., c., and d. do not apply to energy compensation sources (ECS). ECSs must be registered with the Department under RH-403.i., the Nuclear Regulatory Commission or with an Agreement State.

RH-1942. Reserved.

RH-1943. Inspection, Maintenance, and Opening of a Source or Source Holder.

a. Each licensee shall visually check source holders, logging tools, and source handling tools for defects before each use to ensure that the equipment is in good working condition and that required labeling is present. If defects are found, the equipment must be removed from service until repaired, and a record must be made listing: the date of the check, name of inspector, equipment involved, defects found, and repairs made. These records must be retained for three (3) years after the defect is found.

b. Each licensee shall have a program for semiannual visual inspection and routine maintenance of source holders, logging tools, injection tools, source handling tools, storage containers, transport containers, and Uranium sinker bars to ensure that the required labeling is legible and that no physical damage is visible. If defects are found, the equipment must be removed from service until repaired, and a record must be made listing: date, equipment involved, inspection and maintenance operations performed, any defects found, and any actions taken to correct the defects. These records must be retained for three (3) years after the defect is found.

c. Removal of a sealed source from a source holder or logging tool, and maintenance on sealed sources or holders in which sealed sources are contained may not be performed by the licensee unless a written procedure developed pursuant to RH-1963 has been approved either by the Department, U.S. Nuclear regulatory commission, or by an Agreement State pursuant to RH-1913.c.

d. If a sealed source is stuck in the source holder, the licensee may not perform any operation, such as drilling, cutting, or chiseling, on the source holder unless the licensee is specifically approved by the Department, U.S. Nuclear Regulatory Commission, or by an Agreement State to perform this operation.

e. The opening, repair, or modification of any sealed source must be performed by persons specifically approved to do so by the department, U.S. Nuclear Regulatory Commission, or by an Agreement State.

RH-1944. Reserved.

RH-1945. Subsurface Trace Studies.

a. The licensee shall require all personnel handling radioactive tracer material to use protective gloves and, if required by the license, other protective clothing and equipment. The licensee shall take precautions to avoid ingestion or inhalation of radioactive tracer material and to avoid contamination of field stations and temporary jobsites.

b. A licensee may not knowingly inject radioactive material into fresh water aquifers unless specifically authorized to do so by the Department.

RH-1946. Reserved.

RH-1947. Radioactive Markers. The licensee may use radioactive markers in wells only if the individual markers contain quantities of radioactive material not exceeding the quantities specified in RH-901, Schedule B. The use of markers is subject to the requirements of RH-1937.

RH-1948. Reserved.

RH-1949. Uranium Sinker Bars. The licensee may use a Uranium sinker bar in ~~a~~ well logging applications after July 14, 1988, only if it is legibly impressed with the words

"CAUTION - RADIOACTIVE - DEPLETED URANIUM" and "NOTIFY CIVIL AUTHORITIES OR_____ (or Company Name) IF FOUND" (fill in Company Name).

RH-1950. Reserved.

RH-1951. Use of a Sealed Source in a Well Without a Surface Casing. The licensee may use a sealed source in a well without a surface casing for protecting fresh water aquifers only if the licensee follows a procedure for reducing the probability of the source becoming lodged in the well. The procedure must be approved by the Department pursuant to RH-1913.

RH-1952. Reserved.

RH-1953. Energy Compensation Source. The licensee may use an energy compensation source (ECS) which is contained within a logging tool, or other tool components, only if the ECS contains quantities of licensed material not exceeding 100 microcuries (3.7 MBq).

a. For well logging applications with a surface casing for protecting fresh water aquifers, use of the ECS is only subject to the requirements of RH-1935, RH-1937, and RH-1939.

b. For well logging applications without a surface casing for protecting fresh water aquifers, use of the ECS is only subject to the requirements of RH-1915, RH-1935, RH-1937, RH-1939, RH-1951, and RH-1977.

RH-1954. Reserved.

RH-1955. Tritium Neutron Generator Target Source.

a. Use of a tritium neutron generator target source, containing quantities not exceeding thirty (30) curies (1,110 MBq) and in a well with a surface casing to protect fresh water aquifers, is subject to the requirements of this part except for RH-1915, RH-1941, and RH-1977.

b. Use of a tritium neutron generator target source, containing quantities exceeding thirty (30) curies (1,110 MBq) or in a well without a surface casing to protect fresh water aquifers, is subject to the requirements of this part except for RH-1941.

RH-1956-
RH-1960. Reserved.

RH-1961. Training.

a. The licensee may not permit an individual to act as a logging supervisor until that person:

1. Has completed training in the subjects outlined in RH-1961.e of this Section;

2. Has received copies of, and instruction in:

A. The applicable Parts of Section 3 of these Regulations;

B. The license under which the logging supervisor will perform well logging; and

C. The licensee's operating and emergency procedures required by RH-1963.

3. Has completed on-the-job training and demonstrated competence in the use of radioactive materials, remote handling tools, and radiation survey instruments by a field evaluation; and

4. Has demonstrated understanding of the requirements in RH-1961.a.1 and RH-1961.a.2 by successfully completing a written test.

b. The licensee may not permit an individual to act as a logging assistant until that person:

1. Has received instruction in applicable Parts of Section 3 of these Regulations;

2. Has received copies of, and instruction in, the licensee's operating and emergency procedures required by RH-1963;

3. Has demonstrated understanding of the material in RH-1961.b.1 and RH-1961.b.2 of this Section by successfully completing a written or oral test; and

4. Has received instruction in the use of radioactive materials, remote handling tools, and radiation survey instruments, as appropriate for the logging assistant's intended job responsibilities.

c. The licensee shall provide safety reviews for logging supervisors and logging assistants at least once during each calendar year.

d. The licensee shall maintain a record on each logging supervisor's and logging assistant's training and annual safety review. The training records must include copies of written tests and dates of oral tests given after July 14, 1987. The training records must be retained until three (3) year following the termination of employment. Records of annual safety reviews must list the topics discussed and be retained for three (3) years.

e. The licensee shall include the following subjects in the training required in RH-1961.a.1 of this Section.

1. Fundamentals of radiation safety, including:

A. Characteristics of radiation;

B. Units of radiation dose and quantity of radioactivity;

RH-1961. (Cont'd)

C. Hazards of exposure to radiation;

D. Levels of radiation from licensed material;

E. Methods of controlling radiation dose (time, distance, and shielding); and

F. Radiation safety practices, including prevention of contamination, and methods of decontamination.

2. Radiation detection instruments, including:

A. Use, operation, calibration, and limitations of radiation survey instruments;

B. Survey techniques; and

C. Use of personnel monitoring equipment.

3. Equipment to be used, including:

A. Operation of equipment, including source handling equipment and remote handling tools;

B. Storage, control, and disposal of radioactive material;

C. Maintenance of equipment.

4. The requirements of pertinent Department regulations; and

5. Case histories of accidents in well-logging.

RH-1962. Reserved.

RH-1963. Operating and Emergency Procedures. Each licensee shall develop and follow written operating and emergency procedures that cover:

a. The handling and use of radioactive materials including the use of sealed sources in wells without surface casing for protecting fresh water aquifers, if appropriate;

b. The use of remote handling tools for handling sealed sources and radioactive tracer material except low-activity calibration sources;

RH-1963. (Cont'd)

c. Methods and occasions for conducting radiation surveys, including surveys for detecting contamination, as required by RH-1967.c through RH-1967.e;

d. Minimizing personnel exposure including exposures from inhalation and ingestion of radioactive materials;

e. Methods and occasions for locking and securing stored radioactive materials;

f. Personnel monitoring and the use of personnel monitoring equipment;

g. Transportation of radioactive material to field stations or temporary jobsites, packaging of radioactive materials for transport in vehicles; placarding of vehicles when needed, and physically securing radioactive materials in transport vehicles during transportation to prevent accidental loss, tampering, or unauthorized removal;

h. Picking up, receiving, and opening packages containing radioactive materials, in accordance with RH-1307;

i. For the use of tracers, decontamination of the environment, equipment, and personnel;

j. Maintenance of records generated by logging personnel at temporary jobsites;

k. The inspection and maintenance of sealed sources, source holders, logging tools, injection tools, source handling tools, storage containers, transport containers, and Uranium sinker bars as required by RH-1943;

l. Actions to be taken if a sealed source is lodged in a well;

m. Notifying proper persons in the event of an accident; and

n. Actions to be taken if a sealed source is ruptured including actions to prevent the spread of contamination and minimize inhalation and ingestion of radioactive materials and actions to obtain suitable radiation survey instruments as required by RH-1933.b.

RH-1964. Reserved.

RH-1965. Personnel Monitoring.

a. The licensee may not permit an individual to act as a logging supervisor or logging assistant unless that persons wears, at all times during the handling of licensed radioactive materials, either a film badge or a thermoluminescent dosimeter (TLD). Each film badge or TLD must be assigned to and worn by only one individual Film badges must be replaced at least monthly and TLD replaced at least quarterly. After replacement, each film badge or TLD must be promptly processed.

b. The licensee shall provide bioassay services to individuals using radioactive materials in subsurface tracer studies if required by the license.

c. The licensee shall retain records of film badge, TLD, and bioassay results for inspection until the Department authorized disposition of the records.

RH-1966. Reserved.

RH-1967. Radiation Surveys.

a. The licensee shall make radiation surveys, including but not limited to the surveys required under RH-1967.b through RH-1967.e of this Section, of each area where radioactive materials are used and stored.

b. Before transporting radioactive materials, the licensee shall make a radiation survey of the position occupied by each individual in the vehicle and of the exterior of each vehicle used to transport the radioactive materials.

c. If the sealed source assembly is removed by the logging tool before departure from the temporary jobsite, the licensee shall confirm that the logging tool is free of contamination by energizing the logging tool detector or by using a survey meter.

d. If the licensee has reason to believe that, as a result of any operation involving a sealed source, the encapsulation of the sealed source could be damaged by the operation, the licensee shall conduct a radiation survey, including a contamination survey, during and after the operation.

e. The licensee shall make a radiation survey at the temporary jobsite before and after each subsurface tracer study to confirm the absence of contamination.

RH-1967. (Cont'd)

f. The results of surveys required under RH-1967.a through RH-1967.e of this Section must be recorded and must include the date of the survey, the name of the individual making the survey, the identification of the survey, instrument used, and the location of the survey. The licensee shall retain records of surveys for inspection by the Department for three (3) years after they are made.

RH-1968. Reserved.

RH-1969. Radioactive Contamination Control.

a. If the licensee detects evidence that a sealed source has ruptured or radioactive materials have caused contamination, the licensee shall initiate immediately the emergency procedures required by RH-1963.

b. If contamination results from the use of radioactive material in well logging, the licensee shall decontaminate all work areas, equipment, and unrestricted areas.

c. During efforts to recover a sealed source lodged in the well, the licensee shall continuously monitor, with an appropriate radiation detection instrument or a logging tool with a radiation detector, the circulating fluids from the well, if any, to check for contamination resulting from damage to the sealed source.

RH-1970. Reserved.

RH-1971. Security.

a. A logging supervisor must be physically present at a temporary jobsite whenever radioactive materials are being handled or are not stored and locked in a vehicle or storage place. The logging supervisor may leave the jobsite in order to obtain assistance if a source becomes lodged in a well.

b. During well logging, except when radiation sources are below ground or in shipping or storage containers, the logging supervisor or other individual designated by the logging supervisor shall maintain direct surveillance of the operation to prevent unauthorized entry into a restricted area, as defined in RH-1100.

RH-1972. Reserved.

RH-1973. Documents and Records Required at Field Stations. Each licensee shall maintain the following documents and records at the field station:

a. A copy of these Regulations;

b. The license authorizing the use of radioactive material;

c. Operating and emergency procedures required by RH-1963;

d. The record of radiation survey instrument calibrations required by RH-1933;

e. The record of leak test results required by RH-1935;

f. Physical inventory records required by RH-1937;

g. Utilization records required by RH-1939;

h. Records of inspection and maintenance required by RH-1943;

i. Training records required by RH-1961.d; and

j. Survey records required by RH-1967.

RH-1974. Reserved.

RH-1975. Documents and Records Required at Temporary Jobsites. Each licensee conducting operations at a temporary jobsite shall maintain the following documents and records at the temporary jobsite until the well-logging operation is completed:

a. Operating and emergency procedures required by RH-1963;

b. Evidence of latest calibration of the radiation survey instruments in use at the site required by RH-1933;

c. Latest survey records required by RH-1967.b, RH-1967.c, and RH-1967.e.

d. The shipping papers for the transportation of radioactive materials required by Section 4 of these Regulations;

e. When operating under reciprocity pursuant to Section 2, Part H of these Regulations, a copy of the U.S. Nuclear Regulatory Commission license or Agreement State license authorizing use of radioactive materials.

RH-1976. Reserved.

RH-1977. Notification of Incidents and Lost Sources; Abandonment Procedures for Irretrievable Sources.

a. The licensee shall immediately notify the Department by telephone and subsequently, within thirty (30) days, by confirmatory letter if the licensee knows or has reason to believe that a sealed source has been ruptured. The letter must designate the well or other location, describe the magnitude and extent of the escape of radioactive materials, assess the consequences of the rupture, and explain efforts planned or being taken to mitigate these consequences.

b. The licensee shall notify the Department of the theft or loss of radioactive materials, radiation overexposures, excessive levels and concentrations of radiation, and certain other accidents as required by RH-1501, RH-1502, and RH-1504 of these Regulations.

c. If a sealed source becomes lodged in a well, and when it becomes apparent that efforts to recover the sealed source will not be successful, the licensee shall:

1. Notify the Department by telephone of the circumstances that resulted in the inability to retrieve the source and

A. Obtain the Department's approval to implement abandonment procedures; or

B. That the licensee implemented abandonment before receiving the Department's approval because the licensee believed there was an immediate threat to public health and safety; and

2. Advise the well owner or operator, as appropriate, of the abandonment procedures under RH-1915.a or RH-1915.c; and

3. Either ensure that abandonment procedures are implemented within thirty (30) days after the sealed source has been classified as irretrievable or request an extension of time if unable to complete the abandonment procedures.

RH-1977. (Cont'd)

d. The licensee shall, within thirty (30) days after a sealed source has been classified as irretrievable, make a report in writing to the Department. The licensee shall send a copy of the report to each appropriate State or Federal agency that issued permits or otherwise approved the drilling operation. The report shall contain the following information:

1. Date of occurrence;

2. A description of the irretrievable well-logging source involved including the radionuclide and its quantity, chemical, and physical form;

3. Surface location and identification of the well;

4. Results of effort to immobilize and seal the source in place;

5. A brief description of the attempted recovery effort;

6. Depth of the source;

7. Depth of the top of the cement plug;

8. Depth of the well;

9. The immediate threat to public health and safety justification for implementing abandonment if prior Department approval was not obtained in accordance with RH-1977.c.1.ii.;

10. Any other information, such as a warning statement, contained on the permanent identification plaque; and

11. State and Federal agencies receiving a copy of this report.

RH-1978.
RH-1990. Reserved.

Revisions effective July 1, 2002

RH-1991. Applications for Exemptions. The Department may, upon application of any interested person or upon its own initiative, grant such exemptions from the requirements of the Regulations in this Part as it determines are authorized by law and will not endanger life or property or the common defense and security and are otherwise in the public interest.

Example of Plaque for Identifying Wells Containing Sealed Sources Containing Radioactive Material Abandoned Downhole

[COMPANY NAME]

[WELL IDENTIFICATION]

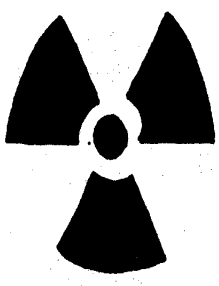

CAUTION

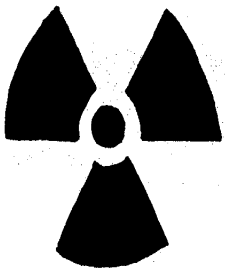

ONE 2 CURIE CS-137 RADIOACTIVE SOURCE ABANDONED
3-3-75 AT 8400 FT PLUG BACK DEPTH 8200 FT
DO NOT RE-ENTER THIS WELL BEFORE CONTACTING

ARKANSAS DEPARTMENT OF HEALTH

The size of the plaque should be convenient for use on active or inactive wells, e.g., a 7-inch square. Letter size of the word "CAUTION" should be approximately twice the letter size of the rest of the information, e.g., 1/2-inch and 1/4-inch letter size, respectively.

RH-1992. Subjects to be Included in Training Courses for Logging Supervisors.

a. Fundamentals of radiation safety.

1. Characteristics of radiation.

2. Units of radiation dose (rem) and quantity of radioactivity (curie).

3. Significance of radiation dose.

A. Radiation protection standards.

B. Biological effects of radiation dose.

4. Levels of radiation from sources of radiation.

5. Methods of minimizing radiation dose.

A. Working time.

B. Working distances.

C. Shielding.

b. Radiation detection instrumentation to be used.

1. Use of radiation survey instruments.

A. Operation.

B. Calibration.

C. Limitations.

2. Survey techniques.

3. Use of personnel monitoring equipment.

c. Equipment to be used.

1. Handling equipment.

2. Sources of radiation.

3. Storage and control of equipment.

4. Operation and control of equipment.

d. The requirements of pertinent federal and state regulations.

RH-1992. (Continued)

e. The licensee's written operating and emergency procedures.

f. The licensee's record keeping procedures.

RH-1993.
RH-1999. Reserved.

PART K. EXEMPTIONS AND ADDITIONAL REQUIREMENTS

RH-2000. Applications for Exemptions. The Department may, upon application therefore or upon its own initiative, grant such exemptions or exceptions from the requirements of these Regulations as it determines are authorized by law and will not result in undue hazard to public health and safety or to property.

RH-2001. Orders. The Department may, by order, impose upon any licensee or registrant such requirements, issued in furtherance of these Regulations, as it deems appropriate or necessary to protect health or minimize danger to life or property.

RH-2002.-
RH-2009. Reserved.

PART L. ENFORCEMENT

RH-2110. Violations.

a. Any person who violates any of the provisions of the Act or rules, regulations or orders in effect pursuant thereto of the Department shall, upon conviction thereof, be punished by a fine of not less than one hundred dollars ($100.00) nor more than two thousand dollars ($2,000.00) or by imprisonment for not more than six (6) months or be both so fined and imprisoned.

b. Impounding. Sources of radiation shall be subject to impounding pursuant to Section 5 of these Regulations.

RH-2111.-
RH-2199. Reserved.

RH-2200.

PART M. APPENDICES APPENDIX A

CONCENTRATIONS IN AIR AND WATER ABOVE NATURAL BACKGROUND
(See notes at end of Appendix)

Element (atomic number)	Isotope[16/]		Table I Column 1 Air (μCi/ml)	Table I Column 2 Water (μCi/ml)	Table II Column 1 Air (μCi/ml)	Table II Column 2 Water (μCi/ml)
Actinium (89)	Ac-227	S	2×10^{-12}	6×10^{-5}	8×10^{-14}	2×10^{-6}
		I	3×10^{-11}	9×10^{-3}	9×10^{-13}	3×10^{-4}
	Ac-228	S	8×10^{-8}	3×10^{-3}	3×10^{-9}	9×10^{-5}
		I	2×10^{-8}	3×10^{-3}	6×10^{-10}	9×10^{-5}
Americium(95)	Am-241	S	6×10^{-12}	1×10^{-4}	2×10^{-13}	4×10^{-6}
		I	1×10^{-10}	8×10^{-4}	4×10^{-12}	3×10^{-5}
	Am-242m	S	6×10^{-12}	1×10^{-4}	2×10^{-13}	4×10^{-6}
		I	3×10^{-10}	3×10^{-3}	9×10^{-12}	9×10^{-5}
	Am-242	S	4×10^{-8}	4×10^{-3}	1×10^{-9}	1×10^{-4}
		I	5×10^{-8}	4×10^{-3}	2×10^{-9}	1×10^{-4}
	Am-243	S	6×10^{-12}	1×10^{-4}	2×10^{-13}	4×10^{-6}
		I	1×10^{-10}	8×10^{-4}	4×10^{-12}	3×10^{-5}
	Am-244	S	4×10^{-6}	1×10^{-1}	1×10^{-7}	5×10^{-3}
		I	2×10^{-5}	1×10^{-1}	8×10^{-7}	5×10^{-3}
Antimony (51)	Sb-122	S	2×10^{-7}	8×10^{-4}	6×10^{-9}	3×10^{-5}
		I	1×10^{-7}	8×10^{-4}	5×10^{-9}	3×10^{-5}
	Sb-124	S	2×10^{-7}	7×10^{-4}	5×10^{-9}	2×10^{-5}
		I	2×10^{-8}	7×10^{-4}	7×10^{-10}	2×10^{-5}
	Sb-125	S	5×10^{-7}	3×10^{-3}	2×10^{-8}	1×10^{-4}
		I	3×10^{-8}	3×10^{-10}	9×10^{-3}	1×10^{-4}
Argon (18)	A-37	Sub[17/]	6×10^{-3}	------	1×10^{-4}	------
	A-41	Sub	2×10^{-6}	------	4×10^{-8}	------
Arsenic (33)	As-73	S	2×10^{-6}	1×10^{-2}	7×10^{-8}	5×10^{-4}
		I	4×10^{-7}	1×10^{-2}	1×10^{-8}	5×10^{-4}
	As-74	S	3×10^{-7}	2×10^{-3}	1×10^{-8}	5×10^{-5}
		I	1×10^{-7}	2×10^{-3}	4×10^{-9}	5×10^{-5}
	As-76	S	1×10^{-7}	6×10^{-4}	4×10^{-9}	2×10^{-5}
		I	1×10^{-7}	6×10^{-4}	3×10^{-9}	2×10^{-5}
	As-77	S	5×10^{-7}	2×10^{-3}	2×10^{-8}	8×10^{-5}
		I	4×10^{-7}	2×10^{-3}	1×10^{-8}	8×10^{-5}
Astatine 85)	At-211	S	7×10^{-9}	5×10^{-5}	2×10^{-10}	2×10^{-6}
		I	3×10^{-8}	2×10^{-3}	1×10^{-9}	7×10^{-5}
Barium (56)	Ba-131	S	1×10^{-6}	5×10^{-3}	4×10^{-8}	2×10^{-4}
		I	4×10^{-7}	5×10^{-3}	1×10^{-8}	2×10^{-4}
	Ba-140	S	1×10^{-7}	8×10^{-4}	4×10^{-9}	3×10^{-5}
		I	4×10^{-8}	7×10^{-4}	1×10^{-9}	2×10^{-5}

APPENDIX A (Continued)

CONCENTRATIONS IN AIR AND WATER ABOVE NATURAL BACKGROUND

(See notes at end of Appendix)

Element (atomic number)	Isotope[16/]		Table I Column 1 Air (μCi/ml)	Table I Column 2 Water (μCi/ml)	Table II Column 1 Air (μCi/ml)	Table II Column 2 Water (μCi/ml)
Berkelium (97)	Bk-249	S	9×10^{-10}	2×10^{-2}	3×10^{-11}	6×10^{-4}
		I	1×10^{-7}	2×10^{-2}	4×10^{-9}	6×10^{-4}
	Bk-250	S	1×10^{-7}	6×10^{-3}	5×10^{-9}	2×10^{-4}
		I	1×10^{-6}	6×10^{-3}	4×10^{-8}	2×10^{-4}
Beryllium (4)	Be-7	S	6×10^{-6}	5×10^{-2}	2×10^{-7}	2×10^{-3}
		I	1×10^{-6}	5×10^{-2}	4×10^{-8}	2×10^{-3}
Bismuth (83)	Bi-206	S	2×10^{-7}	1×10^{-3}	6×10^{-9}	4×10^{-5}
		I	1×10^{-7}	1×10^{-3}	5×10^{-9}	4×10^{-5}
	Bi-207	S	2×10^{-7}	2×10^{-3}	6×10^{-9}	6×10^{-5}
		I	1×10^{-8}	2×10^{-3}	5×10^{-10}	6×10^{-5}
	Bi-210	S	6×10^{-9}	1×10^{-3}	2×10^{-10}	4×10^{-5}
		I	6×10^{-9}	1×10^{-3}	2×10^{-10}	4×10^{-5}
	Bi-212	S	1×10^{-7}	1×10^{-2}	3×10^{-9}	4×10^{-4}
		I	2×10^{-7}	1×10^{-2}	7×10^{-9}	4×10^{-4}
Bromine (35)	Br-82	S	1×10^{-6}	8×10^{-3}	4×10^{-8}	3×10^{-4}
		I	2×10^{-7}	1×10^{-3}	6×10^{-9}	4×10^{-5}
Cadmium (48)	Cd-109	S	5×10^{-8}	5×10^{-3}	2×10^{-9}	2×10^{-4}
		I	7×10^{-8}	5×10^{-3}	3×10^{-9}	2×10^{-4}
	Cd-115m	S	4×10^{-8}	7×10^{-4}	1×10^{-9}	3×10^{-5}
		I	4×10^{-8}	7×10^{-4}	1×10^{-9}	3×10^{-5}
	Cd-115	S	2×10^{-7}	1×10^{-3}	8×10^{-9}	3×10^{-5}
		I	2×10^{-7}	1×10^{-3}	6×10^{-9}	4×10^{-5}
Calcium (20)	Ca-45	S	3×10^{-8}	3×10^{-4}	1×10^{-9}	9×10^{-6}
		I	1×10^{-7}	5×10^{-3}	4×10^{-9}	2×10^{-4}
	Ca-47	S	2×10^{-7}	1×10^{-3}	6×10^{-9}	5×10^{-5}
		I	2×10^{-7}	1×10^{-3}	6×10^{-9}	3×10^{-5}
Californium (98)	Cf-249	S	2×10^{-12}	1×10^{-4}	5×10^{-14}	4×10^{-6}
		I	1×10^{-10}	7×10^{-4}	3×10^{-12}	2×10^{-5}
	Cf-250	S	5×10^{-12}	4×10^{-4}	2×10^{-13}	1×10^{-5}
		I	1×10^{-10}	7×10^{-4}	3×10^{-12}	3×10^{-5}
	Cf-251	S	2×10^{-12}	1×10^{-4}	6×10^{-14}	4×10^{-6}
		I	1×10^{-10}	8×10^{-4}	3×10^{-12}	3×10^{-5}
	Cf-252	S	6×10^{-12}	2×10^{-4}	2×10^{-13}	7×10^{-6}
		I	3×10^{-11}	2×10^{-4}	1×10^{-12}	7×10^{-6}
	Cf-253	S	8×10^{-10}	4×10^{-3}	3×10^{-1}	1×10^{-4}
		I	8×10^{-10}	4×10^{-3}	3×10^{-11}	1×10^{-4}
	Cf-254	S	5×10^{-12}	4×10^{-6}	2×10^{-13}	1×10^{-7}
		I	5×10^{-12}	4×10^{-6}	2×10^{-13}	1×10^{-7}

APPENDIX A **(Continued)**

CONCENTRATIONS IN AIR AND WATER ABOVE NATURAL BACKGROUND

(See notes at end of Appendix)

Element (atomic number)	Isotope[16/]		Table I Column 1 Air (μCi/ml)	Table I Column 2 Water (μCi/ml)	Table II Column 1 Air (μCi/ml)	Table II Column 2 Water (μCi/ml)
Carbon (6)	C-14	S	4×10^{-6}	2×10^{-2}	1×10^{-7}	8×10^{-4}
	(CO2) Sub[17/]		5×10^{-5}	------	1 X 10-^{6}	------
Cerium (58)	Ce-141	S	4×10^{-7}	3×10^{-3}	2×10^{-8}	9×10^{-5}
		I	2×10^{-7}	3×10^{-3}	5×10^{-9}	9×10^{-5}
	Ce-143	S	3×10^{-7}	1×10^{-3}	9×10^{-9}	4×10^{-5}
		I	2×10^{-7}	1×10^{-3}	7×10^{-9}	4×10^{-5}
	Ce-144	S	1×10^{-8}	3×10^{-4}	3×10^{-10}	1×10^{-5}
		I	6×10^{-9}	3×10^{-4}	2×10^{-10}	1×10^{-5}
Cesium (55)	Cs-131	S	1×10^{-5}	7×10^{-2}	4×10^{-7}	2×10^{-3}
		I	3×10^{-6}	3×10^{-2}	1×10^{-7}	9×10^{-4}
	Cs-134m	S	4×10^{-5}	2×10^{-1}	1×10^{-6}	6×10^{-3}
		I	6×10^{-6}	3×10^{-2}	2×10^{-7}	1×10^{-3}
	Cs-134	S	4×10^{-8}	3×10^{-4}	1×10^{-10}	9×10^{-6}
		I	1×10^{-8}	1×10^{-3}	4×10^{-10}	4×10^{-5}
	Cs-135	S	5×10^{-7}	3×10^{-3}	2×10^{-8}	1×10^{-4}
		I	9×10^{-8}	7×10^{-3}	3×10^{-9}	2×10^{-4}
	Cs-136	S	4×10^{-7}	2×10^{-3}	1×10^{-8}	9×10^{-5}
		I	2×10^{-7}	2×10^{-3}	6×10^{-9}	6×10^{-5}
	Cs-137	S	6×10^{-8}	4×10^{-4}	2×10^{-9}	2×10^{-5}
		I	1×10^{-8}	1×10^{-3}	5×10^{-10}	4×10^{-5}
Chlorine (17)	Cl-36	S	4×10^{-7}	2×10^{-3}	1×10^{-8}	8×10^{-5}
		I	2×10^{-8}	2×10^{-3}	8×10^{-10}	6×10^{-5}
	Cl-38	S	3×10^{-6}	1×10^{-2}	9×10^{-8}	4×10^{-4}
		I	2×10^{-6}	1×10^{-2}	7×10^{-8}	4×10^{-4}
Chromium (24)	Cr-51	S	1×10^{-5}	5×10^{-2}	4×10^{-7}	2×10^{-3}
		I	2×10^{-6}	5×10^{-2}	8×10^{-8}	2×10^{-3}
Cobalt (27)	Co-57	S	3×10^{-6}	2×10^{-2}	1×10^{-7}	5×10^{-4}
		I	2×10^{-7}	1×10^{-2}	6×10^{-9}	4×10^{-4}
	Co-58m	S	2×10^{-5}	8×10^{-2}	6×10^{-7}	3×10^{-3}
		I	9×10^{-6}	6×10^{-2}	3×10^{-7}	2×10^{-3}
	Co-58	S	8×10^{-7}	4×10^{-3}	3×10^{-8}	1×10^{-4}
		I	5×10^{-8}	3×10^{-3}	2×10^{-9}	9×10^{-5}
	Co-60	S	3×10^{-7}	1×10^{-3}	1×10^{-8}	5×10^{-5}
		I	9×10^{-9}	1×10^{-3}	3×10^{-10}	3×10^{-5}
Copper (29)	Cu-64	S	2×10^{-6}	1×10^{-2}	7×10^{-8}	3×10^{-4}
		I	1×10^{-6}	6×10^{-3}	4×10^{-8}	2×10^{-4}

APPENDIX A **(Continued)**

CONCENTRATIONS IN AIR AND WATER ABOVE NATURAL BACKGROUND

(See notes at end of Appendix)

Element (atomic number)	Isotope[16/]		Table I Column 1 Air (μCi/ml)	Table I Column 2 Water (μCi/ml)	Table II Column 1 Air (μCi/ml)	Table II Column 2 Water (μCi/ml)
Curium (96)	Cm-242	S	1×10^{-10}	7×10^{-4}	4×10^{-12}	2×10^{-5}
		I	2×10^{-10}	7×10^{-4}	6×10^{-12}	2×10^{-5}
	Cm-243	S	6×10^{-12}	1×10^{-4}	2×10^{-13}	5×10^{-6}
		I	1×10^{-10}	7×10^{-4}	3×10^{-12}	2×10^{-5}
	Cm-244	S	9×10^{-12}	2×10^{-4}	3×10^{-13}	7×10^{-6}
		I	1×10^{-10}	8×10^{-4}	3×10^{-12}	3×10^{-5}
	Cm-245	S	5×10^{-12}	1×10^{-4}	2×10^{-13}	4×10^{-6}
		I	1×10^{-10}	8×10^{-4}	4×10^{-12}	3×10^{-5}
	Cm-246	S	5×10^{-12}	1×10^{-4}	2×10^{-13}	4×10^{-6}
		I	1×10^{-10}	8×10^{-4}	4×10^{-12}	3×10^{-5}
	Cm-247	S	5×10^{-12}	1×10^{-4}	2×10^{-13}	4×10^{-6}
		I	1×10^{-10}	6×10^{-4}	4×10^{-12}	2×10^{-5}
	Cm-248	S	6×10^{-13}	1×10^{-5}	2×10^{-14}	4×10^{-7}
		I	1×10^{-11}	4×10^{-5}	4×10^{-13}	1×10^{-6}
	Cm-249	S	1×10^{-5}	6×10^{-2}	4×10^{-7}	2×10^{-3}
		I	1×10^{-5}	6×10^{-2}	4×10^{-7}	2×10^{-3}
Dysprosium (66)	Dy-165	S	3×10^{-6}	1×10^{-2}	9×10^{-8}	4×10^{-4}
		I	2×10^{-6}	1×10^{-2}	7×10^{-8}	4×10^{-4}
	Dy-165	S	2×10^{-7}	1×10^{-3}	8×10^{-9}	4×10^{-5}
		I	2×10^{-7}	1×10^{-3}	7×10^{-9}	4×10^{-5}
Einsteinium (99)	Es-253	S	8×10^{-10}	7×10^{-4}	3×10^{-11}	2×10^{-5}
		I	6×10^{-10}	7×10^{-4}	2×10^{-11}	2×10^{-5}
	Es-254m	S	5×10^{-9}	5×10^{-4}	2×10^{-10}	2×10^{-5}
		I	6×10^{-9}	5×10^{-4}	2×10^{-10}	2×10^{-5}
	Es-254	S	2×10^{-11}	4×10^{-4}	6×10^{-13}	1×10^{-5}
		I	1×10^{-10}	4×10^{-4}	4×10^{-12}	1×10^{-5}
	Es-255	S	5×10^{-10}	8×10^{-4}	2×10^{-11}	3×10^{-5}
		I	4×10^{-10}	8×10^{-4}	1×10^{-11}	3×10^{-5}
Erbium (68)	Er-169	S	6×10^{-7}	3×10^{-3}	2×10^{-8}	9×10^{-5}
		I	4×10^{-7}	3×10^{-3}	1×10^{-8}	9×10^{-5}
	Er-171	S	7×10^{-7}	3×10^{-3}	2×10^{-8}	1×10^{-4}
		I	6×10^{-7}	3×10^{-3}	2×10^{-8}	1×10^{-4}
Europium (63)	Eu-152 (T/2= 9.2 hrs)	S	4×10^{-7}	2×10^{-3}	1×10^{-8}	6×10^{-5}
		I	3×10^{-7}	2×10^{-3}	1×10^{-8}	6×10^{-5}
	Eu-152 (T/2= 13 yrs)	S	1×10^{-8}	2×10^{-3}	4×10^{-10}	8×10^{-5}
		I	2×10^{-8}	2×10^{-3}	6×10^{-10}	8×10^{-5}
	Eu-154	S	4×10^{-9}	6×10^{-4}	1×10^{-10}	2×10^{-5}
		I	7×10^{-9}	6×10^{-4}	2×10^{-10}	2×10^{-5}

APPENDIX A **(Continued)**

CONCENTRATIONS IN AIR AND WATER ABOVE NATURAL BACKGROUND

(See notes at end of Appendix)

Element (atomic number)	Isotope[16/]		Table I Column 1 Air (μCi/ml)	Table I Column 2 Water (μCi/ml)	Table II Column 1 Air (μCi/ml)	Table II Column 2 Water (μCi/ml)
Europium (63) (Cont'd)	Eu-155	S	9×10^{-8}	6×10^{-3}	3×10^{-9}	2×10^{-4}
		I	7×10^{-8}	6×10^{-3}	3×10^{-9}	2×10^{-4}
Fermium (100)	Fm-254	S	6×10^{-8}	4×10^{-3}	2×10^{-9}	1×10^{-4}
		I	7×10^{-8}	4×10^{-3}	2×10^{-9}	1×10^{-4}
	Fm-255	S	2×10^{-8}	1×10^{-3}	6×10^{-10}	3×10^{-5}
		I	1×10^{-8}	1×10^{-3}	4×10^{-10}	3×10^{-5}
	Fm-256	S	3×10^{-9}	3×10^{-5}	1×10^{-10}	9×10^{-7}
		I	2×10^{-9}	3×10^{-5}	6×10^{-11}	9×10^{-7}
Fluorine (9)	F-18	S	5×10^{-6}	2×10^{-2}	2×10^{-7}	8×10^{-4}
		I	3×10^{-6}	1×10^{-2}	9×10^{-8}	5×10^{-4}
Gadolinium (64)	Gd-153	S	2×10^{-7}	6×10^{-3}	8×10^{-9}	2×10^{-4}
		I	9×10^{-8}	6×10^{-3}	3×10^{-9}	2×10^{-4}
	Gd-159	S	5×10^{-7}	2×10^{-3}	2×10^{-8}	8×10^{-5}
		I	4×10^{-7}	2×10^{-3}	1×10^{-8}	8×10^{-5}
Gallium (31)	Ga-72	S	2×10^{-7}	1×10^{-3}	8×10^{-9}	4×10^{-5}
		I	2×10^{-7}	1×10^{-3}	6×10^{-9}	4×10^{-5}
Germanium (32)	Ge-68	S	4×10^{-6}	2×10^{-2}	1×10^{-7}	8×10^{-4}
		I	1×10^{-8}	-----	5×10^{-10}	----
	Ge-71	S	1×10^{-5}	5×10^{-2}	4×10^{-7}	2×10^{-3}
		I	6×10^{-6}	5×10^{-2}	2×10^{-7}	2×10^{-3}
Gold (79)	Au-195*	S	8×10^{-6}	4×10^{-2}	3×10^{-7}	1×10^{-3}
		I	6×10^{-8}	6×10^{-3}	2×10^{-9}	2×10^{-4}
Gold (79)	Au-196	S	1×10^{-6}	5×10^{-3}	4×10^{-8}	2×10^{-4}
		I	6×10^{-7}	4×10^{-3}	2×10^{-8}	1×10^{-4}
	Au-198	S	3×10^{-7}	2×10^{-3}	1×10^{-8}	5×10^{-5}
		I	2×10^{-7}	1×10^{-3}	8×10^{-9}	5×10^{-5}
	Au-199	S	1×10^{-6}	5×10^{-3}	4×10^{-8}	2×10^{-4}
		I	8×10^{-7}	4×10^{-3}	3×10^{-8}	2×10^{-4}
Hafnium (72)	Hf-181	S	4×10^{-8}	2×10^{-3}	1×10^{-9}	7×10^{-5}
		I	7×10^{-8}	2×10^{-3}	3×10^{-9}	7×10^{-5}
Holmium (67)	Ho-166	S	2×10^{-7}	9×10^{-4}	7×10^{-9}	3×10^{-5}
		I	2×10^{-7}	9×10^{-4}	6×10^{-9}	3×10^{-5}
Hydrogen (1)	H-3	S	5×10^{-6}	1×10^{-1}	2×10^{-7}	3×10^{-3}
		I	5×10^{-6}	1×10^{-1}	2×10^{-7}	3×10^{-3}
	Sub[17/]		2×10^{-3}	------	4×10^{-5}	----

APPENDIX A **(Continued)**

CONCENTRATIONS IN AIR AND WATER ABOVE NATURAL BACKGROUND

(See notes at end of Appendix)

Element (atomic number)	Isotope[16/]		Table I Column 1 Air (μCi/ml)	Table I Column 2 Water (μCi/ml)	Table II Column 1 Air (μCi/ml)	Table II Column 2 Water (μCi/ml)
Indium (49)	In-113m	S	8×10^{-6}	4×10^{-2}	3×10^{-7}	1×10^{-3}
		I	7×10^{-6}	4×10^{-2}	2×10^{-7}	1×10^{-3}
	In-114m	S	1×10^{-7}	5×10^{-4}	4×10^{-9}	2×10^{-5}
		I	2×10^{-8}	5×10^{-4}	7×10^{-10}	2×10^{-5}
Indium (49)	In-115m	S	2×10^{-6}	1×10^{-2}	8×10^{-8}	4×10^{-4}
		I	2×10^{-6}	1×10^{-2}	6×10^{-8}	4×10^{-4}
	In-115	S	2×10^{-7}	3×10^{-3}	9×10^{-9}	9×10^{-5}
		I	3×10^{-8}	3×10^{-3}	1×10^{-9}	9×10^{-5}
Iodine (53)	I-125	S	5×10^{-9}	4×10^{-5}	8×10^{-11}	2×10^{-7}
		I	2×10^{-7}	6×10^{-3}	6×10^{-9}	2×10^{-4}
	I-126	S	8×10^{-9}	5×10^{-5}	9×10^{-11}	3×10^{-7}
		I	3×10^{-7}	3×10^{-3}	1×10^{-8}	9×10^{-5}
	I-129	S	2×10^{-9}	1×10^{-5}	2×10^{-11}	6×10^{-8}
		I	7×10^{-8}	6×10^{-3}	2×10^{-9}	2×10^{-4}
	I-131	S	9×10^{-9}	6×10^{-5}	1×10^{-10}	3×10^{-7}
		I	3×10^{-7}	2×10^{-3}	1×10^{-8}	6×10^{-5}
	I-132	S	2×10^{-7}	2×10^{-3}	3×10^{-9}	8×10^{-6}
		I	9×10^{-7}	5×10^{-3}	3×10^{-8}	2×10^{-4}
	I-133	S	3×10^{-8}	2×10	4×10^{-10}	1×10^{-6}
		I	2×10^{-7}	1×10^{-3}	7×10^{-9}	4×10^{-5}
	I-134	S	5×10^{-7}	4×10^{-3}	6×10^{-9}	2×10^{-5}
		I	3×10^{-6}	2×10^{-2}	1×10^{-7}	6×10^{-4}
	I-135	S	1×10^{-7}	7×10^{-4}	1×10^{-9}	4×10^{-6}
		I	4×10^{-7}	2×10^{-3}	1×10^{-8}	7×10^{-5}
Iridium (77)	Ir-190	S	1×10^{-6}	6×10^{-3}	4×10^{-8}	2×10^{-4}
		I	4×10^{-7}	5×10^{-3}	1×10^{-8}	2×10^{-4}
	Ir-192	S	1×10^{-7}	1×10^{-3}	4×10^{-9}	4×10^{-5}
		I	3×10^{-8}	1×10^{-3}	9×10^{-10}	4×10^{-5}
	Ir-194	S	2×10^{-7}	1×10^{-3}	8×10^{-9}	3×10^{-5}
		I	2×10^{-7}	9×10^{-4}	5×10^{-9}	3×10^{-5}
Iron (26)	Fe-55	S	9×10^{-7}	2×10^{-2}	3×10^{-8}	8×10^{-4}
		I	1×10^{-6}	7×10^{-2}	3×10^{-8}	2×10^{-3}
	Fe-59	S	1×10^{-7}	2×10^{-3}	5×10^{-9}	6×10^{-5}
		I	5×10^{-8}	2×10^{-3}	2×10^{-9}	5×10^{-5}
Krypton (36)	Kr-85m	Sub[17/]	6×10^{-6}	------	1×10^{-7}	-----
	Kr-85	Sub	1×10^{-5}	------	3×10^{-7}	-----
	Kr-87	Sub	1×10^{-6}	------	2×10^{-8}	-----
	Kr-88	Sub	1×10^{-6}	------	2×10^{-8}	-----

APPENDIX A **(Continued)**

CONCENTRATIONS IN AIR AND WATER ABOVE NATURAL BACKGROUND

(See notes at end of Appendix)

Element (atomic number)	Isotope[16/]		Table I Column 1 Air (μCi/ml)	Table I Column 2 Water (μCi/ml)	Table II Column 1 Air (μCi/ml)	Table II Column 2 Water (μCi/ml)
Lanthanum (57)	La-140	S	2×10^{-7}	7×10^{-4}	5×10^{-9}	2×10^{-5}
		I	1×10^{-7}	7×10^{-4}	4×10^{-9}	2×10^{-5}
Lead (82)	Pb-203	S	3×10^{-6}	1×10^{-2}	9×10^{-8}	4×10^{-4}
		I	2×10^{-6}	1×10^{-2}	6×10^{-8}	4×10^{-4}
	Pb-210	S	1×10^{-10}	4×10^{-6}	4×10^{-12}	1×10^{-7}
		I	2×10^{-10}	5×10^{-3}	8×10^{-12}	2×10^{-4}
	Pb-212	S	2×10^{-8}	6×10^{-4}	6×10^{-10}	2×10^{-5}
		I	2×10^{-8}	5×10^{-4}	7×10^{-10}	2×10^{-5}
Lutetium (71)	Lu-177	S	6×10^{-7}	3×10^{-3}	2×10^{-8}	1×10^{-4}
		I	5×10^{-7}	3×10^{-3}	2×10^{-8}	1×10^{-4}
Manganese (25)	Mn-52	S	2×10^{-7}	1×10^{-3}	7×10^{-9}	3×10^{-5}
		I	1×10^{-7}	9×10^{-4}	5×10^{-9}	3×10^{-5}
	Mn-54	S	4×10^{-7}	4×10^{-3}	1×10^{-8}	1×10^{-4}
		I	4×10^{-8}	3×10^{-3}	1×10^{-9}	1×10^{-4}
	Mn-56	S	8×10^{-7}	4×10^{-3}	3×10^{-8}	1×10^{-4}
		I	5×10^{-7}	3×10^{-3}	2×10^{-8}	1×10^{-4}
Mercury (80)	Hg-197m	S	7×10^{-7}	6×10^{-3}	3×10^{-8}	2×10^{-4}
		I	8×10^{-7}	5×10^{-3}	3×10^{-8}	2×10^{-4}
	Hg-197	S	1×10^{-6}	9×10^{-3}	4×10^{-8}	3×10^{-4}
		I	3×10^{-6}	1×10^{-2}	9×10^{-8}	5×10^{-4}
	Hg-203	S	7×10^{-8}	5×10^{-4}	2×10^{-9}	2×10^{-5}
		I	1×10^{-7}	3×10^{-3}	4×10^{-9}	1×10^{-4}
Molybdenum (42)	Mo-99	S	7×10^{-7}	5×10^{-3}	3×10^{-8}	2×10^{-4}
		I	2×10^{-7}	1×10^{-3}	7×10^{-9}	4×10^{-5}
Neodymium (60)	Nd-144	S	8×10^{-11}	2×10^{-3}	3×10^{-12}	7×10^{-5}
		I	3×10^{-10}	2×10^{-3}	1×10^{-11}	8×10^{-5}
	Nd-147	S	4×10^{-7}	2×10^{-3}	1×10^{-8}	6×10^{-5}
		I	2×10^{-7}	2×10^{-3}	8×10^{-9}	6×10^{-5}
	Nd-149	S	2×10^{-6}	8×10^{-3}	6×10^{-8}	3×10^{-4}
		I	1×10^{-6}	8×10^{-3}	5×10^{-8}	3×10^{-4}
Neptunium (93)	Np-237	S	4×10^{-12}	9×10^{-5}	1×10^{-13}	3×10^{-6}
		I	1×10^{-10}	9×10^{-4}	4×10^{-12}	3×10^{-5}
	Np-239	S	8×10^{-7}	4×10^{-3}	3×10^{-8}	1×10^{-4}
		I	7×10^{-7}	4×10^{-3}	2×10^{-8}	1×10^{-4}

APPENDIX A **(Continued)**

CONCENTRATIONS IN AIR AND WATER ABOVE NATURAL BACKGROUND

(See notes at end of Appendix)

Element (atomic number)	Isotope[16/]		Table I Column 1 Air (μCi/ml)	Table I Column 2 Water (μCi/ml)	Table II Column 1 Air (μCi/ml)	Table II Column 2 Water (μCi/ml)
Nickel (28)	Ni-59	S	5×10^{-7}	6×10^{-3}	2×10^{-8}	2×10^{-4}
		I	8×10^{-7}	6×10^{-2}	3×10^{-8}	2×10^{-4}
	Ni-63	S	6×10^{-8}	8×10^{-4}	2×10^{-9}	3×10^{-5}
		I	3×10^{-7}	2×10^{-2}	1×10^{-8}	7×10^{-4}
	Ni-65	S	9×10^{-7}	4×10^{-3}	3×10^{-8}	1×10^{-4}
		I	5×10^{-7}	3×10^{-3}	2×10^{-8}	1×10^{-4}
Niobium (41)	Nb-93m	S	1×10^{-7}	1×10^{-2}	4×10^{-9}	4×10^{-4}
		I	2×10^{-7}	1×10^{-2}	5×10^{-9}	4×10^{-4}
	Nb-95	S	5×10^{-7}	3×10^{-3}	2×10^{-8}	1×10^{-4}
		I	1×10^{-7}	3×10^{-3}	3×10^{-9}	1×10^{-4}
	Nb-97	S	6×10^{-6}	3×10^{-2}	2×10^{-7}	9×10^{-4}
		I	5×10^{-6}	3×10^{-2}	2×10^{-7}	9×10^{-4}
Osmium (76)	Os-185	S	5×10^{-7}	2×10^{-3}	2×10^{-8}	7×10^{-5}
		I	5×10^{-8}	2×10^{-3}	2×10^{-9}	7×10^{-5}
	Os-191m	S	2×10^{-5}	7×10^{-2}	6×10^{-7}	3×10^{-3}
		I	9×10^{-6}	7×10^{-2}	3×10^{-7}	2×10^{-3}
	Os-191	S	1×10^{-6}	5×10^{-3}	4×10^{-8}	2×10^{-4}
		I	4×10^{-7}	5×10^{-3}	1×10^{-8}	2×10^{-4}
	Os-193	S	4×10^{-7}	2×10^{-3}	1×10^{-8}	6×10^{-5}
		I	3×10^{-7}	2×10^{-3}	9×10^{-9}	5×10^{-5}
Palladium (46)	Pd-103	S	1×10^{-6}	1×10^{-2}	5×10^{-8}	3×10^{-4}
		I	7×10^{-7}	8×10^{-3}	3×10^{-8}	3×10^{-4}
	Pd-109	S	6×10^{-7}	3×10^{-3}	2×10^{-8}	9×10^{-5}
		I	4×10^{-7}	2×10^{-3}	1×10^{-8}	7×10^{-5}
Phosphorus (15)	P-32	S	7×10^{-8}	5×10^{-4}	2×10^{-9}	2×10^{-5}
		I	8×10^{-8}	7×10^{-4}	3×10^{-9}	2×10^{-5}
Platinum (78)	Pt-191	S	8×10^{-7}	4×10^{-3}	3×10^{-8}	1×10^{-4}
		I	6×10^{-7}	3×10^{-3}	2×10^{-8}	1×10^{-4}
	Pt-193m	S	7×10^{-6}	3×10^{-2}	2×10^{-8}	1×10^{-3}
		I	5×10^{-7}	3×10^{-2}	2×10^{-7}	1×10^{-3}
	Pt-193	S	1×10^{-6}	3×10^{-2}	4×10^{-8}	9×10^{-4}
		I	3×10^{-7}	5×10^{-2}	1×10^{-8}	2×10^{-3}
	Pt-197m	S	6×10^{-6}	3×10^{-2}	2×10^{-7}	1×10^{-3}
		I	5×10^{-6}	3×10^{-2}	2×10^{-7}	9×10^{-4}
	Pt-197	S	8×10^{-7}	4×10^{-3}	3×10^{-8}	1×10^{-4}
		I	6×10^{-7}	3×10^{-3}	2×10^{-8}	1×10^{-4}

APPENDIX A (Continued)

CONCENTRATIONS IN AIR AND WATER ABOVE NATURAL BACKGROUND

(See notes at end of Appendix)

Element (atomic number)	Isotope[16/]		Table I Column 1 Air (μCi/ml)	Table I Column 2 Water (μCi/ml)	Table II Column 1 Air (μCi/ml)	Table II Column 2 Water (μCi/ml)
Plutonium (94)	Pu-238	S	2×10^{-12}	1×10^{-4}	7×10^{-14}	5×10^{-6}
		I	3×10^{-11}	8×10^{-4}	1×10^{-12}	3×10^{-5}
	Pu-239	S	2×10^{-12}	1×10^{-4}	6×10^{-14}	5×10^{-6}
		I	4×10^{-11}	8×10^{-4}	1×10^{-12}	3×10^{-5}
	Pu-240	S	2×10^{-12}	1×10^{-4}	6×10^{-14}	5×10^{-6}
		I	4×10^{-11}	8×10^{-4}	1×10^{-12}	3×10^{-5}
	Pu-241	S	9×10^{-11}	7×10^{-3}	3×10^{-12}	2×10^{-4}
		I	4×10^{-8}	4×10^{-2}	1×10^{-9}	1×10^{-3}
	Pu-242	S	2×10^{-12}	1×10^{-4}	6×10^{-14}	5×10^{-6}
		I	4×10^{-11}	9×10^{-4}	1×10^{-12}	3×10^{-5}
	Pu-243	S	2×10^{-6}	1×10^{-2}	6×10^{-8}	3×10^{-4}
		I	2×10^{-6}	1×10^{-2}	8×10^{-8}	3×10^{-4}
	Pu-244	S	2×10^{-12}	1×10^{-4}	6×10^{-14}	4×10^{-6}
		I	3×10^{-11}	3×10^{-4}	1×10^{-12}	1×10^{-5}
Polonium (84)	Po-210	S	5×10^{-10}	2×10^{-5}	2×10^{-11}	7×10^{-7}
		I	2×10^{-10}	8×10^{-4}	7×10^{-12}	3×10^{-5}
Potassium (19)	K-42	S	2×10^{-6}	9×10^{-3}	7×10^{-8}	3×10^{-4}
		I	1×10^{-7}	6×10^{-4}	4×10^{-9}	2×10^{-5}
Praseodymium (59)						
	Pr-142	S	2×10^{-7}	9×10^{-4}	7×10^{-9}	3×10^{-5}
		I	2×10^{-7}	9×10^{-4}	5×10^{-9}	3×10^{-5}
	Pr-143	S	3×10^{-7}	1×10^{-3}	1×10^{-8}	5×10^{-5}
		I	2×10^{-7}	1×10^{-3}	6×10^{-9}	5×10^{-5}
Promethium (61)						
	Pm-147	S	6×10^{-8}	6×10^{-3}	2×10^{-9}	2×10^{-4}
		I	1×10^{-7}	6×10^{-3}	3×10^{-9}	2×10^{-4}
	Pm-149	S	3×10^{-7}	1×10^{-3}	1×10^{-8}	4×10^{-5}
		I	2×10^{-7}	1×10^{-3}	8×10^{-9}	4×10^{-5}
Protoactinium (91)						
	Pa-230	S	2×10^{-9}	7×10^{-3}	6×10^{-11}	2×10^{-4}
		I	8×10^{-10}	7×10^{-3}	3×10^{-11}	2×10^{-4}
	Pa-231	S	1×10^{-12}	3×10^{-5}	4×10^{-14}	9×10^{-7}
		I	1×10^{-10}	8×10^{-4}	4×10^{-12}	2×10^{-5}
	Pa-233	S	6×10^{-7}	4×10^{-3}	2×10^{-8}	1×10^{-4}
		I	2×10^{-7}	3×10^{-3}	6×10^{-9}	1×10^{-4}
Radium (88)	Ra-233	S	2×10^{-9}	2×10^{-5}	6×10^{-11}	7×10^{-7}
		I	2×10^{-10}	1×10^{-4}	8×10^{-12}	4×10^{-6}
	Ra-224	S	5×10^{-9}	7×10^{-5}	2×10^{-10}	2×10^{-6}
		I	7×10^{-10}	2×10^{-4}	2×10^{-11}	5×10^{-6}

APPENDIX A (Continued)

CONCENTRATIONS IN AIR AND WATER ABOVE NATURAL BACKGROUND

(See notes at end of Appendix)

Element (atomic number)	Isotope[16/]		Table I Column 1 Air (μCi/ml)	Table I Column 2 Water (μCi/ml)	Table II Column 1 Air (μCi/ml)	Table II Column 2 Water (μCi/ml)
Radium (88) (Cont'd)	Ra-226	S	3×10^{-11}	4×10^{-7}	3×10^{-12}	3×10^{-8}
		I	5×10^{-11}	9×10^{-4}	2×10^{-12}	3×10^{-5}
	Ra-228	S	7×10^{-11}	8×10^{-7}	2×10^{-12}	3×10^{-8}
		I	4×10^{-11}	7×10^{-4}	1×10^{-12}	3×10^{-5}
Radon (86)	Rn-220	S	3×10^{-7}	------	1×10^{-8}	------
	------		------	------	-----	------
	Rn-222[18/]	S	3×10^{-8}	------	3×10^{-9}	------
Rhenium (75)	Re-183	S	3×10^{-6}	2×10^{-2}	9×10^{-8}	6×10^{-4}
		I	2×10^{-7}	8×10^{-3}	5×10^{-9}	3×10^{-4}
	Re-186	S	6×10^{-7}	3×10^{-3}	2×10^{-8}	9×10^{-5}
		I	2×10^{-7}	1×10^{-3}	8×10^{-9}	5×10^{-5}
	Re-187	S	9×10^{-6}	7×10^{-2}	3×10^{-7}	3×10^{-3}
		I	5×10^{-7}	4×10^{-2}	2×10^{-8}	2×10^{-3}
	Re-188	S	4×10^{-7}	2×10^{-3}	1×10^{-8}	6×10^{-5}
		I	2×10^{-7}	9×10^{-4}	6×10^{-9}	3×10^{-5}
Rhodium (45)	Rh-103m	S	8×10^{-5}	4×10^{-1}	3×10^{-6}	1×10^{-2}
		I	6×10^{-5}	3×10^{-1}	2×10^{-6}	1×10^{-2}
	Rh-105	S	8×10^{-7}	4×10^{-3}	3×10^{-8}	1×10^{-4}
		I	5×10^{-7}	3×10^{-3}	2×10^{-8}	1×10^{-4}
Rubidium (37)	Rb-86	S	3×10^{-7}	2×10^{-3}	1×10^{-8}	7×10^{-5}
		I	7×10^{-3}	7×10^{-4}	2×10^{-9}	2×10^{-5}
	Rb-87	S	5×10^{-7}	3×10^{-3}	2×10^{-8}	1×10^{-4}
		I	7×10^{-8}	5×10^{-3}	2×10^{-9}	2×10^{-4}
Ruthenium (44)	Ru-97	S	2×10^{-6}	1×10^{-2}	8×10^{-8}	4×10^{-4}
		I	2×10^{-6}	1×10^{-2}	6×10^{-8}	3×10^{-4}
	Ru-103	S	5×10^{-7}	2×10^{-3}	2×10^{-8}	8×10^{-5}
		I	8×10^{-8}	2×10^{-3}	3×10^{-9}	8×10^{-5}
	Ru-105	S	7×10^{-7}	3×10^{-3}	2×10^{-8}	1×10^{-4}
		I	5×10^{-7}	3×10^{-3}	2×10^{-8}	1×10^{-4}
	Ru-106	S	8×10^{-8}	4×10^{-4}	3×10^{-9}	1×10^{-5}
		I	6×10^{-9}	3×10^{-4}	2×10^{-10}	1×10^{-5}
Rhenium (75)	Sm-147	S	7×10^{-11}	2×10^{-3}	2×10^{-12}	6×10^{-5}
		I	3×10^{-10}	2×10^{-3}	9×10^{-12}	7×10^{-5}
	Sm-151	S	6×10^{-8}	1×10^{-2}	2×10^{-9}	4×10^{-4}
		I	1×10^{-7}	1×10^{-2}	5×10^{-9}	4×10^{-4}
	Sm-153	S	5×10^{-7}	2×10^{-3}	2×10^{-8}	8×10^{-5}
		I	4×10^{-7}	2×10^{-3}	1×10^{-8}	8×10^{-5}

APPENDIX A (Continued)

CONCENTRATIONS IN AIR AND WATER ABOVE NATURAL BACKGROUND

(See notes at end of Appendix)

Element (atomic number)	Isotope[16/]		Table I Column 1 Air (μCi/ml)	Table I Column 2 Water (μCi/ml)	Table II Column 1 Air (μCi/ml)	Table II Column 2 Water (μCi/ml)
Scandium (21)	Sc-46	S	2×10^{-7}	1×10^{-3}	8×10^{-9}	4×10^{-5}
		I	2×10^{-8}	1×10^{-10}	8×10^{-10}	4×10^{-5}
	Sc-47	S	6×10^{-7}	3×10^{-3}	2×10^{-8}	9×10^{-5}
		I	5×10^{-7}	3×10^{-3}	2×10^{-8}	9×10^{-5}
	Sc-48	S	2×10^{-7}	8×10^{-4}	6×10^{-9}	3×10^{-5}
		I	1×10^{-7}	8×10^{-4}	5×10^{-9}	3×10^{-5}
Selenium (34)	Se-75	S	1×10^{-6}	9×10^{-3}	4×10^{-8}	3×10^{-4}
		I	1×10^{-7}	8×10^{-3}	4×10^{-9}	3×10^{-4}
Silicon (14)	Si-31	S	6×10^{-6}	3×10^{-2}	2×10^{-7}	9×10^{-4}
		I	1×10^{-6}	6×10^{-3}	3×10^{-8}	2×10^{-4}
Silver (47)	Ag-105	S	6×10^{-7}	3×10^{-3}	2×10^{-8}	1×10^{-4}
		I	8×10^{-8}	3×10^{-3}	3×10^{-9}	1×10^{-4}
	Ag-110m	S	2×10^{-7}	9×10^{-4}	7×10^{-9}	3×10^{-5}
		I	1×10^{-8}	9×10^{-4}	3×10^{-10}	3×10^{-5}
	Ag-111	S	3×10^{-7}	1×10^{-3}	1×10^{-8}	4×10^{-5}
		I	2×10^{-7}	1×10^{-3}	8×10^{-9}	4×10^{-5}
Sodium (11)	Na-22	S	2×10^{-7}	1×10^{-3}	6×10^{-9}	4×10^{-5}
		I	9×10^{-9}	9×10^{-4}	3×10^{-10}	3×10^{-5}
	Na-24	S	1×10^{-6}	6×10^{-3}	4×10^{-8}	2×10^{-4}
		I	1×10^{-7}	8×10^{-4}	5×10^{-9}	3×10^{-5}
Strontium (38)	Sr-85m	S	4×10^{-5}	2×10^{-1}	1×10^{-6}	7×10^{-3}
		I	3×10^{-5}	2×10^{-1}	1×10^{-6}	7×10^{-3}
	Sr-85	S	2×10^{-7}	3×10^{-3}	8×10^{-9}	1×10^{-4}
		I	1×10^{-7}	5×10^{-3}	4×10^{-9}	2×10^{-4}
	Sr-89	S	3×10^{-8}	3×10^{-4}	3×10^{-10}	3×10^{-6}
		I	4×10^{-8}	8×10^{-4}	1×10^{-9}	3×10^{-5}
	Sr-90	S	1×10^{-9}	1×10^{-5}	3×10^{-11}	3×10^{-7}
		I	5×10^{-9}	1×10^{-3}	2×10^{-10}	4×10^{-5}
	Sr-91	S	4×10^{-7}	2×10^{-3}	2×10^{-8}	7×10^{-5}
		I	3×10^{-7}	1×10^{-3}	9×10^{-9}	5×10^{-5}
	Sr-92	S	4×10^{-7}	2×10^{-3}	2×10^{-8}	7×10^{-5}
		I	3×10^{-7}	2×10^{-3}	1×10^{-8}	6×10^{-5}
Sulfur (16)	S-35	S	3×10^{-7}	2×10^{-3}	9×10^{-9}	6×10^{-5}
		I	3×10^{-7}	8×10^{-3}	9×10^{-9}	3×10^{-4}
Tantalum (73)	Ta-182	S	4×10^{-8}	1×10^{-3}	1×10^{-9}	4×10^{-5}
		I	2×10^{-8}	1×10^{-3}	7×10^{-10}	4×10^{-5}

APPENDIX A (Continued)

CONCENTRATIONS IN AIR AND WATER ABOVE NATURAL BACKGROUND

(See notes at end of Appendix)

Element (atomic number)	Isotope[16/]		Table I Column 1 Air (μCi/ml)	Table I Column 2 Water (μCi/ml)	Table II Column 1 Air (μCi/ml)	Table II Column 2 Water (μCi/ml)
Technetium (43)	Tc-96m	S	8×10^{-5}	4×10^{-1}	3×10^{-6}	1×10^{-2}
		I	3×10^{-5}	3×10^{-1}	1×10^{-6}	1×10^{-2}
	Tc-96	S	6×10^{-7}	3×10^{-3}	2×10^{-8}	1×10^{-4}
		I	2×10^{-7}	1×10^{-3}	8×10^{-9}	5×10^{-5}
	Tc-97m	S	2×10^{-6}	1×10^{-2}	8×10^{-8}	4×10^{-4}
		I	2×10^{-7}	5×10^{-3}	5×10^{-9}	2×10^{-4}
	Tc-97	S	1×10^{-5}	5×10^{-2}	4×10^{-7}	2×10^{-3}
		I	3×10^{-7}	2×10^{-2}	1×10^{-8}	8×10^{-4}
	Tc-99m	S	4×10^{-5}	2×10^{-1}	1×10^{-6}	6×10^{-3}
		I	1×10^{-5}	8×10^{-2}	5×10^{-7}	3×10^{-3}
	Tc-99	S	2×10^{-6}	1×10^{-2}	7×10^{-8}	3×10^{-4}
		I	6×10^{-8}	5×10^{-3}	2×10^{-9}	2×10^{-4}
Tellurium (52)	Te-125m	S	4×10^{-7}	5×10^{-3}	1×10^{-8}	2×10^{-4}
		I	1×10^{-7}	3×10^{-3}	4×10^{-9}	1×10^{-4}
	Te-127m	S	1×10^{-7}	2×10^{-3}	5×10^{-9}	6×10^{-5}
		I	4×10^{-8}	2×10^{-3}	1×10^{-9}	5×10^{-5}
	Te-127	S	2×10^{-6}	8×10^{-3}	6×10^{-8}	3×10^{-4}
		I	9×10^{-7}	5×10^{-3}	3×10^{-8}	2×10^{-4}
	Te-129m	S	8×10^{-8}	1×10^{-3}	3×10^{-9}	3×10^{-5}
		I	3×10^{-8}	6×10^{-4}	1×10^{-9}	2×10^{-5}
	Te-129	S	5×10^{-6}	2×10^{-2}	2×10^{-7}	8×10^{-4}
		I	4×10^{-6}	2×10^{-2}	1×10^{-7}	8×10^{-4}
	Te-131m	S	4×10^{-7}	2×10^{-3}	1×10^{-8}	6×10^{-5}
		I	2×10^{-7}	1×10^{-3}	6×10^{-9}	4×10^{-5}
	Te-132	S	2×10^{-7}	9×10^{-4}	7×10^{-9}	3×10^{-5}
		I	1×10^{-7}	6×10^{-4}	4×10^{-9}	2×10^{-5}
Terbium (65)	Tb-160	S	1×10^{-7}	1×10^{-3}	3×10^{-9}	4×10^{-5}
		I	3×10^{-8}	1×10^{-3}	1×10^{-9}	4×10^{-5}
Thallium (81)	Tl-200	S	3×10^{-6}	1×10^{-2}	9×10^{-8}	4×10^{-4}
		I	1×10^{-6}	7×10^{-3}	4×10^{-8}	2×10^{-4}
	Tl-201	S	2×10^{-6}	9×10^{-3}	7×10^{-8}	3×10^{-4}
		I	9×10^{-7}	5×10^{-3}	3×10^{-8}	2×10^{-4}
	Tl-202	S	8×10^{-7}	4×10^{-3}	3×10^{-8}	1×10^{-4}
		I	2×10^{-7}	2×10^{-3}	8×10^{-9}	7×10^{-5}
	Tl-204	S	6×10^{-7}	3×10^{-3}	2×10^{-8}	1×10^{-4}
		I	3×10^{-8}	2×10^{-3}	9×10^{-10}	6×10^{-5}
Thorium (90)	Th-227	S	3×10^{-10}	5×10^{-4}	1×10^{-11}	2×10^{-5}
		I	2×10^{-10}	5×10^{-4}	6×10^{-12}	2×10^{-5}
	Th-228	S	9×10^{-12}	2×10^{-4}	3×10^{-13}	7×10^{-6}
		I	6×10^{-12}	4×10^{-4}	2×10^{-13}	1×10^{-5}

APPENDIX A (Continued)

CONCENTRATIONS IN AIR AND WATER ABOVE NATURAL BACKGROUND

(See notes at end of Appendix)

Element (atomic number)	Isotope[16/]		Table I Column 1 Air (μCi/ml)	Table I Column 2 Water (μCi/ml)	Table II Column 1 Air (μCi/ml)	Table II Column 2 Water (μCi/ml)
Thorium (90) (Cont'd)	Th-230	S	2×10^{-12}	5×10^{-5}	8×10^{-14}	2×10^{-6}
		I	1×10^{-11}	9×10^{-4}	3×10^{-13}	3×10^{-5}
	Th-231	S	1×10^{-6}	7×10^{-3}	5×10^{-8}	2×10^{-4}
		I	1×10^{-6}	7×10^{-3}	4×10^{-8}	2×10^{-4}
	Th-232	S	3×10^{-11}	5×10^{-5}	1×10^{-12}	2×10^{-6}
		I	3×10^{-11}	1×10^{-3}	1×10^{-12}	4×10^{-5}
	Th-natural	S	6×10^{-11}	6×10^{-5}	2×10^{-12}	2×10^{-6}
		I	6×10^{-11}	6×10^{-4}	2×10^{-12}	2×10^{-5}
Thorium (90)	Th-234	S	6×10^{-8}	5×10^{-4}	2×10^{-9}	2×10^{-5}
		I	3×10^{-8}	5×10^{-4}	1×10^{-9}	2×10^{-5}
Thulium (69)	Tm-170	S	4×10^{-8}	1×10^{-3}	1×10^{-9}	5×10^{-5}
		I	3×10^{-8}	1×10^{-3}	1×10^{-9}	5×10^{-5}
	Tm-171	S	1×10^{-7}	1×10^{-2}	4×10^{-9}	5×10^{-4}
		I	2×10^{-7}	1×10^{-2}	8×10^{-9}	5×10^{-4}
Tin (50)	Sn-113	S	4×10^{-7}	2×10^{-3}	1×10^{-8}	9×10^{-5}
		I	5×10^{-8}	2×10^{-3}	2×10^{-9}	8×10^{-5}
	Sn-125	S	1×10^{-7}	5×10^{-4}	4×10^{-9}	2×10^{-5}
		I	8×10^{-8}	5×10^{-4}	3×10^{-9}	2×10^{-5}
Tungsten (74)	W-181	S	2×10^{-6}	1×10^{-2}	8×10^{-8}	4×10^{-4}
		I	1×10^{-7}	1×10^{-2}	4×10^{-9}	3×10^{-4}
	W-185	S	8×10^{-7}	4×10^{-3}	3×10^{-8}	1×10^{-4}
		I	1×10^{-7}	3×10^{-3}	4×10^{-9}	1×10^{-4}
	W-187	S	4×10^{-7}	2×10^{-3}	2×10^{-8}	7×10^{-5}
		I	3×10^{-7}	2×10^{-3}	1×10^{-8}	6×10^{-5}
Uranium (92)	U-230	S	3×10^{-10}	1×10^{-4}	1×10^{-11}	5×10^{-6}
		I	1×10^{-10}	1×10^{-4}	4×10^{-12}	5×10^{-6}
	U-232	S	1×10^{-10}	8×10^{-4}	3×10^{-12}	3×10^{-5}
		I	3×10^{-11}	8×10^{-4}	9×10^{-13}	3×10^{-5}
	U-233	S	5×10^{-10}	9×10^{-4}	2×10^{-11}	3×10^{-5}
		I	1×10^{-10}	9×10^{-4}	4×10^{-12}	3×10^{-5}
	U-234	S[19/]	6×10^{-10}	9×10^{-4}	2×10^{-11}	3×10^{-5}
		I	1×10^{-10}	9×10^{-4}	4×10^{-12}	3×10^{-5}
	U-235	S[19/]	5×10^{-10}	8×10^{-4}	2×10^{-11}	3×10^{-5}
		I	1×10^{-10}	8×10^{-4}	4×10^{-12}	3×10^{-5}
	U-236	S	6×10^{-10}	1×10^{-3}	4×10^{-12}	3×10^{-5}
		I	1×10^{-10}	1×10^{-3}	4×10^{-12}	3×10^{-5}
	U-238	S[19/]	7×10^{-11}	1×10^{-3}	3×10^{-12}	4×10^{-5}

APPENDIX A (Continued)

CONCENTRATIONS IN AIR AND WATER ABOVE NATURAL BACKGROUND

(See notes at end of Appendix)

Element (atomic number)	Isotope[16/]		Table I Column 1 Air (μCi/ml)	Table I Column 2 Water (μCi/ml)	Table II Column 1 Air (μCi/ml)	Table II Column 2 Water (μCi/ml)
Uranium (92)		I	1×10^{-10}	1×10^{-3}	5×10^{-12}	4×10^{-5}
(Cont'd)	U-240	S	2×10^{-7}	1×10^{-3}	8×10^{-9}	3×10^{-5}
		I	2×10^{-7}	1×10^{-3}	6×10^{-9}	3×10^{-5}
	U-natural	S[19/]	$1 \times 10-^{10}$	1×10^{-3}	5×10^{-12}	3×10^{-5}
		I	1×10^{-10}	1×10^{-3}	5×10^{-12}	3×10^{-5}
Vanadium (23)	V-48	S	2×10^{-7}	9×10^{-4}	6×10^{-9}	3×10^{-5}
		I	6×10^{-8}	8×10^{-4}	2×10^{-9}	3×10^{-5}
Xenon (54)	Xe-131m					
		Sub[17/]	$2 \times 10-^{5}$	------	4×10^{-7}	------
	Xe-131	Sub	1×10^{-5}	------	3×10^{-7}	------
	Xe-133	Sub	1×10^{-5}	------	3×10^{-7}	------
	Xe-135	Sub	4×10^{-6}	------	1×10^{-7}	------
Ytterbium(70)	Yb-175	S	7×10^{-7}	3×10^{-3}	2×10^{-8}	1×10^{-4}
		I	6×10^{-7}	3×10^{-3}	2×10^{-8}	1×10^{-4}
Yttrium (39)	Y-88*	S	3×10^{-7}	2×10^{-3}	6×10^{-9}	7×10^{-5}
		I	5×10^{-8}	3×10^{-3}	2×10^{-9}	9×10^{-5}
	Y-90	S	1×10^{-7}	6×10^{-4}	4×10^{-9}	2×10^{-5}
		I	1×10^{-7}	6×10^{-4}	3×10^{-9}	2×10^{-5}
	Y-91m	S	2×10^{-5}	1×10^{-1}	8×10^{-7}	3×10^{-3}
		I	2×10^{-5}	1×10^{-1}	6×10^{-7}	3×10^{-3}
	Y-91	S	4×10^{-8}	8×10^{-4}	1×10^{-9}	3×10^{-5}
		I	3×10^{-8}	8×10^{-4}	1×10^{-9}	3×10^{-5}
	Y-92	S	4×10^{-7}	2×10^{-3}	1×10^{-8}	6×10^{-5}
		I	3×10^{-7}	2×10^{-3}	1×10^{-8}	6×10^{-5}
	Y-93	S	2×10^{-7}	8×10^{-4}	6×10^{-9}	3×10^{-5}
		I	1×10^{-7}	8×10^{-4}	5×10^{-9}	3×10^{-5}
Zinc (30)	Zn-65	S	1×10^{-7}	3×10^{-3}	4×10^{-9}	1×10^{-4}
		I	6×10^{-8}	5×10^{-3}	2×10^{-9}	2×10^{-4}
	Zn-69m	S	4×10^{-7}	2×10^{-3}	1×10^{-8}	7×10^{-5}
		I	3×10^{-7}	2×10^{-3}	1×10^{-8}	6×10^{-5}
	Zn-69	S	7×10^{-6}	5×10^{-2}	2×10^{-7}	2×10^{-3}
		I	9×10^{-6}	5×10^{-2}	3×10^{-7}	2×10^{-3}
Zirconium (40)	Zr-93	S	1×10^{-7}	2×10^{-2}	4×10^{-9}	8×10^{-4}
		I	3×10^{-7}	2×10^{-2}	1×10^{-8}	8×10^{-4}
	Zr-95	S	1×10^{-7}	2×10^{-3}	4×10^{-9}	6×10^{-5}
		I	3×10^{-8}	2×10^{-3}	1×10^{-9}	6×10^{-5}
	Zr-97	S	1×10^{-7}	5×10^{-4}	4×10^{-9}	2×10^{-5}
		I	9×10^{-8}	5×10^{-4}	3×10^{-9}	2×10^{-5}

APPENDIX A **(Continued)**

CONCENTRATIONS IN AIR AND WATER ABOVE NATURAL BACKGROUND

(See notes at end of Appendix)

Element (atomic number)	Isotope[16/]	Table I Column 1 Air (μCi/ml)	Table I Column 2 Water (μCi/ml)	Table II Column 1 Air (μCi/ml)	Table II Column 2 Water (μCi/ml)
Any single radio-nuclide not listed above with decay mode other than alpha emission or spontaneous fission and with radioactive half-life less than 2 hours.	Sub[17/]	1×10^{-6}	------	3×10^{-8}	-------
Any single radio-nuclide not listed above with decay mode other than alpha emission or spontaneous fission and with radioactive half-life greater than 2 hours.		3×10^{-9}	9×10^{-5}	1×10^{-10}	3×10^{-6}
Any single radio-nuclide not listed above, which decays by alpha emission or spontaneous fission.		6×10^{-13}	4×10^{-7}	2×10^{-14}	3×10^{-8}

* The values for Ge-98, Au-195 and Y-88 have been calculated using the committed dose equivalent values of ICRP Publication 30 for the controlling organ.

APPENDIX A (Continued)

CONCENTRATIONS IN AIR AND WATER ABOVE NATURAL BACKGROUND
(See notes at end of Appendix)

Footnotes continued:

Maximum Time Between Collection and Measurement (hours)[18a/] disintegrations	Alpha-Emitting Daughter Activity Collected Per Milliliter of Air	
	Microcuries/ml	Total alpha per minute per ml
0.5	7.2×10^{-8}	0.16
1.0	4.5×10^{-8}	0.10
2.0	1.3×10^{-8}	0.028
3.	0.3×10^{-8}	0.0072

NOTE: In any case where there is a mixture in air or water of more than one radionuclide, the limiting values for purposes of this Appendix should be determined as follows.

1. If the identity and concentration of each radionuclide in the mixture are known, the limiting values should be derived as follows: Determine, for each radionuclide in the mixture, the ratio between the quantity present in the mixture and the limit otherwise established in Appendix "A" for the specific radionuclide when not in a mixture. The sum of such ratios for all the radionuclides in the mixture may not exceed "I" (i.e., "unity").

   Example: If radionuclides a, b and c are present in concentrations C_a, C_b and C_c, and if the applicable MPC's are MPC_a, MPC_b and MPC_c respectively, then the concentrations shall be limited so that the following relationship exists:

$$\frac{C_a}{MPC_a} + \frac{C_b}{MPC_b} + \frac{C_c}{MPC_c} = 1$$

2. If either the identity or the concentration of any radionuclide in the mixture is not known, the limiting values for purposes of Appendix "A" shall be:

   a. For purposes of Table I, Column 1: 6×10^{-13}
   b. For purposes of Table I, Column 2: 4×10^{-7}
   c. For purposes of Table II, Column 1: 2×10^{-14}
   d. For purposes of Table II, Column 2: 3×10^{-8}

APPENDIX A (Continued)

CONCENTRATIONS IN AIR AND WATER ABOVE NATURAL BACKGROUND
(See notes at end of Appendix)

3. If any of the conditions specified below are met, the corresponding values specified below may be used in lieu of those specified in Paragraph 2 above.

   a. If the identity of each radionuclide in the mixture is known but the concentration of one or more of the radionuclides in the mixture is not known, the concentration limit for the mixture is the limit specified in Appendix "A" for the radionuclide in the mixture having the lowest concentration limit; or,

   b. If the identity of each radionuclide in the mixture is not known, but it is known that certain radionuclides specified in Appendix "A" are not present in the mixture, the concentration limit for the mixture is the lowest concentration limit specified in Appendix "A" for any radionuclide which is not known to be absent from the mixture; or,

		Table I		Table II	
Element (atomic number)	Isotope[16/]	Column 1 Air (µCi/ml)	Column 2 Water (µCi/ml)	Column 1 Air (µCi/ml)	Column 2 Water (µCi/ml)
If it is known that Sr-90, I-125, I-126, I-129, I-131, I-133 (Table II only), Pb-210, Po-210, At-211, Ra-223, Ra-224, Ra-226, Ac-227, Ra-228, Th-230, Pa-231, Th-232, Th-nat, Cm-248, Cf-254 and Fm-256 are not present		--------	9×10^{-5}	--------	3×10^{-6}

APPENDIX A (Continued)

CONCENTRATIONS IN AIR AND WATER ABOVE NATURAL BACKGROUND
(See notes at end of Appendix)

Element (atomic number)	Isotope[16/]	Table I Column 1 Air (µCi/ml)	Table I Column 2 Water (µCi/ml)	Table II Column 1 Air (µCi/ml)	Table II Column 2 Water (µCi/ml)
If it is known that Sr-90, I-125, I-126, I-129, I-131, (I-133, Table II only), Pb-210, Po-210, Ra-223, Ra-226, Ra-228, Pa-231, Th-nat, Cm-248, Cf-254 and Fm-256 are not present		--------	6×10^{-5}	--------	2×10^{-6}
If it is known that Sr-90, I-129, (I-125, I-126, I-131, Table II only), Pb-210, Ra-226, Ra-228, Cm-248 and Cf-254 are not present		--------	2×10^{-5}	--------	6×10^{-7}
If it is known that (I-129, Table II only), Ra-226 and Ra-228 are not present		--------	3×10^{-6}	--------	1×10^{-7}
If it is known that alpha-emitters and Sr-90, I-129, Pb-210, Ac-227, Ra-228, Pa-230, Pu-241 and Bk-249 are not present		3×10^{-9}	--------	1×10^{-10}	-------
If it is known that alpha-emitters and Pb-210, Ac-227, Ra-228 and Pu-241 are not present		3×10^{-10}	--------	1×10^{-11}	--------
If it is known that alpha-emitters and Ac-227 are not present		3×10^{-11}	--------	1×10^{-12}	--------

RH-2200. (Cont'd)

APPENDIX A **(Continued)**

CONCENTRATIONS IN AIR AND WATER ABOVE NATURAL BACKGROUND

(See notes at end of Appendix)

Element (atomic number)	Isotope[16/]	Table I Column 1 Air (μCi/ml)	Table I Column 2 Water (μCi/ml)	Table II Column 1 Air (μCi/ml)	Table II Column 2 Water (μCi/ml)
If it is known that Ac-227, Th-230, Pa-231, Pu-238, Pu-239, Pu-240, Pu-242, Pu-244, Cm-248, Cf-249 and Cf-251 are not present		3×10^{-12}	--------	1×10^{-13}	--------

4. If the mixture of radionuclides consists of Uranium and its daughter products in ore dust prior to chemical processing of the Uranium ore, the values specified below may be used in lieu of those determined in accordance with Paragraph 1 above or those specified in Paragraphs 2 and 3 above.

   a. For purposes of Table I, Column 1, 1×10^{-10} μc/ml gross alpha activity; or 5×10^{-11} μc/ml natural Uranium; or 75 micrograms per cubic meter of air natural Uranium.

   b. For purposes of Table II, Column 1, 3×10^{-12} μc/ml gross alpha activity; or 2×10^{-13} μc/ml natural Uranium; or 3 micrograms per cubic meter of air natural Uranium.

5. For purposes of this note, a radionuclide may be considered as not present in a mixture if:

   a. The ratio of the concentration of that radionuclide in the mixture (C_a) to the concentration limit for that radionuclide in Table II of Appendix A (MPC_a) does not exceed 1/10, i.e.,

$$\frac{C_a}{MPC_a} < \frac{1}{10}$$

   and

   b. The sum of all radionuclides considered as not present in the mixture does not exceed 1/4, i.e.:

$$\frac{C_a}{MPC_a} + \frac{C_b}{MPC_b} + \ldots \leq \frac{1}{4}$$

RH-2201.-
RH-2299. Reserved

RH-2300. **Appendix B.** (For use in RH-409, RH-1303, RH-1402 and RH-1403)

Material	Microcuries	Material	Microcuries

Americium 241	0.01	Germanium 71	100
Antimony 122	100	Gold 195	10
Antimony 124	10	Gold 198	100
Antimony 125	10	Gold 199	100
Arsenic 73	100	Hafnium 181	10
Arsenic 74	10	Holmium 166	100
Arsenic 76	10	Hydrogen 3	1,000
Arsenic 77	100	Indium 111	100
Barium 131	10	Indium 113m	100
Barium 133	10	Indium 114m	10
Barium 140	10	Indium 115m	100
Bismuth 210	1	Indium 115	10
Bromine 82	10	Iodine 123	100
Cadmium 109	10	Iodine 125	1
Cadmium 115m	10	Iodine 126	1
Cadmium 115	100	Iodine 129	0.1
Calcium 45	10	Iodine 131	1
Calcium 47	10	Iodine 132	10
Carbon 14	100	Iodine 133	1
Cerium 141	100	Iodine 134	10
Cerium 143	100	Iodine 135	10
Cerium 144	1	Iridium 192	10
Cesium 129	100	Iridium 194	100
Cesium 131	1,000	Iron 54	10
Cesium 134m	100	Iron 55	100
Cesium 134	1	Iron 59	10
Cesium 135	10	Krypton 85	100
Cesium 136	10	Krypton 87	10
Cesium 137	10	Lanthanum 140	10
Chlorine 36	10	Lutetium 177	100
Chlorine 38	10	Manganese 52	10
Chromium 51	1,000	Manganese 54	10
Cobalt 57	100	Manganese 56	10
Cobalt 58m	10	Mercury 197m	100
Cobalt 58	10	Mercury 197	100
Cobalt 60	1	Mercury 203	10
Copper 64	100	Molybdenum 99	100
Dysprosium 165	10	Neodymium 147	100
Dysprosium 166	100	Neodymium 149	100
Erbium 169	100	Nickel 59	100
Erbium 171	100	Nickel 63	10
Europium 152 9.2h	100	Nickel 65	100
Europium 152 13yr	1	Niobium 93m	10
Europium 154	1	Niobium 95	10
Europium 155	10	Niobium 97	10
Fluorine 18	1,000	Osmium 185	100
Gadolinium 153	10	Osmium 191m	100
Gadolinium 159	100	Osmium 191	100
Gallium 67	100	Osmium 193	100
Gallium 72	10	Palladium 103	100
Germanium 68	10	Palladium 109	100

RH-2300. **Appendix B.** (Continued)

Material	Microcuries	Material	Microcuries

Phosphorus 32	10	Technetium 99	10
Platinum 191	100	Tellurium 125m	10
Platinum 193m	100	Tellurium 127m	10
Platinum 193	100	Tellurium 127	100
Platinum 197m	100	Tellurium 129m	10
Platinum 197	100	Tellurium 129	100
Plutonium 239	0.01	Tellurium 131m	10
Polonium 210	0.1	Tellurium 132	10
Potassium 42	10	Terbium 160	10
Potassium 43	10	Thallium 200	100
Praseodymium 142	100	Thallium 201	100
Praseodymium 143	100	Thallium 202	100
Promethium 147	10	Thallium 204	10
Promethium 149	10	Thorium (natural)[20/]	100
Radium 226	0.01	Thulium 170	10
Rhenium 186	100	Thulium 171	10
Rhenium 188	100	Tin 113	10
Rhodium 103m	100	Tin 125	10
Rhodium 105	100	Tungsten 181	10
Rubidium 81	10	Tungsten 185	10
Rubidium 86	10	Tungsten 187	100
Rubidium 87	10	Uranium (natural)[21/]	100
Ruthenium 97	100	Uranium 233	0.01
Ruthenium 103	10	Uranium 234-	
Ruthenium 105	10	Uranium 235	0 .01
Ruthenium 106	1	Vanadium 48	10
Samarium 151	10	Xenon 131m	1,000
Samarium 153	100	Xenon 133	100
Scandium 46	10	Xenon 135	100
Scandium 47	100	Ytterbium 175	100
Scandium 48	10	Yttrium 87	10
Selenium 75	10	Yttrium 88	10
Silicon 31	100	Yttrium 90	10
Silver 105	10	Yttrium 91	10
Silver 110m	1	Yttrium 92	100
Silver 111	100	Yttrium 93	100
Sodium 22	1	Zinc 65	10
Sodium 24	10	Zinc 69m	100
Strontium 85	10	Zinc 69	1,000
Strontium 89	1	Zirconium 93	10
Strontium 90	0.1	Zirconium 95	10
Strontium 91	10	Zirconium 97	10
Strontium 92	10		
Sulfur 35	100	Any alpha emitting radionuclide not listed above or mixtures of alpha emitters of unknown composition	0.01
Tantalum 182	10		
Technetium 96	100		
Technetium 97m	100		
Technetium 97	100		
Technetium 99m	100		

RH-2300. **Appendix B**. (Continued)

Material	Microcuries

Any radionuclide other than alpha emitting radionuclide, not listed above or mixtures of beta emitters of unknown composition	0.1

Note: For purposes of RH-1303 and RH-1403, where there is involved a combination of isotopes in known amounts, the limit for the combination should be derived as follows: Determine, for each isotope in the combination, the ratio between the quantity present in the combination and the limit otherwise established for the specific isotope when not in combination. The sum of such ratios for all the isotopes in the combination may not exceed "1" (i.e., "unity"). Example: For purposes of RH-1403, if a particular batch contains 20,000 µCi of Au^{198} and 50,000 µCi of C^{14}, it may also include not more than 300 µCi of I^{131}. This limit was determined as follows:

$$\frac{20{,}000\ \mu Ci\ Au^{198}}{100{,}000\ \mu Ci} + \frac{50{,}000\ \mu Ci\ C^{14}}{100{,}000\ \mu Ci} + \frac{300\ \mu Ci\ I^{131}}{1{,}000\ \mu Ci} = 1$$

The denominator in each of the above ratios was obtained by multiplying the figure in the Table by 1,000 as provided in RH-1403.

RH-2301.-
RH-2699. Reserved.

RH-2700. Appendix C: Determination of A_1 and A_2 Quantities

a. Single radionuclides.

1. For a single radionuclide of known identity, the values of A_1 and A_2 are taken from Table C-1 if listed there. The values A_1 and A_2 in Table C-1 are also applicable for radionuclides contained in (a,n) or (y,n) neutron sources.

2. For any single radionuclide whose identity is known but which is not listed in Table C-1, the values of A_1 and A_2 are determined according to the following procedures:

A. If the radionuclide emits only one type of radiation, A_1 is determined according to the rules in RH-2700.a.2. i through iv of this Paragraph. For radionuclides emitting different kinds of radiation, A_1 is the most restrictive value of those determined for each kind of radiation. However, in both cases, A_1 is restricted to a maximum of 1000 Ci. If a parent nuclide decays into a shorter lived daughter with a half-life not greater than ten (10) days, A_1 is calculated for both the parent and the daughter and the more limiting of the two values is assigned to the parent nuclide.

i. For gamma emitters, A_2 is determined by the expression:

$$A_1 = \frac{9 \text{ curies}}{r}$$

where r is the gamma-ray constant, corresponding to the dose in R/h at 1 meter per Ci; the number 9 results from the choice of 1 rem/h at a distance of 3 meter as the reference dose-equivalent rate.

ii. For x-ray emitters, A_1 is determined by the atomic number of the nuclide:

for $Z \leq 55$-A_1 = 1000 Ci

for $Z > 55$-A_1 = 200 Ci

where Z is the atomic number of the nuclide.

iii. For beta emitters, A_1 is determined by the maximum beta energy (E_{max}) according to Table A-2;

RH-2700. **Appendix C: Determination of A_1 and A_2 Quantities**

iv. For alpha emitters, A_1 is determined by the expression:

$$A_1 = 1000\ A_3$$

where A_3 is the value listed in Table A-3.

B. A_2 is the more restrictive of the following two values:

i. The corresponding A_1; and

ii. The value A_3 obtained from Table C-3.

3. For any single radionuclide whose identity is unknown the value of A_1 is taken to be 2 Ci and the value of A_2 is taken to be 0.002 Ci. However, if the atomic number of the radionuclide is known to be less than 82, the value of A_1 is taken to be 10 Ci and the value of A_2 is taken to be 0.4 Ci.

b. Mixtures of radionuclides, including radioactive decay chains.

1. For mixed fission products the following activity limits may be assumed if a detailed analysis of the mixture is not carried out:

$$A_1 = 10 \text{ Ci}$$
$$A_2 = 0.4 \text{ Ci}$$

2. A single radioactive decay chain is considered to be a single radionuclide when the radionuclides are present in their naturally occurring proportions and no daughter nuclide has a half-life either longer than ten (10) days or longer than that of the parent nuclide. The activity to be taken into account and the A_1 or A_2 value from Table C-1 to be applied are those corresponding to the parent nuclide of that chain. When calculating A_1 or A_2 values, radiation emitted by daughters must be considered. However, in the case of radioactive decay chains in which any daughter nuclide has a half-life either longer than ten (10) days or greater than that of the parent nuclide, the parent and daughter nuclides are considered to be mixtures of different nuclides.

RH-2700. **Appendix C: Determination of A_1 and A_2 Quantities** (Continued)

3. In the case of a mixture of different radionuclides, where the identity and activity of each radionuclide are known,

the permissible activity of each radionuclide R_1, R_2....R_n is such that $F_1 + F_2 + ... F_n$ is not greater than unity, where

$$F_1 = \frac{\text{Total activity of } R_1}{A_1\ (R_1)}$$

$$F_2 = \frac{\text{Total activity of } R_2}{A_1\ (R_2)}$$

$$F_n = \frac{\text{Total activity of } R_n}{A_1\ (R_n)}$$

A_1 (R_1, R_2, ... R_n) is the value of A_1 or A_2 as appropriate for the nuclide R_1, R_2, ... R_n.

4. When the identity of each radionuclide is known but the individual activities of some of the radionuclides are not known, the formula given in Paragraph 3 is applied to establish the values of A_1 or A_2 as appropriate. All the radionuclides whose individual activities are not known (their total activity will, however, be known) are classed in a single group and the most restrictive value of A_1 and A_3 applicable to any one of them is used as the value of A_1 or A_2 in the denominator of the fraction.

5. Where the identity of each radionuclide is known but individual activity of none of the radionuclides is known, the most restrictive value of A_1 or A_2 applicable to any one of the radionuclides present is adopted as the applicable value.

6. When the identity of none of the nuclides is known, the value of A_1 is taken to be 2 Ci and the value of A_2 is taken to be 0.002 Ci. However, if alpha emitters are known to be absent, the value of A_2 is taken to be 0.4 Ci.

RH-2700. **Appendix C: Determination of A_1 and A_2 Quantities** (Continued)

TABLE C-1 A_1 AND A_2 VALUES FOR RADIONUCLIDES
(See footnotes at end of Table)

Symbol of radionuclide	Element and Atomic Number	A_1(Ci)	A_2(Ci)	Specific activity (Ci/g)
Ac-227	Actinium (89)	1000	0.003	7.2 x 10
Ac-228		10	4	2.2×10^6
Ag-105	Silver (47)	40	40	3.1×10^4
Ag-110m		7	7	4.7×10^3
Ag-111		100	20	1.6×10^5
Am-241	Americium (95)	8	0.008	3.2
Am-243		8	0.008	1.9×10^{-1}
Ar-37 (compressed or uncompressed)*	Argon (18)	1000	1000	1.0×10^5
Ar-41 (uncompressed)*		20	20	4.3×10^7
Ar-41 (compressed)*		1	1	4.3×10^7
As-73	Arsenic (33)	1000	400	2.4×10^4
As-74		20	20	1.0×10^5
As-76		10	10	1.6×10^6
As-77		300	20	1.1×10^6
At-211	Astatine (85)	200	7	2.1×10^6
Au-193	Gold (79)	200	200	9.3×10^5
Au-196		30	30	1.2×10^5
Au-198		40	20	2.5×10^5
Au-199		200	25	2.1×10^5
Ba-131	Barium (56)	40	40	8.7×10^4
Ba-133		40	10	4.0×10^2
Ba-140		20	20	7.3×10^4
Be-7	Beryllium (4)	300	300	3.5×10^5
Bi-206	Bismuth (83)	5	5	9.9×10^4
Bi-207		10	25	2.2×10^2
Bi-210 (RaE)		100	4	1.2×10^5
Bi-212		6	6	1.5×10^7
Bk-249	Berkelium (97)	1000	1	1.8×10^3
Br-77	Bromine (35)	70	25	7.1×10^5
Br-82		6	6	1.1×10^6
C-11	Carbon (6)	20	20	8.4×10^8
C-14		1000	60	4.6
Ca-45	Calcium (20)	1000	25	1.9×10^4
Ca-47		20	20	5.9×10^5
Cd-109	Cadmium (48)	1000	70	2.6×10^3
Cd-115m		30	30	2.6×10^4
Cd-115		80	20	5.1×10^5
Ce-139	Cerium (58)	100	100	6.5×10^3
Ce-141		300	25	2.8×10^4
Ce-143		60	20	6.6×10^5
Ce-144		10	7	3.2×10^3
Cf-249	Californium (98)	2	0.002	3.1
Cf-250		7	0.007	1.3×10^2

TABLE C-1 A_1 AND A_2 VALUES FOR RADIONUCLIDES
(See footnotes at end of Table)

Symbol of radionuclide	Element and Atomic Number	A_1(Ci)	A_2(Ci)	Specific activity (Ci/g)
Cf-252		2	0.009	6.5×10^{2}
Cl-36	Chlorine (17)	300	10	3.2×10^{-2}
Cl-38		10	10	1.3×10^{8}
Cm-242	Curium (96)	200	0.2	3.3×10^{3}
Cm-243		9	0.009	4.2 x 10
Cm-244		10	0.01	8.2 x 10
Cm-245		6	0.006	1.0×10^{-1}
Cm-246		6	0.006	3.6×10^{-1}
Co-56	Cobalt (27)	5	5	3.0×10^{4}
Co-57		90	90	8.5×10^{3}
Co-58m		1000	1000	5.9×10^{6}
Co-58		20	20	3.1×10^{4}
Co-60		7	7	1.1×10^{3}
Cr-51	Chromium (24)	600	600	9.2×10^{4}
Cs-129	Cesium (55)	40	40	7.6×10^{5}
Ca-131		1000	1000	1.0×10^{5}
Ca-134m		1000	10	7.4×10^{6}
Cs-134		10	10	1.2×10^{3}
Cs-135		1000	25	8.8×10^{-4}
Cs-136		7	7	7.4×10^{4}
Ca-137		30	10	9.8 x 10
Cu-64	Copper (29)	80	25	3.8×10^{6}
Cu-67		200	25	7.9×10^{5}
Dy-165	Dysprosium (66)	100	20	8.2×10^{6}
Dy-166		1000	200	2.3×10^{5}
Er-169	Erbium (68)	1000	25	8.2×10^{4}
Er-171		50	20	2.4×10^{6}
Eu-152m	Europium (63)	30	30	2.2×10^{6}
Eu-152		20	10	1.9×10^{2}
Eu-154		10	5	1.5×10^{2}
Eu-155		400	60	1.4×10^{3}
F-18	Fluorine (9)	20	20	9.3×10^{7}
Fe-52	Iron (26)	5	5	7.3×10^{6}
Fe-55		1000	1000	2.2×10^{3}
Fe-59		10	10	4.9×10^{4}
Ga-67	Gallium (31)	100	100	6.0×10^{5}
Ga-68		20	20	4.0×10^{7}
Ga-72		7	7	3.1×10^{6}
Gd-153	Gadolinium (64)	200	100	3.6×10^{3}
Gd-159		300	20	1.1×10^{6}
Ge-68	Germanium (32)	20	10	7.0×10^{3}
Ge-71		1000	1000	1.6×10^{5}

m = metastable state

RH-2700. **Appendix C: Determination of A_1 and A_2 Quantities**

TABLE C-1 A_1 AND A_2 VALUES FOR RADIONUCLIDES (Cont'd)
(See footnotes at end of Table)

Symbol of radionuclide	Element and Atomic Number	A_1(Ci)	A_2(Ci)	Specific activity (Ci/g)
H-3	Hydrogen (1) see T-Tritium			
Hf-181	Hafnium (72)	30	25	1.6×10^4
Hg-197m	Mercury (80)	200	200	6.6×10^5
Hg-197		200	200	2.5×10^5
Hg-203		80	25	1.4×10^4
Ho-166	Holmium (67)	30	30	6.9×10^5
I-123	Iodine (53)	50	50	1.9×10^6
I-125		1000	70	1.7×10^4
I-126		40	10	7.8×10^4
I-129		1000	2	1.6×10^{-4}
I-131		40	10	1.2×10^5
I-132		7	7	1.1×10^7
I-133		30	10	1.1×10^6
I-134		8	8	2.7×10^7
I-135		10	10	3.5×10^6
In-111	Indium (49)	30	25	4.2×10^5
In-113m		60	60	1.6×10^7
In-114m		30	20	2.3×10^4
In-115m		100	20	6.1×10^6
Ir-190	Iridium (77)	10	10	6.2×10^4
Ir-192		20	10	9.1×10^3
Ir-194		10	10	8.5×10^5
K-42	Potassium (19)	10	10	6.0×10^6
K-43		20	10	3.3×10^6
Kr-85m (uncompressed)*	Krypton (36)	100	100	8.4×10^6
Kr-85m (compressed)*		3	3	8.4×10^6
Kr-85 (uncompressed)*		1000	1000	4.0×10^2
Kr-85 (compressed)*		5	5	4.0×10^2
Kr-87 (uncompressed)*		20	20	2.8×10^7
Kr-87 (compressed)*		0.6	0.6	2.8×10^7
La-140	Lanthanum (57)	30	30	5.6×10^5
LSA: Low specific activity material - see Footnote				
Lu-177	Lutetium (71)	300	25	1.1×10^5
MFP: Mixed fission products		10	0.4	
Mg-28	Magnesium (12)	6	6	5.2×10^6
Mn-52	Manganese (25)	5	5	4.4×10^5
Mn-54		20	20	8.3×10^3
Mn-56		5	5	2.2×10^7
Mo-99	Molybdenum (42)	100	20	4.7×10^5

m = metastable state

TABLE C-1 A_1 AND A_2 VALUES FOR RADIONUCLIDES
(See footnotes at end of Table)

Symbol of radionuclide	Element and Atomic Number	A_1(Ci)	A_2(Ci)	Specific activity (Ci/g)
N-13	Nitrogen (7)	20	10	1.5×10^9
Na-22	Sodium (11)	8	8	6.3×10^3
Na-24		5	5	8.7×10^6
Nb-93m	Niobium (41)	1000	200	1.1×10^3
Nb-95		20	20	3.9×10^4
Nb-97		20	20	2.6×10^7
Nd-147	Neodymium (60)	100	20	8.0×10^4
Nd-149		30	20	1.1×10^7
Ni-59	Nickel (28)	1000	900	8.1×10^{-2}
Ni-63		1000	100	4.6×10
Ni-65		10	10	1.9×10^7
Np-237	Neptunium (93)	5	0.005	6.9×10^{-4}
Np-239		200	25	2.3×10^5
Os-185	Osmium (76)	20	20	7.3×10^3
Os-191		600	200	4.6×10^4
Os-191m		200	200	1.2×10^6
Os-193		100	20	5.3×10^5
P-32	Phosphorus (15)	30	30	2.9×10^5
Pa-230	Protactinium (91)	20	0.8	3.2×10^4
Pa-231		2	0.002	4.5×10^{-2}
Pa-233		100	100	2.1×10^4
Pb-201	Lead (82)	20	20	1.7×10^6
Pb-210		100	0.2	8.8×10
Pb-212		6	5	1.4×10^4
Pd-103	Palladium (46)	1000	700	7.5×10^4
Pd-109		100	20	2.1×10^4
Pm-147	Promethium (61)	1000	25	9.4×10^2
Pm-149		100	20	4.2×10^5
Po-210	Polonium (84)	200	0.2	4.5×10^3
Pr-142	Praseodymium (59)	10	10	1.2×10^4
Pr-143		300	20	6.6×10^4
Pt-191	Platinum (78)	100	100	2.3×10^5
Pt-193m		200	200	2.0×10^5
Pt-197m		300	20	1.2×10^7
Pt-197		300	20	8.8×10^5
Pu-238	Plutonium (94)	3	0.003	1.7×10
Pu-239		2	0.002	6.2×10^{-2}
Pu-240		2	0.002	2.3×10^{-1}
Pu-241		1000	0.1	1.1×10^2
Pu-242		3	0.003	3.9×10^{-3}
Ra-223	Radium (88)	50	0.2	5.0×10^4
Ra-224		6	0.5	1.6×10^6
Ra-226		10	0.05	1.0
Ra-228		10	0.05	2.3×10^2

m = metastable state

TABLE C-1 A_1 AND A_2 VALUES FOR RADIONUCLIDES
(See footnotes at end of Table)

Symbol of radionuclide	Element and Atomic Number	A_1(Ci)	A_2(Ci)	Specific activity (Ci/g)
Rb-81	Rubidium (37)	30	25	8.2×10^4
Rb-86		30	30	8.1×10^4
Rb-87		"-"	"-"	6.6×10^{-8}
Rb (natural)		"-"	"-"	1.8×10^{-8}
Re-186	Rhenium (75)	100	20	1.9×10^5
Re-187		"-"	"-"	3.8×10^{-8}
Re-188		10	10	1.0×10^4
Re (natural)		"-"	"-"	2.4×10^{-8}
Rh-103m	Rhodium (45)	1000	1000	3.2×10^7
Rh-105		200	25	8.2×10^5
Rn-222	Radon (86)	10	2	1.5×10^5
Ru-97	Ruthenium (44)	80	80	5.5×10^5
Ru-103		30	25	3.2×10^4
Ru-105		20	20	6.6×10^4
Ru-106		10	7	3.4×10^3
S-35	Sulfur (16)	1000	60	4.3×10^4
Sb-122	Antimony (51)	30	30	3.9×10^5
Sb-124		5	5	1.8×10^4
Sb-125		40	25	1.4×10^3
Sc-46	Scandium (21)	8	8	3.4×10^4
Sc-47		200	20	8.2×10^5
Sc-48		5	5	1.5×10^6
Se-75	Selenium (34)	40	40	1.4×10^4
Si-31	Silicon (14)	100	20	3.9×10^7
Sm-147	Samarium (62)	"-"	"-"	2.0×10^{-8}
Sm-151		1000	90	2.6×10
Sm-153		300	20	4.4×10^5
Sn-113	Tin (50)	60	60	1.0×10^4
Sn-119m		100	100	4.4×10^3
Sn-125		10	10	1.1×10^5
Sr-85m	Strontium (38)	80	80	3.2×10^7
Sr-85		30	30	2.4×10^4
Sr-87m		50	50	1.2×10^7
Sr-89		100	10	2.9×10^4
Sr-90		10	0.4	1.5×10^2
Sr-91		10	10	3.6×10^6
Sr-92		10	10	1.3×10^7
T (uncompressed)*	Tritium (1)	1000	1000	9.7×10^3
T (compressed)*		1000	1000	9.7×10^3
T (activated luminous paint)		1000	1000	9.7×10^3
T (absorbed on solid carrier)		1000	1000	9.7×10^3
T (tritiated water)		1000	1000	9.7×10^3

m = metastable state "-" = Unlimited

RH-2700. **Appendix C: Determination of A_1 and A_2 Quantities** (Cont'd)

TABLE C-1 A_1 AND A_2 VALUES FOR RADIONUCLIDES
(See footnotes at end of Table)

Symbol of radionuclide	Element and Atomic Number	A_1(Ci)	A_2(Ci)	Specific activity (Ci/g)
T (other forms)		20	20	9.7×10^3
Ta-182	Tantalum (73)	20	20	6.2×10^3
Tb-160	Terbium (65)	20	10	1.1×10^4
Tc-96m	Technetium (43)	1000	1000	3.8×10^7
Tc-96		6	6	3.2×10^5
Tc-97m		1000	200	1.5×10^4
Tc-97		1000	400	1.4×10^{-3}
Tc-99m		100	100	5.2×10^6
Tc-99		1000	25	1.7×10^{-2}
Te-125m	Tellurium (52)	1000	100	1.8×10^4
Te-127m		300	20	4.0×10
Te-127		300	20	2.6×10^6
Te-129m		30	10	2.5×10^4
Te-129		100	20	2.0×10^7
Te-131m		10	10	8.0×10^5
Te-132		7	7	3.1×10^5
Th-227	Thorium (90)	200	0.2	3.2×10^4
Th-228		6	0.008	8.3×10^2
Th-230		3	0.003	1.9×10^{-2}
Th-231		1000	25	5.3×10^5
Th-232		"-"	"-"	1.1×10^{-7}
Th-234		10	10	2.3×10^4
Th (natural)		"-"	"-"	2.2×10^{-7}
Th (irradiated)**				
Tl-200	Thallium (81)	20	20	5.8×10^5
Tl-201		200	200	2.2×10^5
Tl-202		40	40	5.4×10^4
Tl-204		300	10	4.3×10^2
Tm-170	Thulium (69)	300	10	6.0×10^3
Tm-171		1000	100	1.1×10^3
U-230	Uranium (92)	100	0.1	2.7×10^4
U-232		30	0.03	2.1×10
U-233		100	0.1	9.5×10^{-3}
U-234		100	0.1	6.2×10^{-3}
U-235		100	0.2	2.1×10^{-6}
U-236		200	0.2	6.2×10^{-5}
U-238		"-"	"-"	3.3×10^{-7}
U (natural)		"-"	"-"	(SEE TABLE C-4)

m = metastable state "-" = Unlimited

TABLE C-1 A_1 AND A_2 VALUES FOR RADIONUCLIDES
(See footnotes at end of Table)

Symbol of radionuclide	Element and Atomic Number	A_1(Ci)	A_2(Ci)	Specific activity (Ci/g)
U (enriched)				
20%		"-"	"-"	(SEE TABLE C-4)
20% or greater		100	0.1	(SEE TABLE C-4)
U (depleted)		"-"	"-"	(SEE TABLE C-4)
U (irradiated)***				
V-48	Vanadium (23)	6	6	1.7×10^5
W-181	Tungsten (74)	200	100	5.0×10^3
W-185		1000	25	9.7×10^{-3}
W-187		40	20	7.0×10^5
Xe-127 (uncompressed)*	Xenon (54)	70	70	2.8×10^4
Xe-127 (compressed)*		5	5	2.8×10^4
Xe-131m (compressed)*		10	10	1.0×10^5
Xe-131m (uncompressed)*		100	100	1.0×10^5
Xe-133 (uncompressed)*		1000	1000	1.9×10^5
Xe-133 (compressed)*		5	5	1.9×10^5
Xe-135 (uncompressed)*		70	70	2.5×10^5
Xe-135 (compressed)*		2	2	2.5×10^5
Y-87	Yttrium (39)	20	20	4.5×10
Y-90		10	10	2.5×10^5
Y-91m		30	30	4.1×10^7
Y-91		30	30	2.5×10^4
Y-92		10	10	9.5×10^6
Y-93		10	10	3.2×10^6
Yb-169	Ytterbium (70)	80	80	2.3×10^5
Yb-175		400	25	1.8×10^5
Zn-65	Zinc (30)	30	30	8.0×10^3
Zn-69m		40	20	3.3×10^6
Zn-69		300	20	5.3×10^7
Zr-93	Zirconium (40)	1000	200	3.5×10^{-3}
Zr-95		20	20	2.1×10^4
Zr-97		20	20	2.0×10^6

m = metastable state "-" = Unlimited

RH-2700. **Appendix C: Determination of A_1 and A_2 Quantities** (Cont'd)

TABLE C-1 A_1 AND A_2 VALUES FOR RADIONUCLIDES

FOOTNOTES

* For the purpose of Table C-1, compressed gas means a gas at a pressure which exceeds the ambient atmospheric pressure at the location where the containment system was closed.

** The values of A_1 and A_2 must be calculated in accordance with the procedure specified in Appendix C, Paragraph b, taking into account the activity of the fission products and of the Uranium-233 in addition to that of the Thorium.

*** The values of A_1 and A_2 must be calculated with the procedure specified in Appendix C, Paragraph b, taking into account the activity of the fission products and Plutonium isotopes in addition to that of the Uranium.

Low specific activity material means any of the following:

1. Uranium or Thorium ores and physical or chemical concentrates of those ores;

2. Unirradiated natural or depleted Uranium or unirradiated natural Thorium;

3. Tritium oxide in aqueous solutions provided the concentration does not exceed 5.0 millicuries per milliliter;

4. Material in which the radioactivity is essentially uniformly distributed and in which the estimated average concentration per gram of contents does not exceed;

   i. 0.0001 millicurie of radionuclides for which the A_2 quantity in Appendix C is not more than 0.05 curie;

   ii. 0.005 millicurie of radionuclides for which the A_2 quantity in Appendix C is more than 0.05 curie, but not more than 1 curie; or

   iii. 0.3 millicurie of radionuclides for which the A_2 quantity in Appendix C is more than 1 curie.

5. Objects of non-radioactive material externally contaminated with radioactive material, provided that the radioactive material is not readily dispersible and the surface contamination, when averaged over an area of 1 square meter, does not exceed 0.0001 millicuries (220,000 disintegrations per minute) per square centimeter of radionuclides for which the A_2 quantity in Appendix C is not more than 0.05 curie, or 0.001 millicurie (2,200,000 disintegrations per minute) per square centimeter for other radionuclides.

RH-2700 (Cont'd)

TABLE C-2

RELATIONSHIP BETWEEN A_1 AND E_{max} FOR BETA EMITTERS

E_{max}(MeV)	A_1(Ci)
< 0.5	1000
0.5 - < 1.0	300
1.0 - < 1.5	100
1.5 - < 2.0	30
≥ 2.0	10

TABLE C-3

RELATIONSHIP BETWEEN A_3 AND THE ATOMIC NUMBER

OF THE RADIONUCLIDE

A_3			
Atomic Number	Half-life less than 1000 days	Half-life 1000 days to 10^6 years	Half-life greater than 10^6 years
1 to 81	3 Ci	.05 Ci	3 Ci
82 and above	.002 Ci	.002 Ci	3 Ci

RH-2700. (Cont'd)

TABLE C-4.

ACTIVITY-MASS RELATIONSHIPS

FOR URANIUM/THORIUM

Thorium and Uranium enrichment* wt % U-234 present	Specific activity	
	Ci/g	g/Ci
0.45	5.0×10^{-7}	2.0×10^{6}
0.72 (natural)	7.06×10^{-7}	1.42×10^{6}
1.0	7.6×10^{-7}	1.3×10^{6}
1.5	1.0×10^{-6}	1.0×10^{6}
5.0	2.7×10^{-6}	3.7×10^{5}
10.0	4.8×10^{-6}	2.1×10^{5}
20.0	1.0×10^{-5}	1.0×10^{5}
35.0	2.0×10^{-5}	5.0×10^{4}
50.0	2.5×10^{-5}	4.0×10^{4}
90.0	5.8×10^{-5}	1.7×10^{4}
93.0	7.0×10^{-5}	1.4×10^{4}
95.0	9.1×10^{-5}	1.1×10^{4}
Natural Thorium	2.2×10^{-7}	4.6×10^{6}

* The figures for Uranium include representative values for the activity of the Uranium-234 which is concentrated during the enrichment process. The activity for Thorium includes the equilibrium concentration of Thorium-228.

RH-2701.-
RH-2788. Reserved.

RH-2789. Appendix D. Reserved.

APPENDIX E TO RH-1000 THROUGH RH-2110 – PROTECTION FACTORS FOR RESPIRATORS[a]

DESCRIPTION[b]	Modes[c]	PROTECTION FACTORS[d] Particulates Only	PROTECTION FACTORS[d] Particulates, gases, and vapors[e]	TESTED & CERTIFIED EQUIPMEN National Institute for Occupational Safety and Health/Mine Safety and Health Administration tests for permissibility
I. AIR-PURIFYING RESPIRATORS[f]				
Facepiece, half-mask[g]	NP	10	-----	30 CFR Part 11, Subpart K
Facepiece, full	NP	50	-----	
Facepiece, half-mask full, or hood	PP	1000	-----	
II. ATMOSPHERE-SUPPLYING RESPIRATORS				
1. Air-line respirator				
Facepiece, half-mask	CF	-----	1000	
Facepiece, half-mask	D	-----	5	
Facepiece, full	CF	-----	2000	
Facepiece, full	D	-----	5	30 CFR Part 11, Subpart J.
Facepiece, full	PD	-----	2000	
Hood	CF	-----	(h)	
Suit	CF	-----	(i)	(j)
2. Self-contained breathing apparatus (SCBA)				
Facepiece, full	D	-----	50	30 CFR Part 11, Subpart H.
Facepiece, full	PD	-----	10,000[k]	
Facepiece, full	RD	-----	50	
Facepiece, full	RP	-----	5,000[l]	
III. COMBINATION RESPIRATORS				
Any combination of air-purifying and atmosphere-supplying respirators		Protection factor for type and mode of operation as listed above.		30 CFR Part 11, 11.63(b).

FOOTNOTES TO APPENDIX E

a. For use in the selection of respiratory protective devices to be used only where the contaminants have been identified and the concentrations (or possible concentrations) are known.

b. Only for shaven faces and where nothing interferes with the seal of tight-fitting facepieces against the skin. (Hoods and suits are excepted.)

c. The mode symbols are defined as follows:

CF = continuous flow
D = demand
NP = negative pressure (i.e., negative phase during inhalation)
PD = pressure demand (i.e., always positive pressure)
PP = positive pressure
RD = demand, re-circulating (closed circuit)
RP = pressure demand, re-circulating (closed circuit)

d. 1. The protection factor is a measure of the degree of protection afforded by a respirator, defined as the ratio of the concentration of airborne radioactive material outside the respiratory protective equipment to that inside the equipment (usually inside the facepiece) under conditions of use. It is applied to the ambient airborne concentration to estimate the concentrations inhaled by the wearer according to the following formula:

$$\text{Concentration inhaled} = \frac{\text{Ambient airborne concentration}}{\text{Protection factor}}$$

2. The protection factors apply:

A. Only for individuals trained in using respirators and wearing properly fitted respirators that are used and maintained under supervision in a well-planned respiratory protective program.

B. For air-purifying respirators only when high efficiency particulate filters (above 99.97% removal efficiency by thermally generated 0.3 mm dioctyl phthalate [DOP] test or equivalent) are used in atmospheres not deficient in oxygen and not containing radioactive gas or vapor respiratory hazards.

C. No adjustment is to be made for the use of sorbents against radioactive material in the form of gases or vapors.

FOOTNOTES TO APPENDIX E (Continued)

D. For atmosphere-supplying respirators only when supplied with adequate respirable air. Respirable air shall be provided of the quality and quantity required in accordance with NIOSH/MSHA certification. Oxygen and air shall not be used in the same apparatus.

e. Excluding radioactive contaminants that present an absorption or submersion hazard. For Tritium Oxide, approximately one-third of the intake occurs by absorption through the skin so that an overall protection factor of less than 2 is appropriate when atmosphere- supplying respirators are used to protect against Tritium Oxide. If the protection factor for a device is 5 the effective protection factor for Tritium is about 1.4; for devices with protection factors of 10 the effective factor for Tritium Oxide is about 1.7, and for devices with protection factors of 100 or more the effective factor for Tritium Oxide is about 1.9. Air-purifying respirators are not suitable for protection against Tritium Oxide. See also footnote i concerning supplied-air suits.

f. Canisters and cartridges shall not be used beyond service-life limitations.

g. Under-chin type only. This type of respirator is not satisfactory for use where it might be possible (e.g., if an accident or emergency were to occur) for the ambient airborne concentrations to reach instantaneous values greater than ten (10) times the pertinent values in Table 1, Column 3 of Appendix G to RH-1000 through RH-2110 of this part. This type of respirator is not suitable for protection against Plutonium or other high-toxicity materials. The mask is to be tested for fit prior to use, each time it is donned.

h. 1. Equipment shall be operated in a manner that ensures that proper airflow rates are maintained. A protection factor of no more than 1000 may be utilized for tested-and-certified air hoods when a minimum airflow of 6 cfm (0.17 m^3 per minute) is maintained and calibrated airline pressure gauges or flow measuring devices are used. A protection factor of up to 2000 may be used for tested and certified hoods only when the air flow is maintained at the manufacturer's recommended maximum rate for the equipment, this rate is greater than 6 cfm (0.17 m^3 per minute), and calibrated air-line pressure gauges or flow measuring devices are used.

2. The design of the supplied-air hood or helmet with a minimum flow of 6 cfm (0.17 m^3 per minute) of air may determine its overall efficiency and the protection it provides. For example, some hoods aspirate contaminated air into the breathing zone when the wearer works with hands-over-head. This aspiration may be overcome if a short cape-like extension to the hood is

FOOTNOTES TO APPENDIX E (Continued**)**

worn under a coat or over-alls. Other limitations specified by the approval agency shall be considered before using a hood in certain types of atmospheres (See footnote i).

i. Appropriate protection factors shall be determined, taking into account the design of the suit and its permeability to the contaminant under conditions of use. There shall be a standby rescue person equipped with a respirator or other apparatus appropriate for the potential hazards and communications equipment whenever supplied-air suits are used.

j. No approval schedules are currently available for this equipment. Equipment is to be evaluated by testing or on the basis of reliable test information.

k. This type of respirator may provide greater protection and be used as an emergency device in unknown concentrations for protection against inhalation hazards. External radiation hazards and other limitations to permitted exposure, such as skin absorption, must be taken into account in such circumstances.

l. Quantitative fit testing shall be performed on each individual and no more than 0.02% leakage is allowed with this type of apparatus. Perceptible outward leakage of gas from this or any positive pressure self-contained breathing apparatus is unacceptable because service life will be reduced substantially. Special training in the use of this type of apparatus shall be provided to the wearer.

Note 1: **Protection factors for respirators as may be approved by the U.S. Bureau of Mines/National Institute for Occupational Safety and Health (NIOSH), according to applicable approvals for respirators for type and mode of use to protect against airborne radionuclides, may be used to the extent that they do not exceed the protection factors listed in this table. The protection factors listed in this table may not be appropriate to circumstances where chemical or other respiratory hazards exist in addition to radioactive hazards. The selection and use of respirators for such circumstances should take into account applicable approvals of the U.S. Bureau of Mines/NIOSH.**

Note 2: **Radioactive contaminants for which the concentration values in Table 1, Column 3 of Appendix G to RH-1000 through RH-2110 of this part are based on internal dose due to inhalation may, in addition, present external exposure hazards at higher concentrations. Under these circumstances, limitations on occupancy may have to be governed by external dose limits.**

APPENDIX F: LIST OF ELEMENTS

Atomic Name	Symbol	Atomic Number	Name	Symbol	Number
Actinium	Ac	89	Mercury	Hg	80
Aluminum	Al	13	Molybdenum	Mo	42
Americium	Am	95	Neodymium	Nd	60
Antimony	Sb	51	Neptunium	Np	93
Argon	Ar	18	Nickel	Ni	28
Arsenic	As	33	Niobium	Nb	41
Astatine	At	85	Osmium	Os	76
Barium	Ba	56	Palladium	Pd	46
Berkelium	Bk	97	Phosphorus	P	15
Beryllium	Be	4	Platinum	Pt	78
Bismuth	Bi	83	Plutonium	Pu	94
Bromine	Br	35	Polonium	Po	84
Cadmium	Cd	48	Potassium	K	19
Calcium	Ca	20	Praseodymium	Pr	59
Californium	Cf	98	Promethium	Pm	61
Carbon	C	6	Protactinium	Pa	91
Cerium	Ce	58	Radium	Ra	88
Cesium	Cs	55	Radon	Rn	86
Chlorine	Cl	17	Rhenium	Re	75
Chromium	Cr	24	Rhodium	Rh	45
Cobalt	Co	27	Rubidium	Rb	37
Copper	Cu	29	Ruthenium	Ru	44
Curium	Cm	96	Samarium	Sm	62
Dysprosium	Dy	66	Scandium	Sc	21
Einsteinium	Es	99	Selenium	Se	34
Erbium	Er	68	Silicon	Si	14
Europium	Eu	63	Silver	Ag	47
Fermium	Fm	100	Sodium	Na	11
Fluorine	F	9	Strontium	Sr	38
Francium	Fr	87	Sulfur	S	16
Gadolinium	Gd	64	Tantalum	Ta	73
Gallium	Ga	31	Technetium	Tc	43
Germanium	Ge	32	Tellurium	Te	52
Gold	Au	79	Terbium	Tb	65
Hafnium	Hf	72	Thallium	Tl	81
Holmium	Ho	67	Thorium	Th	90
Hydrogen	H	1	Thulium	Tm	69
Indium	In	49	Tin	Sn	50
Iodine	I	53	Titanium	Ti	22
Iridium	Ir	77	Tungsten	W	74
Iron	Fe	26	Uranium	U	92
Krypton	Kr	36	Vanadium	V	23
Lanthanum	La	57	Xenon	Xe	54
Lead	Pb	82	Ytterbium	Yb	70
Lutetium	Lu	71	Yttrium	Y	39
Magnesium	Mg	12	Zinc	Zn	30
Manganese	Mn	25	Zirconium	Zr	40
Mendelevium	Md	101			

APPENDIX G TO RH-1000 THROUGH RH-2110

ANNUAL LIMITS ON INTAKE (ALIs) AND DERIVED AIR CONCENTRATIONS (DACs) OF RADIONUCLIDES FOR OCCUPATIONAL EXPOSURE; EFFLUENT CONCENTRATIONS; CONCENTRATIONS FOR RELEASE TO SEWERAGE

Introduction

For each radionuclide Table 1 indicates the chemical form which is to be used for selecting the appropriate ALI or DAC value. The ALIs and DACs for inhalation are given for an aerosol with an activity median aerodynamic diameter (AMAD) of one (1) mm and for three classes (D,W,Y) of radioactive material, which refer to their retention (approximately days, weeks or years) in the pulmonary region of the lung. This classification applies to a range of clearance half-times of less than 10 days, for W from 10 to 100 days, and for Y greater than 100 days. Table 2 provides concentration limits for airborne and liquid effluents released to the general environment. Table 3 provides concentration limits for discharges to sanitary sewer systems.

Notation

The values in Tables 1, 2, and 3 are presented in the computer "E" notation. In this notation, a value of 6E-02 represents a value of 6×10^{-2} or 0.06, 6E+2 represents 6×10^{2} or 600, and 6E+0 represents 6×10^{0} or 6.

Table 1 "Occupational"

Note that the columns in Table 1 of this Appendix captioned "Oral Ingestion ALI," "Inhalation ALI," and "DAC," are applicable to occupational exposure to radioactive material.

The ALIs in this Appendix are the annual intakes of given radionuclide by "Reference Man" which would result in either:

1. A committed effective dose equivalent of 5 Rems (stochastic ALI) or

2. A committed dose equivalent of 50 Rems to an organ or tissue (non-stochastic ALI). The stochastic ALIs were derived to result in a risk, due to irradiation of organs and tissues, comparable to the risk associated with deep dose equivalent to the whole body of 5 Rems. The derivation includes multiplying the committed dose equivalent to an organ or tissue by a weighting factor, $\mathbf{W}_T$.

APPENDIX G TO RH-1000 THROUGH RH-2110 (Continued)
ANNUAL LIMITS ON INTAKE (ALIs) AND DERIVED AIR CONCENTRATIONS (DACs) OF RADIONUCLIDES FOR OCCUPATIONAL EXPOSURE; EFFLUENT CONCENTRATIONS; CONCENTRATIONS FOR RELEASE TO SEWERAGE

This weighting factor is the proportion of the risk of stochastic effects resulting from irradiation of the organ or tissue, T, to the total risk of stochastic effects when the whole body is irradiated uniformly. The values of $\mathbf{W}_T$ are listed under the definition of weighting factor in RH-1000.c.j. The non-stochastic ALIs were derived to avoid non-stochastic effects, such as prompt damage to tissue or reduction in organ function.

A value of $\mathbf{W}_T$ = 0.06 is applicable to each of the five organs or tissues in the "remainder" category receiving the highest dose equivalents, and the dose equivalents of all other remaining tissues may be disregarded. The following parts of the GI tract: stomach, small intestine, upper large intestine, and lower large intestine - - are to be treated as four separate organs.

Note that the dose equivalents for extremities (hands and forearms, feet and lower legs), skin, and lens of the eye are not considered in computing the committed effective dose equivalent, but are subject to limits that must be met separately.

When an ALI is defined by the stochastic dose limit, this value alone, is given. When an ALI is determined by the non-stochastic dose limit to an organ, the organ or tissue to which the limit applies is shown, and the ALI for the stochastic limit is shown in parentheses. Abbreviated organ or tissue designations are used:

LLI wall	=	lower large intestine wall
St wall	=	stomach wall
Blad wall	=	bladder wall
Bone surf	=	bone surface

The use of the ALIs listed first, the more limiting of the stochastic and non-stochastic ALIs, will ensure that non-stochastic effects are avoided and that the risk of stochastic effects is limited to an acceptably low value. If, in a particular situation involving a radionuclide for which the non-stochastic ALI is limiting, use of that non-stochastic ALI is considered unduly conservative, the licensee may use the stochastic ALI to determine the committed effective dose equivalent. However, the licensee shall also ensure that the 50 Rem dose equivalent limit for any organ or tissue is not exceeded by the sum of the external deep dose equivalent plus the internal committed dose to that organ (not the effective dose). For the case where there is no external dose contribution, this would be demonstrated if the sum of the fractions of the non-stochastic ALIs (ALI_{ns}) that contribute to the committed dose equivalent to the organ receiving the highest dose does not exceed unity (i.e., Σ [intake (in μCi) of each radionuclide/ALI_{ns}] < 1.0). If there is an external deep dose equivalent contribution of H_d then this sum must be less than one (1) - (H_d/50) instead of being < 1.0.

APPENDIX G TO RH-1000 THROUGH RH-2110 (Continued)
ANNUAL LIMITS ON INTAKE (ALIs) AND DERIVED AIR CONCENTRATIONS (DACs) OF RADIONUCLIDES FOR OCCUPATIONAL EXPOSURE; EFFLUENT CONCENTRATIONS; CONCENTRATIONS FOR RELEASE TO SEWERAGE

Note that the dose equivalents for extremities (hand and forearms, feet and lower legs), skin, and lens of the eye are not considered in computing the committed effective dose equivalent, but are subject to limits that must be met separately.

The derived air concentration (DAC) values are derived limits intended to control chronic occupational exposures. The relationship between the DAC and the ALI is given by:

DAC = ALI(in μCi)/(2000 hours per working year x 60 minutes/hour x

2×10^4 ml per minute) = [ALI/2.4×10^9] μCi/ml,

where 2×10^4 ml per minute is the volume of air breathed per minute at work by "Reference Man" under working conditions of "light work".

The DAC values relate to one of two modes of exposure: either external submersion or the internal committed dose equivalents resulting from inhalation of radioactive materials. Derived air concentrations based upon submersion are for immersion in a semi-infinite cloud of uniform concentration and apply to each radionuclide separately.

The ALI and DAC values relate to exposure to the single radionuclide named, but also include contributions from the in-growth of any daughter radionuclide produced in the body by the decay of the parent. However, intakes that include both the parent and daughter radionuclides should be treated by the general method appropriate for mixtures.

The value of ALI and DAC do not apply directly when the individual both ingests and inhales a radionuclide, when the individual is exposed to a mixture of radionuclides by either inhalation or ingestion or both, or when the individual is exposed to both internal and external irradiation (See RH-1201). When an individual is exposed to radioactive materials which fall under several of the translocation classifications (i.e., Class D, Class W, or Class Y) of the same radionuclide, the exposure may be evaluated as if it were a mixture of different radionuclides.

It should be noted that the classification of a compound as Class D, W, or Y is based on the chemical form of the compound and does not take into account the radiological half-life of different radioisotopes. For this reason, values are given for Class D, W, and Y compounds, even for very short-lived radionuclides.

APPENDIX G TO RH-1000 THROUGH RH-2110 (Continued)
ANNUAL LIMITS ON INTAKE (ALIs) AND DERIVED AIR CONCENTRATIONS (DACs) OF RADIONUCLIDES FOR OCCUPATIONAL EXPOSURE; EFFLUENT CONCENTRATIONS; CONCENTRATIONS FOR RELEASE TO SEWERAGE

Table 2 "Effluent Concentrations"

The columns in Table 2 of this Appendix captioned "Effluents," "Air," and "Water," are applicable to the assessment and control of dose to the public, particularly in the implementation of the provisions of RH-1208. The concentration values given in Columns 1 and 2 of Table 2 are equivalent to the radionuclide concentrations which, if inhaled or ingested continuously over the course of a year, would produce a total effective dose equivalent of 0.05 Rem (50 millirem or 0.5 millisieverts).

Consideration of non-stochastic limits has not been included in deriving the air and water effluent concentration limits because non-stochastic effects are presumed not to occur at the dose levels established for individual members of the public. For radionuclides, where the non-stochastic limit was governing in deriving the occupational DAC, the stochastic ALI was used in deriving the corresponding airborne effluent limit in Table 2. For this reason, the DAC and airborne effluent limits are not always proportional as was the case in Appendix G to RH-102 through RH-1308.

The air concentration values listed in Table 2, Column 1, were derived by one of two methods. For those radionuclides for which the stochastic limit is governing, the occupational stochastic inhalation ALI was divided by 2.4×10^9, relating the inhalation ALI to the DAC, as explained above, and then divided by a factor of 300. The factor of 300 includes the following components: a factor of 50 to relate the five (5) Rem annual occupational dose limit to the 0.1 Rem limit for members of the public, a factor of 3 to adjust for the difference in exposure time and the inhalation rate for a worker and that for members of the public; and a factor of two (2) to adjust the occupational values (derived for adults) so that they are applicable to other age groups.

For those radionuclides for which submersion (external dose) is limiting, the occupational DAC in Table 1, Column 3, was divided by 219. The factor of 219 is composed of a factor of 50, as described above, and a factor of 4.38 relating occupational exposure for 2,000 hours per year to full-time exposure (8,760 hours per year). Note that an additional factor of two (2) for age considerations is not warranted in the submersion case.

The water concentrations were derived by taking the most restrictive occupational stochastic oral ingestion ALI and dividing by 7.3×10^7. The factor of 7.3×10^7 (ml) includes the following components: the factors of 50 and two (2) described above and a factor of 7.3×10^5 (ml) which is the annual water intake of "Reference Man."

APPENDIX G TO RH-1000 THROUGH RH-2110 (Continued)
ANNUAL LIMITS ON INTAKE (ALIs) AND DERIVED AIR CONCENTRATIONS (DACs) OF RADIONUCLIDES FOR OCCUPATIONAL EXPOSURE; EFFLUENT CONCENTRATIONS; CONCENTRATIONS FOR RELEASE TO SEWERAGE

Note 2 of this Appendix provides groupings of radionuclides which are applicable to unknown mixtures of radionuclides. These groupings (including occupational inhalation ALIs and DACs, air and water effluent concentrations and sewerage) require demonstrating that the most limiting radionuclides in successive classes are absent. The limit for the unknown mixture is defined when the presence of the one of the listed radionuclides cannot be definitely excluded as being present either from knowledge of the radionuclide composition of the source or from actual measurements.

Table 3 "Sewer Disposal"

The monthly average concentrations for release to sanitary sewers are applicable to the provisions in RH-1402. The concentration values were derived by taking the most restrictive occupational stochastic oral ingestion ALI and dividing by 7.3×10^6 (ml). The factor of 7.3×10^6 (ml) is composed of a factor of 7.3×10^5 (ml), the annual water intake by "Reference Man," and a factor of ten (10), such that the concentrations, if the sewage released by the licensee were the only source of water ingested by a reference man during a year, would result in a committed effective dose equivalent of 0.5 Rem.

APPENDIX G TO RH-1000 THROUGH RH-2110
ANNUAL LIMITS ON INTAKE (ALIs) AND DERIVED AIR CONCENTRATIONS (DACs) OF RADIONUCLIDES FOR OCCUPATIONAL EXPOSURE; EFFLUENT CONCENTRATIONS; CONCENTRATIONS FOR RELEASE TO SEWERAGE

RH-2792. APPENDIX G:

ALIs and DACs of Radionuclides for Occupational Exposure, Effluent Concentrations; Concentrations for Release to Sewerage

Atomic No.	Radionuclide	Class	Table 1 Occupational Values: Col. 1 Oral Ingestion ALI (µCi)	Col. 2 Inhalation ALI (µCi)	Col. 3 Inhalation DAC (µCi/ml)	Table 2 Effluent Concentrations: Col. 1 Air (µCi/ml)	Col. 2 Water (µCi/ml)	Table 3 Releases to Sewers: Monthly Average Concentrat (µCi/ml)
1	Hydrogen-3	Water, DAC includes skin absorption	8E+4	8E+4	2E-5	1E-7	1E-3	1E-2
		Gas (HT or T_2) Submersion[1]: Use above values as HT and T_2 oxidize in air and in the body to HTO.						
4	Beryllium-7	W, all compounds except those given for Y	4E+4	2E+4	9E-6	3E-8	6E-4	6E-3
		Y, oxides, halides, and nitrates	-	2E+4	8E-6	3E-8	-	-
4	Beryllium-10	W, see ^{7}Be	1E+3	2E+2	6E-8	2E-10	-	-
			LLI wall (1E+3)	-	-	-	2E-5	2E-4
		Y, see ^{7}Be	-	1E+1	6E-9	2E-11	-	-
6	Carbon-11[2]	Monoxide	-	1E+6	5E-4	2E-6	-	-
		Dioxide	-	6E+5	3E-4	9E-7	-	-
		Compounds	4E+5	4E+5	2E-4	6E-7	6E-3	6E-2
6	Carbon-14	Monoxide	-	2E+6	7E-4	2E-6	-	-
		Dioxide	-	2E+5	9E-5	3E-7	-	-
		Compounds	2E+3	2E+3	1E-6	3E-9	3E-5	3E-4
9	Fluorine-18[2]	D, fluorides of H, Li, Na, K, Rb, Cs, and Fr	5E+4	7E+4	3E-5	1E-7	-	-
			St wall (5E+4)	-	-	-	7E-4	7E-3
		W, fluorides of Be, Mg, Ca, Sr, Ba, Ra, Al, Ga, In, Tl, As, Sb, Bi, Fe, Ru, Os, Co, Ni, Pd, Pt, Cu, Ag, Au, Zn, Cd, Hg, Sc, Y, Ti, Zr, V, Nb, Ta, Mn, Tc, and Re	-	9E+4	4E-5	1E-7	-	-
		Y, lanthanum fluoride	-	8E+4	3E-5	1E-7	-	-
11	Sodium-22	D, all compounds	4E+2	6E+2	3E-7	9E-10	6E-6	6E-5
11	Sodium-24	D, all compounds	4E+3	5E+3	2E-6	7E-9	5E-5	5E-4
12	Magnesium-28	D, all compounds except those given for W	7E+2	2E+3	7E-7	2E-9	9E-6	9E-5
		W, oxides, hydroxides, carbides, halides, and nitrates	-	1E+3	5E-7	2E-9	-	-
13	Aluminum-26	D, all compounds except those given for W	4E+2	6E+1	3E-8	9E-11	6E-6	6E-5
		W, oxides, hydroxides, carbides, halides, and nitrates	-	9E+1	4E-8	1E-10	-	-
14	Silicon-31	D, all compounds except those given for W and Y	9E+3	3E+4	1E-5	4E-8	1E-4	1E-3
		W, oxides, hydroxides, carbides, and nitrates	-	3E+4	1E-5	5E-8	-	-
		Y, aluminosilicate glass	-	3E+4	1E-5	4E-8	-	-
14	Silicon-32	D, see ^{31}Si	2E+3	2E+2	1E-7	3E-10	-	-
			LLI wall (3E+3)	-	-	-	4E-5	4E-4
		W, see ^{31}Si	-	1E+2	5E-8	2E-10	-	-
		Y, see ^{31}Si	-	5E+0	2E-9	7E-12	-	-

APPENDIX G TO RH-1000 THROUGH RH-2110
ANNUAL LIMITS ON INTAKE (ALIs) AND DERIVED AIR CONCENTRATIONS (DACs) OF RADIONUCLIDES FOR OCCUPATIONAL EXPOSURE; EFFLUENT CONCENTRATIONS; CONCENTRATIONS FOR RELEASE TO SEWERAGE

			Table 1 Occupational Values[2]			Table 2 Effluent Concentrations		Table 3 Releases to Sewers
			Col. 1	Col. 2	Col. 3	Col. 1	Col. 2	
			Oral Ingestion	Inhalation				
Atomic No.	Radionuclide	Class	ALI (µCi)	ALI (µCi)	DAC (µCi/ml)	Air (µCi/ml)	Water (µCi/ml)	Monthly Average Concentration (µCi/ml)
15	Phosphorus-32	D, all compounds except phosphates given for W	6E+2	9E+2	4E-7	1E-9	9E-6	9E-5
		W, phosphates of Zn^{2+}, S^{3+}, Mg^{2+}, Fe^{3+}, Bi^{3+}, and lanthanides	-	4E+2	2E-7	5E-10	-	-
15	Phosphorus-33	D, see ^{32}P	6E+3	8E+3	4E-6	1E-8	8E-5	8E-4
		W, see ^{32}P	-	3E+3	1E-6	4E-9	-	-
16	Sulfur-35	Vapor	1E+4	6E-6	2E-8	-	-	
		D, sulfides and sulfates except those given for W	1E+4	2E+4	7E-6	2E-8	-	-
			LLI wall (8E+3)	-	-	-	1E-4	1E-3
		W, elemental sulfur, sulfides of Sr, Ba, Ge, Sn, Pb, As, Sb, Bi, Cu, Ag, Au, Zn, Cd, Hg, W, and Mo. Sulfates of Ca, Sr, Ba, Ra, As, Sb, and Bi	6E+3 -	2E+3	9E-7	3E-9	-	-
17	Chlorine-36	D, chlorides of H, Li, Na, K, Rb, Cs, and Fr	2E+3	2E+3	1E-6	3E-9	2E-5	2E-4
		W, chlorides of lanthanides, Be, Mg, Ca, Sr, Ba, Ra, Al, Ga, In, Tl, Ge, Sn, Pb, As, Sb, Bi, Fe, Ru, Os, Co, Rh, Ir, Ni, Pd, Pt, Cu, Ag, Au, Zn, Cd, Hg, Sc, Y, Ti, Zr, Hf, V, Nb, Ta, Cr, Mo, W, Mn, Tc, and Re	-	2E+2	1E-7	3E-10	-	-
17	Chlorine-38[2]	D, see ^{36}Cl	2E+4	4E+4	2E-5	6E-8	-	-
			St wall (3E+4)	-	-	-	3E-4	3E-3
		W, see ^{36}Cl	-	5E+4	2E-5	6E-8	-	-
17	Chlorine-39[2]	D, see ^{36}Cl	2E+4	5E+4	2E-5	7E-8	-	-
			St wall (4E+4)	-	-	-	5E-4	5E-3
		W, see ^{36}Cl	-	6E+4	2E-5	8E-8	-	-
18	Argon-37	Submersion[1]	-	-	1E+0	6E-3	-	-
18	Argon-39	Submersion[1]	-	-	2E-4	8E-7	-	-
18	Argon-41	Submersion[1]	-	-	3E-6	1E-8	-	-
19	Potassium-40	D, all compounds	3E+2	4E+2	2E-7	6E-10	4E-6	4E-5
19	Potassium-42	D, all compounds	5E+3	5E+3	2E-6	7E-9	6E-5	6E-4
19	Potassium-43	D, all compounds	6E+3	9E+3	4E-6	1E-8	9E-5	9E-4
19	Potassium-44[2]	D, all compounds	2E+4	7E+4	3E-5	9E-8	-	-
			St wall (4E+4)	-	-	-	5E-4	5E-3
19	Potassium-45[2]	D, all compounds	3E+4	1E+5	5E-5	2E-7	-	-
			St wall (5E+4)	-	-	-	7E-4	7E-3
20	Calcium-41	W, all compounds	3E+3	4E+3	2E-6	-	-	-
			Bone surf (4E+3)	Bone surf (4E+3)	-	5E-9	6E-5	6E-4

APPENDIX G TO RH-1000 THROUGH RH-2110
ANNUAL LIMITS ON INTAKE (ALIs) AND DERIVED AIR CONCENTRATIONS (DACs) OF RADIONUCLIDES FOR OCCUPATIONAL EXPOSURE; EFFLUENT CONCENTRATIONS; CONCENTRATIONS FOR RELEASE TO SEWERAGE

			Table 1 Occupational Values			Table 2 Effluent Concentrations		Table 3 Releases to Sewers
			Col. 1 Oral Ingestion	Col. 2 Inhalation	Col. 3 Inhalation	Col. 1	Col. 2	
Atomic No.	Radionuclide	Class	ALI (μCi)	ALI (μCi)	DAC (μCi/ml)	Air (μCi/ml)	Water (μCi/ml)	Monthly Average Concentration (μCi/ml)
20	Calcium-45	W, all compounds	2E+3	8E+2	4E-7	1E-9	2E-5	2E-4
20	Calcium-47	W, all compounds	8E+2	9E+2	4E-7	1E-9	1E-5	1E-4
21	Scandium-43	Y, all compounds	7E+3	2E+4	9E-6	3E-8	1E-4	1E-3
21	Scandium-44m	Y, all compounds	5E+2	7E+2	3E-7	1E-9	7E-6	7E-5
21	Scandium-44	Y, all compounds	4E+3	1E+4	5E-6	2E-8	5E-5	5E-4
21	Scandium-46	Y, all compounds	9E+2	2E+2	1E-7	3E-10	1E-5	1E-4
21	Scandium-47	Y, all compounds	2E+3	3E+3	1E-6	4E-9	-	-
			LLI wall (3E+3)	-	-	-	4E-5	4E-4
21	Scandium-48	Y, all compounds	8E+2	1E+3	6E-7	2E-9	1E-5	1E-4
21	Scandium-49[2]	Y, all compounds	2E+4	5E+4	2E-5	8E-8	3E-4	3E-3
22	Titanium-44	D, all compounds except those given for W and Y	3E+2	1E+1	5E-9	2E-11	4E-6	4E-5
		W, oxides, hydroxides, carbides, halides, and nitrates	-	3E+1	1E-8	4E-11	-	-
		Y, SrTiO	-	6E+0	2E-9	8E-12	-	-
22	Titanium-45	D, see ^{44}Ti	9E+3	3E+4	1E-5	3E-8	1E-4	1E-3
		W, see ^{44}Ti	-	4E+4	1E-5	5E-8	-	-
		Y, see ^{44}Ti	-	3E+4	1E-5	4E-8	-	-
23	Vanadium-47[2]	D, all compounds except those given for W	3E+4	8E+4	3E-5	1E-7	-	-
			St wall (3E+4)	-	-	-	4E-4	4E-3
		W, oxides, hydroxides, carbides, and halides	-	1E+5	4E-5	1E-7	-	-
23	Vanadium-48	D, see ^{47}V	6E+2	1E+3	5E-7	2E-9	9E-6	9E-5
		W, see ^{47}V	-	6E+2	3E-7	9E-10	-	-
23	Vanadium-49	D, see ^{47}V	7E+4	3E+4	1E-5	-	-	-
			LLI wall (9E+4)	Bone surf (3E+4)	-	5E-8	1E-3	1E-2
		W, see ^{47}V	-	2E+4	8E-6	2E-8	-	-
24	Chromium-48	D, all compounds except those given for W and Y	6E+3	1E+4	5E-6	2E-8	8E-5	8E-4
		W, halides and nitrates	-	7E+3	3E-6	1E-8	-	-
		Y, oxides and hydroxides	-	7E+3	3E-6	1E-8	-	-
24	Chromium-49[2]	D, see ^{48}Cr	3E+4	8E+4	4E-5	1E-7	4E-4	4E-3
		W, see ^{48}Cr	-	1E+5	4E-5	1E-7	-	-
		Y, see ^{48}Cr	-	9E+4	4E-5	1E-7	-	-
24	Chromium-51	D, see ^{48}Cr	4E+4	5E+4	2E-5	6E-8	5E-4	5E-3
		W, see ^{48}Cr	-	2E+4	1E-5	3E-8	-	-
		Y, see ^{48}Cr	-	2E+4	8E-6	3E-8	-	-
25	Manganese-51[2]	D, all compounds except those given for W	2E+4	5E+4	2E-5	7E-8	3E-4	3E-3
		W, oxides, hydroxides, halides, and nitrates	-	6E+4	3E-5	8E-8	-	-

APPENDIX G TO RH-1000 THROUGH RH-2110
ANNUAL LIMITS ON INTAKE (ALIs) AND DERIVED AIR CONCENTRATIONS (DACs) OF RADIONUCLIDES FOR OCCUPATIONAL EXPOSURE; EFFLUENT CONCENTRATIONS; CONCENTRATIONS FOR RELEASE TO SEWERAGE

			Table 1 Occupational Values			Table 2 Effluent Concentrations		Table 3 Releases to Sewers
			Col. 1	Col. 2	Col. 3	Col. 1	Col. 2	
			Oral Ingestion	Inhalation				
Atomic No.	Radionuclide	Class	ALI (μCi)	ALI (μCi)	DAC (μCi/ml)	Air (μCi/ml)	Water (μCi/ml)	Monthly Average Concentration (μCi/ml)
25	Manganese-52m[2]	D, see ^{51}Mn	3E+4	9E+4	4E-5	1E-7	-	-
			St wall (4E+4)	-	-	-	5E-4	5E-3
		W, see ^{51}Mn	-	1E+5	4E-5	1E-7	-	-
25	Manganese-52	D, see ^{51}Mn	7E+2	1E+3	5E-7	2E-9	1E-5	1E-4
		W, see ^{51}Mn	-	9E+2	4E-7	1E-9	-	-
25	Manganese-53	D, see ^{51}Mn	5E+4	1E+4	5E-6	-	7E-4	7E-3
			-	Bone surf (2E+4)	-	3E-8	-	-
		W, see ^{51}Mn	-	1E+4	5E-6	2E-8	-	-
25	Manganese-54	D, see ^{51}Mn	2E+3	9E+2	4E-7	1E-9	3E-5	3E-4
		W, see ^{51}Mn	-	8E+2	3E-7	1E-9	-	-
25	Manganese-56	D, see ^{51}Mn	5E+3	2E+4	6E-6	2E-8	7E-5	7E-4
		W, see ^{51}Mn	-	2E+4	9E-6	3E-8	-	-
26	Iron-52	D, all compounds except those given for W	9E+2	3E+3	1E-6	4E-9	1E-5	1E-4
		W, oxides, hydroxides, and halides	-	2E+3	1E-6	3E-9	-	-
26	Iron-55	D, see ^{52}Fe	9E+3	2E+3	8E-7	3E-9	1E-4	1E-3
		W, see ^{52}Fe	-	4E+3	2E-6	6E-9	-	-
26	Iron-59	D, see ^{52}Fe	8E+2	3E+2	1E-7	5E-10	1E-5	1E-4
		W, see ^{52}Fe	-	5E+2	2E-7	7E-10	-	-
26	Iron-60	D, see ^{52}Fe	3E+1	6E+0	3E-9	9E-12	4E-7	4E-6
		W, see ^{52}Fe	-	2E+1	8E-9	3E-11	-	-
27	Cobalt-55	W, all compounds except those given for Y	1E+3	3E+3	1E-6	4E-9	2E-5	2E-4
		Y, oxides, hydroxides, halides, and nitrates	-	3E+3	1E-6	4E-9	-	-
27	Cobalt-56	W, see ^{55}Co	5E+2	3E+2	1E-7	4E-10	6E-6	6E-5
		Y, see ^{55}Co	4E+2	2E+2	8E-8	3E-10	-	-
27	Cobalt-57	W, see ^{55}Co	8E+3	3E+3	1E-6	4E-9	6E-5	6E-4
		Y, see ^{55}Co	4E+3	7E+2	3E-7	9E-10	-	-
27	Cobalt-58m	W, see ^{55}Co	6E+4	9E+4	4E-5	1E-7	8E-4	8E-3
		Y, see ^{55}Co	-	6E+4	3E-5	9E-8	-	-
27	Cobalt-58	W, see ^{55}Co	2E+3	1E+3	5E-7	2E-9	2E-5	2E-4
		Y, see ^{55}Co	1E+3	7E+2	3E-7	1E-9	-	-
27	Cobalt-60m[2]	W, see ^{55}Co	1E+6	4E+6	2E-3	6E-6	-	-
			St wall (1E+6)	-	-	-	2E-2	2E-1
		Y, see ^{55}Co	-	3E+6	1E-3	4E-6	-	-
27	Cobalt-60	W, see ^{55}Co	5E+2	2E+2	7E-8	2E-10	3E-6	3E-5
		Y, see ^{55}Co	2E+2	3E+1	1E-8	5E-11	-	-
27	Cobalt-61[2]	W, see ^{55}Co	2E+4	6E+4	3E-5	9E-8	3E-4	3E-3
		Y, see ^{55}Co	2E+4	6E+4	2E-5	8E-8	-	-
27	Cobalt-62m[2]	W, see ^{55}Co	4E+4	2E+5	7E-5	2E-7	-	-
			St wall (5E+4)	-	-	-	7E-4	7E-3
		Y, see ^{55}Co	-	2E+5	6E-5	2E-7	-	-

APPENDIX G TO RH-1000 THROUGH RH-2110
ANNUAL LIMITS ON INTAKE (ALIs) AND DERIVED AIR CONCENTRATIONS (DACs) OF RADIONUCLIDES FOR OCCUPATIONAL EXPOSURE; EFFLUENT CONCENTRATIONS; CONCENTRATIONS FOR RELEASE TO SEWERAGE

			Table 1 Occupational Values			Table 2 Effluent Concentrations		Table 3 Releases to Sewers
			Col. 1	Col. 2	Col. 3	Col. 1	Col. 2	
			Oral Ingestion	Inhalation				
Atomic No.	Radionuclide	Class	ALI (μCi)	ALI (μCi)	DAC (μCi/ml)	Air (μCi/ml)	Water (μCi/ml)	Monthly Average Concentration (μCi/ml)
28	Nickel-56	D, all compounds except those given for W	1E+3	2E+3	8E-7	3E-9	2E-5	2E-4
		W, oxides, hydroxides, and carbides	-	1E+3	5E-7	2E-9	-	-
		Vapor	-	1E+3	5E-7	2E-9	-	-
28	Nickel-57	D, see ^{56}Ni	2E+3	5E+3	2E-6	7E-9	2E-5	2E-4
		W, see ^{56}Ni	-	3E+3	1E-6	4E-9	-	-
		Vapor	-	6E+3	3E-6	9E-9	-	-
28	Nickel-59	D, see ^{56}Ni	2E+4	4E+3	2E-6	5E-9	3E-4	3E-3
		W, see ^{56}Ni	-	7E+3	3E-6	1E-8	-	-
		Vapor	-	2E+3	8E-7	3E-9	-	-
28	Nickel-63	D, see ^{56}Ni	9E+3	2E+3	7E-7	2E-9	1E-4	1E-3
		W, see ^{56}Ni	-	3E+3	1E-6	4E-9	-	-
		Vapor	-	8E+2	3E-7	1E-9	-	-
28	Nickel-65	D, see ^{56}Ni	8E+3	2E+4	1E-5	3E-8	1E-4	1E-3
		W, see ^{56}Ni	-	3E+4	1E-5	4E-8	-	-
		Vapor	-	2E+4	7E-6	2E-8	-	-
28	Nickel-66	D, see ^{56}Ni	4E+2	2E+3	7E-7	2E-9	-	-
			LLI wall (5E+2)	-	-	-	6E-6	6E-5
		W, see ^{56}Ni	-	6E+2	3E-7	9E-10	-	-
		Vapor	-	3E+3	1E-6	4E-9	-	-
29	Copper-60[2]	D, all compounds except those given for W and Y	3E+4	9E+4	4E-5	1E-7	-	-
			St wall (3E+4)	-	-	-	4E-4	4E-3
		W, sulfides, halides, and nitrates	-	1E+5	5E-5	2E-7	-	-
		Y, oxides and hydroxides	-	1E+5	4E-5	1E-7	-	-
29	Copper-61	D, see ^{60}Cu	1E+4	3E+4	1E-5	4E-8	2E-4	2E-3
		W, see ^{60}Cu	-	4E+4	2E-5	6E-8	-	-
		Y, see ^{60}Cu	-	4E+4	1E-5	5E-8	-	-
29	Copper-64	D, see ^{60}Cu	1E+4	3E+4	1E-5	4E-8	2E-4	2E-3
		W, see ^{60}Cu	-	2E+4	1E-5	3E-8	-	-
		Y, see ^{60}Cu	-	2E+4	9E-6	3E-8	-	-
29	Copper-67	D, see ^{60}Cu	5E+3	8E+3	3E-6	1E-8	6E-5	6E-4
		W, see ^{60}Cu	-	5E+3	2E-6	7E-9	-	-
		Y, see ^{60}Cu	-	5E+3	2E-6	6E-9	-	-
30	Zinc-62	Y, all compounds	1E+3	3E+3	1E-6	4E-9	2E-5	2E-4
30	Zinc-63[2]	Y, all compounds	2E+4	7E+4	3E-5	9E-8	-	-
			St wall (3E+4)	-	-	-	3E-4	3E-3
30	Zinc-65	Y, all compounds	4E+2	3E+2	1E-7	4E-10	5E-6	5E-5
30	Zinc-69m	Y, all compounds	4E+3	7E+3	3E-6	1E-8	6E-5	6E-4
30	Zinc-69[2]	Y, all compounds	6E+4	1E+5	6E-5	2E-7	8E-4	8E-3
30	Zinc-71m	Y, all compounds	6E+3	2E+4	7E-6	2E-8	8E-5	8E-4
30	Zinc-72	Y, all compounds	1E+3	1E+3	5E-7	2E-9	1E-5	1E-4

APPENDIX G TO RH-1000 THROUGH RH-2110
ANNUAL LIMITS ON INTAKE (ALIs) AND DERIVED AIR CONCENTRATIONS (DACs) OF RADIONUCLIDES FOR OCCUPATIONAL EXPOSURE; EFFLUENT CONCENTRATIONS; CONCENTRATIONS FOR RELEASE TO SEWERAGE

			Table 1 Occupational Values			Table 2 Effluent Concentrations		Table 3 Releases to Sewers
			Col. 1	Col. 2	Col. 3	Col. 1	Col. 2	
			Oral Ingestion	Inhalation				
Atomic No.	Radionuclide	Class	ALI (µCi)	ALI (µCi)	DAC (µCi/ml)	Air (µCi/ml)	Water (µCi/ml)	Monthly Average Concentration (µCi/ml)
31	Gallium-65[2]	D, all compounds except those given for W	5E+4	2E+5	7E-5	2E-7	-	-
			St wall (6E+4)	-	-	-	9E-4	9E-3
		W, oxides, hydroxides, carbides, halides, and nitrates	-	2E+5	8E-5	3E-7	-	-
31	Gallium-66	D, see ^{65}Ga	1E+3	4E+3	1E-6	5E-9	1E-5	1E-4
		W, see ^{65}Ga	-	3E+3	1E-6	4E-9	-	-
31	Gallium-67	D, see ^{65}Ga	7E+3	1E+4	6E-6	2E-8	1E-4	1E-3
		W, see ^{65}Ga	-	1E+4	4E-6	1E-8	-	-
31	Gallium-68[2]	D, see ^{65}Ga	2E+4	4E+4	2E-5	6E-8	2E-4	2E-3
		W, see ^{65}Ga	-	5E+4	2E-5	7E-8	-	-
31	Gallium-70[2]	D, see ^{65}Ga	5E+4	2E+5	7E-5	2E-7	-	-
			St wall (7E+4)	-	-	-	1E-3	1E-2
		W, see ^{65}Ga	-	2E+5	8E-5	3E-7	-	-
31	Gallium-72	D, see ^{65}Ga	1E+3	4E+3	1E-6	5E-9	2E-5	2E-4
		W, see ^{65}Ga	-	3E+3	1E-6	4E-9	-	-
31	Gallium-73	D, see ^{65}Ga	5E+3	2E+4	6E-6	2E-8	7E-5	7E-4
		W, see ^{65}Ga	-	2E+4	6E-6	2E-8	-	-
32	Germanium-66	D, all compounds except those given for W	2E+4	3E+4	1E-5	4E-8	3E-4	3E-3
		W, oxides, sulfides, and halides	-	2E+4	8E-6	3E-8	-	-
32	Germanium-67[2]	D, see ^{66}Ge	3E+4	9E+4	4E-5	1E-7	-	-
			St wall (4E+4)	-	-	-	6E-4	6E-3
		W, see ^{66}Ge	-	1E+5	4E-5	1E-7	-	-
32	Germanium-68	D, see ^{66}Ge	5E+3	4E+3	2E-6	5E-9	6E-5	6E-4
		W, see ^{66}Ge	-	1E+2	4E-8	1E-10	-	-
32	Germanium-69	D, see ^{66}Ge	1E+4	2E+4	6E-6	2E-8	2E-4	2E-3
		W, see ^{66}Ge	-	8E+3	3E-6	1E-8	-	-
32	Germanium-71	D, see ^{66}Ge	5E+5	4E+5	2E-4	6E-7	7E-3	7E-2
		W, see ^{66}Ge	-	4E+4	2E-5	6E-8	-	-
32	Germanium-75[2]	D, see ^{66}Ge	4E+4	8E+4	3E-5	1E-7	-	-
			St wall (7E+4)	-	-	-	9E-4	9E-3
		W, see ^{66}Ge	-	8E+4	4E-5	1E-7	-	-
32	Germanium-77	D, see ^{66}Ge	9E+3	1E+4	4E-6	1E-8	1E-4	1E-3
		W, see ^{66}Ge	-	6E+3	2E-6	8E-9	-	-
32	Germanium-78[2]	D, see ^{66}Ge	2E+4	2E+4	9E-6	3E-8	-	-
			St wall (2E+4)	-	-	-	3E-4	3E-3
		W, see ^{66}Ge	-	2E+4	9E-6	3E-8	-	-
33	Arsenic-69[2]	W, all compounds	3E+4	1E+5	5E-5	2E-7	-	-
			St wall (4E+4)	-	-	-	6E-4	6E-3
33	Arsenic-70[2]	W, all compounds	1E+4	5E+4	2E-5	7E-8	2E-4	2E-3

APPENDIX G TO RH-1000 THROUGH RH-2110
ANNUAL LIMITS ON INTAKE (ALIs) AND DERIVED AIR CONCENTRATIONS (DACs) OF RADIONUCLIDES FOR OCCUPATIONAL EXPOSURE; EFFLUENT CONCENTRATIONS; CONCENTRATIONS FOR RELEASE TO SEWERAGE

			Table 1 Occupational Values			Table 2 Effluent Concentrations		Table 3 Releases to Sewers
			Col. 1	Col. 2	Col. 3	Col. 1	Col. 2	
			Oral Ingestion	Inhalation				
Atomic No.	Radionuclide	Class	ALI (μCi)	ALI (μCi)	DAC (μCi/ml)	Air (μCi/ml)	Water (μCi/ml)	Monthly Average Concentration (μCi/ml)
33	Arsenic-71	W, all compounds	4E+3	5E+3	2E-6	6E-9	5E-5	5E-4
33	Arsenic-72	W, all compounds	9E+2	1E+3	6E-7	2E-9	1E-5	1E-4
33	Arsenic-73	W, all compounds	8E+3	2E+3	7E-7	2E-9	1E-4	1E-3
33	Arsenic-74	W, all compounds	1E+3	8E+2	3E-7	1E-9	2E-5	2E-4
33	Arsenic-76	W, all compounds	1E+3	1E+3	6E-7	2E-9	1E-5	1E-4
33	Arsenic-77	W, all compounds	4E+3	5E+3	2E-6	7E-9	-	-
			LLI wall (5E+3)	-	-	-	6E-5	6E-4
33	Arsenic-78[2]	W, all compounds	8E+3	2E+4	9E-6	3E-8	1E-4	1E-3
34	Selenium-70[2]	D, all compounds except those given for W	2E+4	4E+4	2E-5	5E-8	1E-4	1E-3
		W, oxides, hydroxides, carbides, and elemental Se	1E+4	4E+4	2E-5	6E-8	-	-
34	Selenium-73m[2]	D, see ^{70}Se	6E+4	2E+5	6E-5	2E-7	4E-4	4E-3
		W, see ^{70}Se	3E+4	1E+5	6E-5	2E-7	-	-
34	Selenium-73	D, see ^{70}Se	3E+3	1E+4	5E-6	2E-8	4E-5	4E-4
		W, see ^{70}Se	-	2E+4	7E-6	2E-8	-	-
34	Selenium-75	D, see ^{70}Se	5E+2	7E+2	3E-7	1E-9	7E-6	7E-5
		W, see ^{70}Se	-	6E+2	3E-7	8E-10	-	-
34	Selenium-79	D, see ^{70}Se	6E+2	8E+2	3E-7	1E-9	8E-6	8E-5
		W, see ^{70}Se	-	6E+2	2E-7	8E-10	-	-
34	Selenium-81m[2]	D, see ^{70}Se	4E+4	7E+4	3E-5	9E-8	3E-4	3E-3
		W, see ^{70}Se	2E+4	7E+4	3E-5	1E-7	-	-
34	Selenium-81[2]	D, see ^{70}Se	6E+4	2E+5	9E-5	3E-7	-	-
			St wall (8E+4)	-	-	-	1E-3	1E-2
		W, see ^{70}Se	-	2E+5	1E-4	3E-7	-	-
34	Selenium-83[2]	D, see ^{70}Se	4E+4	1E+5	5E-5	2E-7	4E-4	4E-3
		W, see ^{70}Se	3E+4	1E+5	5E-5	2E-7	-	-
35	Bromine-74m[2]	D, bromides of H, Li, Na, K, Rb, Cs, and Fr	1E+4	4E+4	2E-5	5E-8	-	-
			St wall (2E+4)	-	-	-	3E-4	3E-3
		W, bromides of lanthanides, Be, Mg, Ca, Sr, Ba, Ra, Al, Ga, In, Tl, Ge, Sn, Pb, As, Sb, Bi, Fe, Ru, Os, Co, Rh, Ir, Ni, Pd, Pt, Cu, Ag, Au, Zn, Cd, Hg, Sc, Y, Ti, Zr, Hf, V, Nb, Ta, Mn, Tc, and Re	-	4E+4	2E-5	6E-8	-	-
35	Bromine-74[2]	D, see ^{74m}Br	2E+4	7E+4	3E-5	1E-7	-	-
			St wall (4E+4)	-	-	-	5E-4	5E-3
		W, see ^{74m}Br	-	8E+4	4E-5	1E-7	-	-

APPENDIX G TO RH-1000 THROUGH RH-2110
ANNUAL LIMITS ON INTAKE (ALIs) AND DERIVED AIR CONCENTRATIONS (DACs) OF RADIONUCLIDES FOR OCCUPATIONAL EXPOSURE; EFFLUENT CONCENTRATIONS; CONCENTRATIONS FOR RELEASE TO SEWERAGE

			8					
			Table 1 Occupational Values			Table 2 Effluent Concentrations		Table 3 Releases to Sewers
			Col. 1	Col. 2	Col. 3	Col. 1	Col. 2	
			Oral Ingestion	Inhalation				Monthly Average
Atomic No.	Radionuclide	Class	ALI (µCi)	ALI (µCi)	DAC (µCi/ml)	Air (µCi/ml)	Water (µCi/ml)	Concentration (µCi/ml)
35	Bromine-75[2]	D, see ^{74m}Br	3E+4	5E+4	2E-5	7E-8	-	-
			St wall (4E+4)	-	-	-	5E-4	5E-3
		W, see ^{74m}Br	-	5E+4	2E-5	7E-8	-	-
35	Bromine-76	D, see ^{74m}Br	4E+3	5E+3	2E-6	7E-9	5E-5	5E-4
		W, see ^{74m}Br	-	4E+3	2E-6	6E-9	-	-
35	Bromine-77	D, see ^{74m}Br	2E+4	2E+4	1E-5	3E-8	2E-4	2E-3
		W, see ^{74m}Br	-	2E+4	8E-6	3E-8	-	-
35	Bromine-80m	D, see ^{74m}Br	2E+4	2E+4	7E-6	2E-8	3E-4	3E-3
		W, see ^{74m}Br	-	1E+4	6E-6	2E-8	-	-
35	Bromine-80[2]	D, see ^{74m}Br	5E+4	2E+5	8E-5	3E-7	-	-
			St wall (9E+4)	-	-	-	1E-3	1E-2
		W, see ^{74m}Br	-	2E+5	9E-5	3E-7	-	-
35	Bromine-82	D, see ^{74m}Br	3E+3	4E+3	2E-6	6E-9	4E-5	4E-4
		W, see ^{74m}Br	-	4E+3	2E-6	5E-9	-	-
35	Bromine-83	D, see ^{74m}Br	5E+4	6E+4	3E-5	9E-8	-	-
			St wall (7E+4)	-	-	-	9E-4	9E-3
		W, see ^{74m}Br	-	6E+4	3E-5	9E-8	-	-
35	Bromine-84[2]	D, see ^{74m}Br	2E+4	6E+4	2E-5	8E-8	-	-
			St wall (3E+4)	-	-	-	4E-4	4E-3
		W, see ^{74m}Br	-	6E+4	3E-5	9E-8	-	-
36	Krypton-74[2]	Submersion[1]	-	-	3E-6	1E-8	-	-
36	Krypton-76	Submersion[1]	-	-	9E-6	4E-8	-	-
36	Krypton-77[2]	Submersion[1]	-	-	4E-6	2E-8	-	-
36	Krypton-79	Submersion[1]	-	-	2E-5	7E-8	-	-
36	Krypton-81	Submersion[1]	-	-	7E-4	3E-6	-	-
36	Krypton-83m[2]	Submersion[1]	-	-	1E-2	5E-5	-	-
36	Krypton-85m	Submersion[1]	-	-	2E-5	1E-7	-	-
36	Krypton-85	Submersion[1]	-	-	1E-4	7E-7	-	-
36	Krypton-87[2]	Submersion[1]	-	-	5E-6	2E-8	-	-
36	Krypton-88	Submersion[1]	-	-	2E-6	9E-9	-	-
37	Rubidium-79[2]	D, all compounds	4E+4	1E+5	5E-5	2E-7	-	-
			St wall (6E+4)	-	-	-	8E-4	8E-3
37	Rubidium-81m[2]	D, all compounds	2E+5	3E+5	1E-4	5E-7	-	-
			St wall (3E+5)	-	-	-	4E-3	4E-2
37	Rubidium-81	D, all compounds	4E+4	5E+4	2E-5	7E-8	5E-4	5E-3
37	Rubidium-82m	D, all compounds	1E+4	2E+4	7E-6	2E-8	2E-4	2E-3
37	Rubidium-83	D, all compounds	6E+2	1E+3	4E-7	1E-9	9E-6	9E-5

APPENDIX G TO RH-1000 THROUGH RH-2110
ANNUAL LIMITS ON INTAKE (ALIs) AND DERIVED AIR CONCENTRATIONS(DACs) OF RADIONUCLIDES FOR OCCUPATIONAL EXPOSURE; EFFLUENT CONCENTRATIONS; CONCENTRATIONS FOR RELEASE TO SEWERAGE

			Table 1 Occupational Values			Table 2 Effluent Concentrations		Table 3 Releases to Sewers
			Col. 1	Col. 2	Col. 3	Col. 1	Col. 2	
			Oral Ingestion	Inhalation				
Atomic No.	Radionuclide	Class	ALI (μCi)	ALI (μCi)	DAC (μCi/ml)	Air (μCi/ml)	Water (μCi/ml)	Monthly Average Concentration (μCi/ml)
37	Rubidium-84	D, all compounds	5E+2	8E+2	3E-7	1E-9	7E-6	7E-5
37	Rubidium-86	D, all compounds	5E+2	8E+2	3E-7	1E-9	7E-6	7E-5
37	Rubidium-87	D, all compounds	1E+3	2E+3	6E-7	2E-9	1E-5	1E-4
37	Rubidium-88[2]	D, all compounds	2E+4	6E+4	3E-5	9E-8	-	-
			St wall (3E+4)	-	-	-	4E-4	4E-3
37	Rubidium-89[2]	D, all compounds	4E+4	1E+5	6E-5	2E-7	-	-
			St wall (6E+4)	-	-	-	9E-4	9E-3
38	Strontium-80[2]	D, all soluble compounds except SrTiO	4E+3	1E+4	5E-6	2E-8	6E-5	6E-4
		Y, all insoluble compounds and SrTiO	-	1E+4	5E-6	2E-8	-	-
38	Strontium-81[2]	D, see ^{80}Sr	3E+4	8E+4	3E-5	1E-7	3E-4	3E-3
		Y, see ^{80}Sr	2E+4	8E+4	3E-5	1E-7	-	-
38	Strontium-82	D, see ^{80}Sr	3E+2	4E+2	2E-7	6E-10	-	-
			LLI wall (2E+2)	-	-	-	3E-6	3E-5
		Y, see ^{80}Sr	2E+2	9E+1	4E-8	1E-10	-	-
38	Strontium-83	D, see ^{80}Sr	3E+3	7E+3	3E-6	1E-8	3E-5	3E-4
		Y, see ^{80}Sr	2E+3	4E+3	1E-6	5E-9	-	-
38	Strontium-85m[2]	D, see ^{80}Sr	2E+5	6E+5	3E-4	9E-7	3E-3	3E-2
		Y, see ^{80}Sr	-	8E+5	4E-4	1E-6	-	-
38	Strontium-85	D, see ^{80}Sr	3E+3	3E+3	1E-6	4E-9	4E-5	4E-4
		Y, see ^{80}Sr	-	2E+3	6E-7	2E-9	-	-
38	Strontium-87m	D, see ^{80}Sr	5E+4	1E+5	5E-5	2E-7	6E-4	6E-3
		Y, see ^{80}Sr	4E+4	2E+5	6E-5	2E-7	-	-
38	Strontium-89	D, see ^{80}Sr	6E+2	8E+2	4E-7	1E-9	-	-
			LLI wall (6E+2)	-	-	-	8E-6	8E-5
		Y, see ^{80}Sr	5E+2	1E+2	6E-8	2E-10	-	-
38	Strontium-90	D, see ^{80}Sr	3E+1	2E+1	8E-9	-	-	-
			Bone surf (4E+1)	Bone surf (2E+1)	-	3E-11	5E-7	5E-6
		Y, see ^{80}Sr	-	4E+0	2E-9	6E-12	-	-
38	Strontium-91	D, see ^{80}Sr	2E+3	6E+3	2E-6	8E-9	2E-5	2E-4
		Y, see ^{80}Sr	-	4E+3	1E-6	5E-9	-	-
38	Strontium-92	D, see ^{80}Sr	3E+3	9E+3	4E-6	1E-8	4E-5	4E-4
		Y, see ^{80}Sr	-	7E+3	3E-6	9E-9	-	-
39	Yttrium-86m[2]	W, all compounds except those given for Y	2E+4	6E+4	2E-5	8E-8	3E-4	3E-3
		Y, oxides and hydroxides	-	5E+4	2E-5	8E-8	-	-
39	Yttrium-86	W, see ^{86m}Y	1E+3	3E+3	1E-6	5E-9	2E-5	2E-4
		Y, see ^{86m}Y	-	3E+3	1E-6	5E-9	-	-
39	Yttrium-87	W, see ^{86m}Y	2E+3	3E+3	1E-6	5E-9	3E-5	3E-4
		Y, see ^{86m}Y	-	3E+3	1E-6	5E-9	-	-

APPENDIX G TO RH-1000 THROUGH RH-2110
ANNUAL LIMITS ON INTAKE (ALIs) AND DERIVED AIR CONCENTRATIONS (DACs) OF RADIONUCLIDES FOR OCCUPATIONAL EXPOSURE; EFFLUENT CONCENTRATIONS; CONCENTRATIONS FOR RELEASE TO SEWERAGE

			Table 1 Occupational Values			Table 2 Effluent Concentrations		Table 3 Releases to Sewers
			Col. 1	Col. 2	Col. 3	Col. 1	Col. 2	
			Oral Ingestion	Inhalation				
Atomic No.	Radionuclide	Class	ALI (μCi)	ALI (μCi)	DAC (μCi/ml)	Air (μCi/ml)	Water (μCi/ml)	Monthly Average Concentration (μCi/ml)
39	Yttrium-88	W, see ^{86m}Y	1E+3	3E+2	1E-7	3E-10	1E-5	1E-4
		Y, see ^{86m}Y	-	2E+2	1E-7	3E-10	-	-
39	Yttrium-90m	W, see ^{86m}Y	8E+3	1E+4	5E-6	2E-8	1E-4	1E-3
		Y, see ^{86m}Y	-	1E+4	5E-6	2E-8	-	-
39	Yttrium-90	W, see ^{86m}Y	4E+2	7E+2	3E-7	9E-10	-	-
			LLI wall (5E+2)	-	-	-	7E-6	7E-5
		Y, see ^{86m}Y	-	6E+2	3E-7	9E-10	-	-
39	Yttrium-91m[2]	W, see ^{86m}Y	1E+5	2E+5	1E-4	3E-7	2E-3	2E-2
		Y, see ^{86m}Y	-	2E+5	7E-5	2E-7	-	-
39	Yttrium-91	W, see ^{86m}Y	5E+2	2E+2	7E-8	2E-10	-	-
			LLI wall (6E+2)	-	-	-	8E-6	8E-5
		Y, see ^{86m}Y	-	1E+2	5E-8	2E-10	-	-
39	Yttrium-92	W, see ^{86m}Y	3E+3	9E+3	4E-6	1E-8	4E-5	4E-4
		Y, see ^{86m}Y	-	8E+3	3E-6	1E-8	-	-
39	Yttrium-93	W, see ^{86m}Y	1E+3	3E+3	1E-6	4E-9	2E-5	2E-4
		Y, see ^{86m}Y	-	2E+3	1E-6	3E-9	-	-
39	Yttrium-94[2]	W, see ^{86m}Y	2E+4	8E+4	3E-5	1E-7	-	-
			St wall (3E+4)	-	-	-	4E-4	4E-3
		Y, see ^{86m}Y	-	8E+4	3E-5	1E-7	-	-
39	Yttrium-95[2]	W, see ^{86m}Y	4E+4	2E+5	6E-5	2E-7	-	-
			St wall (5E+4)	-	-	-	7E-4	7E-3
		Y, see ^{86m}Y	-	1E+5	6E-5	2E-7	-	-
40	Zirconium-86	D, all compounds except those given for W and Y	1E+3	4E+3	2E-6	6E-9	2E-5	2E-4
		W, oxides, hydroxides, halides, and nitrates	-	3E+3	1E-6	4E-9	-	-
		Y, carbide	-	2E+3	1E-6	3E-9	-	-
40	Zirconium-88	D, see ^{86}Zr	4E+3	2E+2	9E-8	3E-10	5E-5	5E-4
		W, see ^{86}Zr	-	5E+2	2E-7	7E-10	-	-
		Y, see ^{86}Zr	-	3E+2	1E-7	4E-10	-	-
40	Zirconium-89	D, see ^{86}Zr	2E+3	4E+3	1E-6	5E-9	2E-5	2E-4
		W, see ^{86}Zr	-	2E+3	1E-6	3E-9	-	-
		Y, see ^{86}Zr	-	2E+3	1E-6	3E-9	-	-
40	Zirconium-93	D, see ^{86}Zr	1E+3	6E+0	3E-9	-	-	-
			Bone surf (3E+3)	Bone surf (2E+1)	-	2E-11	4E-5	4E-4
		W, see ^{86}Zr	-	2E+1	1E-8	-	-	-
			-	Bone surf (6E+1)	-	9E-11	-	-
		Y, see ^{86}Zr	-	6E+1	2E-8	-	-	-
			-	Bone surf (7E+1)	-	9E-11	-	-
40	Zirconium-95	D, see ^{86}Zr	1E+3	1E+2	5E-8	-	2E-5	2E-4
			-	Bone surf (3E+2)	-	4E-10	-	-
		W, see ^{86}Zr	-	4E+2	2E-7	5E-10	-	-
		Y, see ^{86}Zr	-	3E+2	1E-7	4E-10	-	-

APPENDIX G TO RH-1000 THROUGH RH-2110
ANNUAL LIMITS ON INTAKE (ALIs) AND DERIVED AIR CONCENTRATIONS (DACs) OF RADIONUCLIDES FOR OCCUPATIONAL EXPOSURE; EFFLUENT CONCENTRATIONS; CONCENTRATIONS FOR RELEASE TO SEWERAGE

			Table 1 Occupational Values			Table 2 Effluent Concentrations		Table 3 Releases to Sewers
			Col. 1	Col. 2	Col. 3	Col. 1	Col. 2	
			Oral Ingestion	Inhalation				
Atomic No.	Radionuclide	Class	ALI (µCi)	ALI (µCi)	DAC (µCi/ml)	Air (µCi/ml)	Water (µCi/ml)	Monthly Average Concentration (µCi/ml)
40	Zirconium-97	D, see ^{86}Zr	6E+2	2E+3	8E-7	3E-9	9E-6	9E-5
		W, see ^{86}Zr	-	1E+3	6E-7	2E-9	-	-
		Y, see ^{86}Zr	-	1E+3	5E-7	2E-9	-	-
41	Niobium-88[2]	W, all compounds except those given for Y	5E+4	2E+5	9E-5	3E-7	-	-
			St wall (7E+4)	-	-	-	1E-3	1E-2
		Y, oxides and hydroxides	-	2E+5	9E-5	3E-7	-	-
41	Niobium-89[2] (66 min)	W, see ^{88}Nb	1E+4	4E+4	2E-5	6E-8	1E-4	1E-3
		Y, see ^{88}Nb	-	4E+4	2E-5	5E-8	-	-
41	Niobium-89 (122 min)	W, see ^{88}Nb	5E+3	2E+4	8E-6	3E-8	7E-5	7E-4
		Y, see ^{88}Nb	-	2E+4	6E-6	2E-8	-	-
41	Niobium-90	W, see ^{88}Nb	1E+3	3E+3	1E-6	4E-9	1E-5	1E-4
		Y, see ^{88}Nb	-	2E+3	1E-6	3E-9	-	-
41	Niobium-93m	W, see ^{88}Nb	9E+3	2E+3	8E-7	3E-9	-	-
			LLI wall (1E+4)	-	-	-	2E-4	2E-3
		Y, see ^{88}Nb	-	2E+2	7E-8	2E-10	-	-
41	Niobium-94	W, see ^{88}Nb	9E+2	2E+2	8E-8	3E-10	1E-5	1E-4
		Y, see ^{88}Nb	-	2E+1	6E-9	2E-11	-	-
41	Niobium-95m	W, see ^{88}Nb	2E+3	3E+3	1E-6	4E-9	-	-
			LLI wall (2E+3)	-	-	-	3E-5	3E-4
		Y, see ^{88}Nb	-	2E+3	9E-7	3E-9	-	-
41	Niobium-95	W, see ^{88}Nb	2E+3	1E+3	5E-7	2E-9	3E-5	3E-4
		Y, see ^{88}Nb	-	1E+3	5E-7	2E-9	-	-
41	Niobium-96	W, see ^{88}Nb	1E+3	3E+3	1E-6	4E-9	2E-5	2E-4
		Y, see ^{88}Nb	-	2E+3	1E-6	3E-9	-	-
41	Niobium-97[2]	W, see ^{88}Nb	2E+4	8E+4	3E-5	1E-7	3E-4	3E-3
		Y, see ^{88}Nb	-	7E+4	3E-5	1E-7	-	-
41	Niobium-98[2]	W, see ^{88}Nb	1E+4	5E+4	2E-5	8E-8	2E-4	2E-3
		Y, see ^{88}Nb	-	5E+4	2E-5	7E-8	-	-
42	Molybdenum-90	D, all compounds except those given for Y	4E+3	7E+3	3E-6	1E-8	3E-5	3E-4
		Y, oxides, hydroxides, and MoS	2E+3	5E+3	2E-6	6E-9	-	-
42	Molybdenum-93m	D, see ^{90}Mo	9E+3	2E+4	7E-6	2E-8	6E-5	6E-4
		Y, see ^{90}Mo	4E+3	1E+4	6E-6	2E-8	-	-
42	Molybdenum-93	D, see ^{90}Mo	4E+3	5E+3	2E-6	8E-9	5E-5	5E-4
		Y, see ^{90}Mo	2E+4	2E+2	8E-8	2E-10	-	-
42	Molybdenum-99	D, see ^{90}Mo	2E+3	3E+3	1E-6	4E-9	-	-
			LLI wall (1E+3)	-	-	-	2E-5	2E-4
		Y, see ^{90}Mo	1E+3	1E+3	6E-7	2E-9	-	-
42	Molybdenum-101[2]	D, see ^{90}Mo	4E+4	1E+5	6E-5	2E-7	-	-
			St wall (5E+4)	-	-	-	7E-4	7E-3
					4E-5	2E-7	-	-

APPENDIX G TO RH-1000 THROUGH RH-2110
ANNUAL LIMITS ON INTAKE (ALIs) AND DERIVED AIR CONCENTRATIONS (DACs) OF RADIONUCLIDES FOR OCCUPATIONAL EXPOSURE; EFFLUENT CONCENTRATIONS; CONCENTRATIONS FOR RELEASE TO SEWERAGE

			Table 1 Occupational Values			Table 2 Effluent Concentrations		Table 3 Releases to Sewers
			Col. 1	Col. 2	Col. 3	Col. 1	Col. 2	
			Oral Ingestion	Inhalation				Monthly Average Concentration
Atomic No.	Radionuclide	Class	ALI (μCi)	ALI (μCi)	DAC (μCi/ml)	Air (μCi/ml)	Water (μCi/ml)	(μCi/ml)
43	Technetium-93m[2]	D, all compounds except those given for W	7E+4	2E+5	6E-5	2E-7	1E-3	1E-2
		W, oxides, hydroxides, halides, and nitrates	-	3E+5	1E-4	4E-7	-	-
43	Technetium-93	D, see ^{93m}Tc	3E+4	7E+4	3E-5	1E-7	4E-4	4E-3
		W, see ^{93m}Tc	-	1E+5	4E-5	1E-7	-	-
43	Technetium-94m[2]	D, see ^{93m}Tc	2E+4	4E+4	2E-5	6E-8	3E-4	3E-3
		W, see ^{93m}Tc	-	6E+4	2E-5	8E-8	-	-
43	Technetium-94	D, see ^{93m}Tc	9E+3	2E+4	8E-6	3E-8	1E-4	1E-3
		W, see ^{93m}Tc	-	2E+4	1E-5	3E-8	-	-
43	Technetium-95m	D, see ^{93m}Tc	4E+3	5E+3	2E-6	8E-9	5E-5	5E-4
		W, see ^{93m}Tc	-	2E+3	8E-7	3E-9	-	-
43	Technetium-95	D, see ^{93m}Tc	1E+4	2E+4	9E-6	3E-8	1E-4	1E-3
		W, see ^{93m}Tc	-	2E+4	8E-6	3E-8	-	-
43	Technetium-96m[2]	D, see ^{93m}Tc	2E+5	3E+5	1E-4	4E-7	2E-3	2E-2
		W, see ^{93m}Tc	-	2E+5	1E-4	3E-7	-	-
43	Technetium-96	D, see ^{93m}Tc	2E+3	3E+3	1E-6	5E-9	3E-5	3E-4
		W, see ^{93m}Tc	-	2E+3	9E-7	3E-9	-	-
43	Technetium-97m	D, see ^{93m}Tc	5E+3	7E+3	3E-6	-	6E-5	6E-4
			St wall -	(7E+3)	-	1E-8	-	-
		W, see ^{93m}Tc	-	1E+3	5E-7	2E-9	-	-
43	Technetium-97	D, see ^{93m}Tc	4E+4	5E+4	2E-5	7E-8	5E-4	5E-3
		W, see ^{93m}Tc	-	6E+3	2E-6	8E-9	-	-
43	Technetium-98	D, see ^{93m}Tc	1E+3	2E+3	7E-7	2E-9	1E-5	1E-4
		W, see ^{93m}Tc	-	3E+2	1E-7	4E-10	-	-
43	Technetium-99m	D, see ^{93m}Tc	8E+4	2E+5	6E-5	2E-7	1E-3	1E-2
		W, see ^{93m}Tc	-	2E+5	1E-4	3E-7	-	-
43	Technetium-99	D, see ^{93m}Tc	4E+3	5E+3	2E-6	-	6E-5	6E-4
			-	St wall (6E+3)	-	8E-9	-	-
		W, see ^{93m}Tc	-	7E+2	3E-7	9E-10	-	-
43	Technetium-101[2]	D, see ^{93m}Tc	9E+4	3E+5	1E-4	5E-7	-	-
			St wall (1E+5)	-	-	-	2E-3	2E-2
		W, see ^{93m}Tc	-	4E+5	2E-4	5E-7	-	-
43	Technetium-104[2]	D, see ^{93m}Tc	2E+4	7E+4	3E-5	1E-7	-	-
			St wall (3E+4)	-	-	-	4E-4	4E-3
		W, see ^{93m}Tc	-	9E+4	4E-5	1E-7	-	-
44	Ruthenium-94[2]	D, all compounds except those given for W and Y	2E+4	4E+4	2E-5	6E-8	2E-4	2E-3
		W, halides	-	6E+4	3E-5	9E-8	-	-
		Y, oxides and hydroxides	-	6E+4	2E-5	8E-8	-	-
44	Ruthenium-97	D, see ^{94}Ru	8E+3	2E+4	8E-6	3E-8	1E-4	1E-3
		W, see ^{94}Ru	-	1E+4	5E-6	2E-8	-	-
		Y, see ^{94}Ru	-	1E+4	5E-6	2E-8	-	-

APPENDIX G TO RH-1000 THROUGH RH-2110
ANNUAL LIMITS ON INTAKE (ALIs) AND DERIVED AIR CONCENTRATIONS (DACs) OF RADIONUCLIDES FOR OCCUPATIONAL EXPOSURE; EFFLUENT CONCENTRATIONS; CONCENTRATIONS FOR RELEASE TO SEWERAGE

			Table 1 Occupational Values			Table 2 Effluent Concentrations		Table 3 Releases to Sewers
			Col. 1	Col. 2	Col. 3	Col. 1	Col. 2	
			Oral Ingestion	Inhalation				
Atomic No.	Radionuclide	Class	ALI (µCi)	ALI (µCi)	DAC (µCi/ml)	Air (µCi/ml)	Water (µCi/ml)	Monthly Average Concentration (µCi/ml)
44	Ruthenium-103	D, see ^{94}Ru	2E+3	2E+3	7E-7	2E-9	3E-5	3E-4
		W, see ^{94}Ru	-	1E+3	4E-7	1E-9	-	-
		Y, see ^{94}Ru	-	6E+2	3E-7	9E-10	-	-
44	Ruthenium-105	D, see ^{94}Ru	5E+3	1E+4	6E-6	2E-8	7E-5	7E-4
		W, see ^{94}Ru	-	1E+4	6E-6	2E-8	-	-
		Y, see ^{94}Ru	-	1E+4	5E-6	2E-8	-	-
44	Ruthenium-106	D, see ^{94}Ru	2E+2	9E+1	4E-8	1E-10	-	-
			LLI wall (2E+2)	-	-	-	3E-6	3E-5
		W, see ^{94}Ru	-	5E+1	2E-8	8E-11	-	-
		Y, see ^{94}Ru	-	1E+1	5E-9	2E-11	-	-
45	Rhodium-99m	D, all compounds except those given for W and Y	2E+4	6E+4	2E-5	8E-8	2E-4	2E-3
		W, halides	-	8E+4	3E-5	1E-7	-	-
		Y, oxides and hydroxides	-	7E+4	3E-5	9E-8	-	-
45	Rhodium-99	D, see ^{99m}Rh	2E+3	3E+3	1E-6	4E-9	3E-5	3E-4
		W, see ^{99m}Rh	-	2E+3	9E-7	3E-9	-	-
		Y, see ^{99m}Rh	-	2E+3	8E-7	3E-9	-	-
45	Rhodium-100	D, see ^{99m}Rh	2E+3	5E+3	2E-6	7E-9	2E-5	2E-4
		W, see ^{99m}Rh	-	4E+3	2E-6	6E-9	-	-
		Y, see ^{99m}Rh	-	4E+3	2E-6	5E-9	-	-
45	Rhodium-101m	D, see ^{99m}Rh	6E+3	1E+4	5E-6	2E-8	8E-5	8E-4
		W, see ^{99m}Rh	-	8E+3	4E-6	1E-8	-	-
		Y, see ^{99m}Rh	-	8E+3	3E-6	1E-8	-	-
45	Rhodium-101	D, see ^{99m}Rh	2E+3	5E+2	2E-7	7E-10	3E-5	3E-4
		W, see ^{99m}Rh	-	8E+2	3E-7	1E-9	-	-
		Y, see ^{99m}Rh	-	2E+2	6E-8	2E-10	-	-
45	Rhodium-102m	D, see ^{99m}Rh	1E+3	5E+2	2E-7	7E-10	-	-
			LLI wall (1E+3)	-	-	-	2E-5	2E-4
		W, see ^{99m}Rh	-	4E+2	2E-7	5E-10	-	-
		Y, see ^{99m}Rh	-	1E+2	5E-8	2E-10	-	-
45	Rhodium-102	D, see ^{99m}Rh	6E+2	9E+1	4E-8	1E-10	8E-6	8E-5
		W, see ^{99m}Rh	-	2E+2	7E-8	2E-10	-	-
		Y, see ^{99m}Rh	-	6E+1	2E-8	8E-11	-	-
45	Rhodium-103m[2]	D, see ^{99m}Rh	4E+5	1E+6	5E-4	2E-6	6E-3	6E-2
		W, see ^{99m}Rh	-	1E+6	5E-4	2E-6	-	-
		Y, see ^{99m}Rh	-	1E+6	5E-4	2E-6	-	-
45	Rhodium-105	D, see ^{99m}Rh	4E+3	1E+4	5E-6	2E-8	-	-
			LLI wall (4E+3)	-	-	-	5E-5	5E-4
		W, see ^{99m}Rh	-	6E+3	3E-6	9E-9	-	-
		Y, see ^{99m}Rh	-	6E+3	2E-6	8E-9	-	-
45	Rhodium-106m	D, see ^{99m}Rh	8E+3	3E+4	1E-5	4E-8	1E-4	1E-3
		W, see ^{99m}Rh	-	4E+4	2E-5	5E-8	-	-
		Y, see ^{99m}Rh	-	4E+4	1E-5	5E-8	-	-
45	Rhodium-107[2]	D, see ^{99m}Rh	7E+4	2E+5	1E-4	3E-7	-	-
			St wall (9E+4)	-	-	-	1E-3	1E-2
		W, see ^{99m}Rh	-	3E+5	1E-4	4E-7	-	-
		Y, see ^{99m}Rh	-	3E+5	1E-4	3E-7	-	-

APPENDIX G TO RH-1000 THROUGH RH-2110
ANNUAL LIMITS ON INTAKE (ALIs) AND DERIVED AIR CONCENTRATIONS (DACs) OF RADIONUCLIDES FOR OCCUPATIONAL EXPOSURE; EFFLUENT CONCENTRATIONS; CONCENTRATIONS FOR RELEASE TO SEWERAGE

			Table 1 Occupational Values			Table 2 Effluent Concentrations		Table 3 Releases to Sewers
			Col. 1	Col. 2	Col. 3	Col. 1	Col. 2	
			Oral Ingestion	Inhalation				
Atomic No.	Radionuclide	Class	ALI (µCi)	ALI (µCi)	DAC (µCi/ml)	Air (µCi/ml)	Water (µCi/ml)	Monthly Average Concentration (µCi/ml)
46	Palladium-100	D, all compounds except those given for W and Y	1E+3	1E+3	6E-7	2E-9	2E-5	2E-4
		W, nitrates	-	1E+3	5E-7	2E-9	-	-
		Y, oxides and hydroxides	-	1E+3	6E-7	2E-9	-	-
46	Palladium-101	D, see ^{100}Pd	1E+4	3E+4	1E-5	5E-8	2E-4	2E-3
		W, see ^{100}Pd	-	3E+4	1E-5	5E-8	-	-
		Y, see ^{100}Pd	-	3E+4	1E-5	4E-8	-	-
46	Palladium-103	D, see ^{100}Pd	6E+3	6E+3	3E-6	9E-9	-	-
			LLI wall (7E+3)	-	-	-	1E-4	1E-3
		W, see ^{100}Pd	-	4E+3	2E-6	6E-9	-	-
		Y, see ^{100}Pd	-	4E+3	1E-6	5E-9	-	-
46	Palladium-107	D, see ^{100}Pd	3E+4	2E+4	9E-6	-	-	-
			LLI wall (4E+4)	Kidneys (2E+4)	-	3E-8	5E-4	5E-3
		W, see ^{100}Pd	-	7E+3	3E-6	1E-8	-	-
		Y, see ^{100}Pd	-	4E+2	2E-7	6E-10	-	-
46	Palladium-109	D, see ^{100}Pd	2E+3	6E+3	3E-6	9E-9	3E-5	3E-4
		W, see ^{100}Pd	-	5E+3	2E-6	8E-9	-	-
		Y, see ^{100}Pd	-	5E+3	2E-6	6E-9	-	-
47	Silver-102[2]	D, all compounds except those given for W and Y	5E+4	2E+5	8E-5	2E-7	-	-
			St wall (6E+4)	-	-	-	9E-4	9E-3
		W, nitrates and sulfides	-	2E+5	9E-5	3E-7	-	-
		Y, oxides and hydroxides	-	2E+5	8E-5	3E-7	-	-
47	Silver-103[2]	D, see ^{102}Ag	4E+4	1E+5	4E-5	1E-7	5E-4	5E-3
		W, see ^{102}Ag	-	1E+5	5E-5	2E-7	-	-
		Y, see ^{102}Ag	-	1E+5	5E-5	2E-7	-	-
47	Silver-104m[2]	D, see ^{102}Ag	3E+4	9E+4	4E-5	1E-7	4E-4	4E-3
		W, see ^{102}Ag	-	1E+5	5E-5	2E-7	-	-
		Y, see ^{102}Ag	-	1E+5	5E-5	2E-7	-	-
47	Silver-104[2]	D, see ^{102}Ag	2E+4	7E+4	3E-5	1E-7	3E-4	3E-3
		W, see ^{102}Ag	-	1E+5	6E-5	2E-7	-	-
		Y, see ^{102}Ag	-	1E+5	6E-5	2E-7	-	-
47	Silver-105	D, see ^{102}Ag	3E+3	1E+3	4E-7	1E-9	4E-5	4E-4
		W, see ^{102}Ag	-	2E+3	7E-7	2E-9	-	-
		Y, see ^{102}Ag	-	2E+3	7E-7	2E-9	-	-
47	Silver-106m	D, see ^{102}Ag	8E+2	7E+2	3E-7	1E-9	1E-5	1E-4
		W, see ^{102}Ag	-	9E+2	4E-7	1E-9	-	-
		Y, see ^{102}Ag	-	9E+2	4E-7	1E-9	-	-
47	Silver-106[2]	D, see ^{102}Ag	6E+4	2E+5	8E-5	3E-7	-	-
			St. wall (6E+4)	-	-	-	9E-4	9E-3
		W, see ^{102}Ag	-	2E+5	9E-5	3E-7	-	-
		Y, see ^{102}Ag	-	2E+5	8E-5	3E-7	-	-
47	Silver-108m	D, see ^{102}Ag	6E+2	2E+2	8E-8	3E-10	9E-6	9E-5
		W, see ^{102}Ag	-	3E+2	1E-7	4E-10	-	-
		Y, see ^{102}Ag	-	2E+1	1E-8	3E-11	-	-
47	Silver-110m	D, see ^{102}Ag	5E+2	1E+2	5E-8	2E-10	6E-6	6E-5
		W, see ^{102}Ag	-	2E+2	8E-8	3E-10	-	-
		Y, see ^{102}Ag	-	9E+1	4E-8	1E-10	-	-

APPENDIX G TO RH-1000 THROUGH RH-2110
ANNUAL LIMITS ON INTAKE (ALIs) AND DERIVED AIR CONCENTRATIONS (DACs) OF RADIONUCLIDES FOR OCCUPATIONAL EXPOSURE; EFFLUENT CONCENTRATIONS; CONCENTRATIONS FOR RELEASE TO SEWERAGE

			15					
			Table 1 Occupational Values			Table 2 Effluent Concentrations		Table 3 Releases to Sewers
			Col. 1	Col. 2	Col. 3	Col. 1	Col. 2	
			Oral Ingestion	Inhalation				
Atomic No.	Radionuclide	Class	ALI (µCi)	ALI (µCi)	DAC (µCi/ml)	Air (µCi/ml)	Water (µCi/ml)	Monthly Average Concentration (µCi/ml)
47	Silver-111	D, see ^{102}Ag	9E+2	2E+3	6E-7	-	-	-
			LLI wall (1E+3)	Liver (2E+3)	-	2E-9	2E-5	2E-4
		W, see ^{102}Ag	-	9E+2	4E-7	1E-9	-	-
		Y, see ^{102}Ag	-	9E+2	4E-7	1E-9	-	-
47	Silver-112	D, see ^{102}Ag	3E+3	8E+3	3E-6	1E-8	4E-5	4E-4
		W, see ^{102}Ag	-	1E+4	4E-6	1E-8	-	-
		Y, see ^{102}Ag	-	9E+3	4E-6	1E-8	-	-
47	Silver-115[2]	D, see ^{102}Ag	3E+4	9E+4	4E-5	1E-7	-	-
			St wall (3E+4)	-	-	-	4E-4	4E-3
		W, see ^{102}Ag	-	9E+4	4E-5	1E-7	-	-
		Y, see ^{102}Ag	-	8E+4	3E-5	1E-7	-	-
48	Cadmium-104[2]	D, all compounds except those given for W and Y	2E+4	7E+4	3E-5	9E-8	3E-4	3E-3
		W, sulfides, halides, and nitrates	-	1E+5	5E-5	2E-7	-	-
		Y, oxides and hydroxides	-	1E+5	5E-5	2E-7	-	-
48	Cadmium-107	D, see ^{104}Cd	2E+4	5E+4	2E-5	8E-8	3E-4	3E-3
		W, see ^{104}Cd	-	6E+4	2E-5	8E-8	-	-
		Y, see ^{104}Cd	-	5E+4	2E-5	7E-8	-	-
48	Cadmium-109	D, see ^{104}Cd	3E+2	4E+1	1E-8	-	-	-
			Kidneys (4E+2)	Kidneys (5E+1)	-	7E-11	6E-6	6E-5
		W, see ^{104}Cd	-	1E+2	5E-8	-	-	-
			-	Kidneys (1E+2)	-	2E-10	-	-
		Y, see ^{104}Cd	-	1E+2	5E-8	2E-10	-	-
48	Cadmium-113m	D, see ^{104}Cd	2E+1	2E+0	1E-9	-	-	-
			Kidneys (4E+1)	Kidneys (4E+0)	-	5E-12	5E-7	5E-6
		W, see ^{104}Cd	-	8E+0	4E-9	-	-	-
			-	Kidneys (1E+1)	-	2E-11	-	-
		Y, see ^{104}Cd	-	1E+1	5E-9	2E-11	-	-
48	Cadmium-113	D, see ^{104}Cd	2E+1	2E+0	9E-10	-	-	-
			Kidneys (3E+1)	Kidneys (3E+0)	-	5E-12	4E-7	4E-6
		W, see ^{104}Cd	-	8E+0	3E-9	-	-	-
			-	Kidneys (1E+1)	-	2E-11	-	-
		Y, see ^{104}Cd	-	1E+1	6E-9	2E-11	-	-
48	Cadmium-115m	D, see ^{104}Cd	3E+2	5E+1	2E-8	-	4E-6	4E-5
			-	Kidneys (8E+1)	-	1E-10	-	-
		W, see ^{104}Cd	-	1E+2	5E-8	2E-10	-	-
		Y, see ^{104}Cd	-	1E+2	6E-8	2E-10	-	-
48	Cadmium-115	D, see ^{104}Cd	9E+2	1E+3	6E-7	2E-9	-	-
			LLI wall (1E+3)	-	-	-	1E-5	1E-4
		W, see ^{104}Cd	-	1E+3	5E-7	2E-9	-	-
		Y, see ^{104}Cd	-	1E+3	6E-7	2E-9	-	-
48	Cadmium-117m	D, see ^{104}Cd	5E+3	1E+4	5E-6	2E-8	6E-5	6E-4
		W, see ^{104}Cd	-	2E+4	7E-6	2E-8	-	-
		Y, see ^{104}Cd	-	1E+4	6E-6	2E-8	-	-

APPENDIX G TO RH-1000 THROUGH RH-2110
ANNUAL LIMITS ON INTAKE (ALIs) AND DERIVED AIR CONCENTRATIONS (DACs) OF RADIONUCLIDES FOR OCCUPATIONAL EXPOSURE; EFFLUENT CONCENTRATIONS; CONCENTRATIONS FOR RELEASE TO SEWERAGE

			Table 1 Occupational Values			Table 2 Effluent Concentrations		Table 3 Releases to Sewers
			Col. 1	Col. 2	Col. 3	Col. 1	Col. 2	
			Oral Ingestion	Inhalation				
Atomic No.	Radionuclide	Class	ALI (μCi)	ALI (μCi)	DAC (μCi/ml)	Air (μCi/ml)	Water (μCi/ml)	Monthly Average Concentration (μCi/ml)
48	Cadmium-117	D, see ^{104}Cd	5E+3	1E+4	5E-6	2E-8	6E-5	6E-4
		W, see ^{104}Cd	-	2E+4	7E-6	2E-8	-	-
		Y, see ^{104}Cd	-	1E+4	6E-6	2E-8	-	-
49	Indium-109	D, all compounds except those given for W	2E+4	4E+4	2E-5	6E-8	3E-4	3E-3
		W, oxides, hydroxides, halides, and nitrates	-	6E+4	3E-5	9E-8	-	-
49	Indium-110[2] (69.1 min)	D, see ^{109}In	2E+4	4E+4	2E-5	6E-8	2E-4	2E-3
		W, see ^{109}In	-	6E+4	2E-5	8E-8	-	-
49	Indium-110 (4.9 h)	D, see ^{109}In	5E+3	2E+4	7E-6	2E-8	7E-5	7E-4
		W, see ^{109}In	-	2E+4	8E-6	3E-8	-	-
49	Indium-111	D, see ^{109}In	4E+3	6E+3	3E-6	9E-9	6E-5	6E-4
		W, see ^{109}In	-	6E+3	3E-6	9E-9	-	-
49	Indium-112[2]	D, see ^{109}In	2E+5	6E+5	3E-4	9E-7	2E-3	2E-2
		W, see ^{109}In	-	7E+5	3E-4	1E-6	-	-
49	Indium-113m[2]	D, see ^{109}In	5E+4	1E+5	6E-5	2E-7	7E-4	7E-3
		W, see ^{109}In	-	2E+5	8E-5	3E-7	-	-
49	Indium-114m	D, see ^{109}In	3E+2	6E+1	3E-8	9E-11	-	-
			LLI wall (4E+2)	-	-	-	5E-6	5E-5
		W, see ^{109}In	-	1E+2	4E-8	1E-10	-	-
49	Indium-115m	D, see ^{109}In	1E+4	4E+4	2E-5	6E-8	2E-4	2E-3
		W, see ^{109}In	-	5E+4	2E-5	7E-8	-	-
49	Indium-115	D, see ^{109}In	4E+1	1E+0	6E-10	2E-12	5E-7	5E-6
		W, see ^{109}In	-	5E+0	2E-9	8E-12	-	-
49	Indium-116m[2]	D, see ^{109}In	2E+4	8E+4	3E-5	1E-7	3E-4	3E-3
		W, see ^{109}In	-	1E+5	5E-5	2E-7	-	-
49	Indium-117m[2]	D, see ^{109}In	1E+4	3E+4	1E-5	5E-8	2E-4	2E-3
		W, see ^{109}In	-	4E+4	2E-5	6E-8	-	-
49	Indium-117[2]	D, see ^{109}In	6E+4	2E+5	7E-5	2E-7	8E-4	8E-3
		W, see ^{109}In	-	2E+5	9E-5	3E-7	-	-
49	Indium-119m[2]	D, see ^{109}In	4E+4	1E+5	5E-5	2E-7	-	-
			St wall (5E+4)	-	-	-	7E-4	7E-3
		W, see ^{109}In	-	1E+5	6E-5	2E-7	-	-
50	Tin-110	D, all compounds except those given for W	4E+3	1E+4	5E-6	2E-8	5E-5	5E-4
		W, sulfides, oxides, hydroxides, halides, nitrates, and stannic phosphate	-	1E+4	5E-6	2E-8	-	-
50	Tin-111[2]	D, see ^{110}Sn	7E+4	2E+5	9E-5	3E-7	1E-3	1E-2
		W, see ^{110}Sn	-	3E+5	1E-4	4E-7	-	-
50	Tin-113	D, see ^{110}Sn	2E+3	1E+3	5E-7	2E-9	-	-
			LLI wall (2E+3)	-	-	-	3E-5	3E-4
		W, see ^{110}Sn	-	5E+2	2E-7	8E-10	-	-

APPENDIX G TO RH-1000 THROUGH RH-2110
ANNUAL LIMITS ON INTAKE (ALIs) AND DERIVED AIR CONCENTRATIONS (DACs) OF RADIONUCLIDES FOR OCCUPATIONAL EXPOSURE; EFFLUENT CONCENTRATIONS; CONCENTRATIONS FOR RELEASE TO SEWERAGE

			Table 1 Occupational Values			Table 2 Effluent Concentrations		Table 3 Releases to Sewers
			Col. 1 Oral Ingestion	Col. 2 Inhalation	Col. 3 Inhalation	Col. 1	Col. 2	
Atomic No.	Radionuclide	Class	ALI (µCi)	ALI (µCi)	DAC (µCi/ml)	Air (µCi/ml)	Water (µCi/ml)	Monthly Average Concentration (µCi/ml)
50	Tin-117m	D, see ^{110}Sn	2E+3	1E+3	5E-7	-	-	-
			LLI wall (2E+3)	Bone surf (2E+3)	-	3E-9	3E-5	3E-4
		W, see ^{110}Sn	-	1E+3	6E-7	2E-9	-	-
50	Tin-119m	D, see ^{110}Sn	3E+3	2E+3	1E-6	3E-9	-	-
			LLI wall (4E+3)	-	-	-	6E-5	6E-4
		W, see ^{110}Sn	-	1E+3	4E-7	1E-9	-	-
50	Tin-121m	D, see ^{110}Sn	3E+3	9E+2	4E-7	1E-9	-	-
			LLI wall (4E+3)	-	-	-	5E-5	5E-4
		W, see ^{110}Sn	-	5E+2	2E-7	8E-10	-	-
50	Tin-121	D, see ^{110}Sn	6E+3	2E+4	6E-6	2E-8	-	-
			LLI wall (6E+3)	-	-	-	8E-5	8E-4
		W, see ^{110}Sn	-	1E+4	5E-6	2E-8	-	-
50	Tin-123m[2]	D, see ^{110}Sn	5E+4	1E+5	5E-5	2E-7	7E-4	7E-3
		W, see ^{110}Sn	-	1E+5	6E-5	2E-7	-	-
50	Tin-123	D, see ^{110}Sn	5E+2	6E+2	3E-7	9E-10	-	-
			LLI wall (6E+2)	-	-	-	9E-6	9E-5
		W, see ^{110}Sn	-	2E+2	7E-8	2E-10	-	-
50	Tin-125	D, see ^{110}Sn	4E+2	9E+2	4E-7	1E-9	-	-
			LLI wall (5E+2)	-	-	-	6E-6	6E-5
		W, see ^{110}Sn	-	4E+2	1E-7	5E-10	-	-
50	Tin-126	D, see ^{110}Sn	3E+2	6E+1	2E-8	8E-11	4E-6	4E-5
		W, see ^{110}Sn	-	7E+1	3E-8	9E-11	-	-
50	Tin-127	D, see ^{110}Sn	7E+3	2E+4	8E-6	3E-8	9E-5	9E-4
		W, see ^{110}Sn	-	2E+4	8E-6	3E-8	-	-
50	Tin-128[2]	D, see ^{110}Sn	9E+3	3E+4	1E-5	4E-8	1E-4	1E-3
		W, see ^{110}Sn	-	4E+4	1E-5	5E-8	-	-
51	Antimony-115[2]	D, all compounds except those given for W	8E+4	2E+5	1E-4	3E-7	1E-3	1E-2
		W, oxides, hydroxides, halides, sulfides, sulfates, and nitrates	-	3E+5	1E-4	4E-7	-	-
51	Antimony-116m[2]	D, see ^{115}Sb	2E+4	7E+4	3E-5	1E-7	3E-4	3E-3
		W, see ^{115}Sb	-	1E+5	6E-5	2E-7	-	-
51	Antimony-116[2]	D, see ^{115}Sb	7E+4	3E+5	1E-4	4E-7	-	-
			St wall (9E+4)	-	-	-	1E-3	1E-2
		W, see ^{115}Sb	-	3E+5	1E-4	5E-7	-	-
51	Antimony-117	D, see ^{115}Sb	7E+4	2E+5	9E-5	3E-7	9E-4	9E-3
		W, see ^{115}Sb	-	3E+5	1E-4	4E-7	-	-
51	Antimony-118m	D, see ^{115}Sb	6E+3	2E+4	8E-6	3E-8	7E-5	7E-4
		W, see ^{115}Sb	5E+3	2E+4	9E-6	3E-8	-	-
51	Antimony-119	D, see ^{115}Sb	2E+4	5E+4	2E-5	6E-8	2E-4	2E-3
		W, see ^{115}Sb	2E+4	3E+4	1E-5	4E-8	-	-

APPENDIX G TO RH-1000 THROUGH RH-2110
ANNUAL LIMITS ON INTAKE (ALIs) AND DERIVED AIR CONCENTRATIONS (DACs) OF RADIONUCLIDES FOR OCCUPATIONAL EXPOSURE; EFFLUENT CONCENTRATIONS; CONCENTRATIONS FOR RELEASE TO SEWERAGE

			18					
			Table 1 Occupational Values			Table 2 Effluent Concentrations		Table 3 Releases to Sewers
			Col. 1	Col. 2	Col. 3	Col. 1	Col. 2	
			Oral Ingestion	Inhalation				Monthly Average
Atomic No.	Radionuclide	Class	ALI (μCi)	ALI (μCi)	DAC (μCi/ml)	Air (μCi/ml)	Water (μCi/ml)	Concentration (μCi/ml)
51	Antimony-120[2] (16 min)	D, see ^{115}Sb	1E+5	4E+5	2E-4	6E-7	-	-
			St wall (2E+5)	-	-	-	2E-3	2E-2
		W, see ^{115}Sb	-	5E+5	2E-4	7E-7	-	-
51	Antimony-120 (5.76 d)	D, see ^{115}Sb	1E+3	2E+3	9E-7	3E-9	1E-5	1E-4
		W, see ^{115}Sb	9E+2	1E+3	5E-7	2E-9	-	-
51	Antimony-122	D, see ^{115}Sb	8E+2	2E+3	1E-6	3E-9	-	-
			LLI wall (8E+2)	-	-	-	1E-5	1E-4
		W, see ^{115}Sb	7E+2	1E+3	4E-7	2E-9	-	-
51	Antimony-124m[2]	D, see ^{115}Sb	3E+5	8E+5	4E-4	1E-6	3E-3	3E-2
		W, see ^{115}Sb	2E+5	6E+5	2E-4	8E-7	-	-
51	Antimony-124	D, see ^{115}Sb	6E+2	9E+2	4E-7	1E-9	7E-6	7E-5
		W, see ^{115}Sb	5E+2	2E+2	1E-7	3E-10	-	-
51	Antimony-125	D, see ^{115}Sb	2E+3	2E+3	1E-6	3E-9	3E-5	3E-4
		W, see ^{115}Sb	-	5E+2	2E-7	7E-10	-	-
51	Antimony-126m[2]	D, see ^{115}Sb	5E+4	2E+5	8E-5	3E-7	-	-
			St wall (7E+4)	-	-	-	9E-4	9E-3
		W, see ^{115}Sb	-	2E+5	8E-5	3E-7	-	-
51	Antimony-126	D, see ^{115}Sb	6E+2	1E+3	5E-7	2E-9	7E-6	7E-5
		W, see ^{115}Sb	5E+2	5E+2	2E-7	7E-10	-	-
51	Antimony-127	D, see ^{115}Sb	8E+2	2E+3	9E-7	3E-9	-	-
			LLI wall (8E+2)	-	-	-	1E-5	1E-4
		W, see ^{115}Sb	7E+2	9E+2	4E-7	1E-9	-	-
51	Antimony-128[2] (10.4 min)	D, see ^{115}Sb	8E+4	4E+5	2E-4	5E-7	-	-
			St wall (1E+5)	-	-	-	1E-3	1E-2
		W, see ^{115}Sb	-	4E+5	2E-4	6E-7	-	-
51	Antimony-128 (9.01 h)	D, see ^{115}Sb	1E+3	4E+3	2E-6	6E-9	2E-5	2E-4
		W, see ^{115}Sb	-	3E+3	1E-6	5E-9	-	-
51	Antimony-129	D, see ^{115}Sb	3E+3	9E+3	4E-6	1E-8	4E-5	4E-4
		W, see ^{115}Sb	-	9E+3	4E-6	1E-8	-	-
51	Antimony-130[2]	D, see ^{115}Sb	2E+4	6E+4	3E-5	9E-8	3E-4	3E-3
		W, see ^{115}Sb	-	8E+4	3E-5	1E-7	-	-
51	Antimony-131[2]	D, see ^{115}Sb	1E+4	2E+4	1E-5	-	-	-
			Thyroid (2E+4)	Thyroid (4E+4)	-	6E-8	2E-4	2E-3
		W, see ^{115}Sb	-	2E+4	1E-5		-	-
			-	Thyroid (4E+4)	-	6E-8	-	-
52	Tellurium-116	D, all compounds except those given for W	8E+3	2E+4	9E-6	3E-8	1E-4	1E-3
		W, oxides, hydroxides, and nitrates	-	3E+4	1E-5	4E-8	-	-
52	Tellurium-121m	D, see ^{116}Te	5E+2	2E+2	8E-8	-	-	-
			Bone surf (7E+2)	Bone surf (4E+2)	-	5E-10	1E-5	1E-4
		W, see ^{116}Te	-	4E+2	2E-7	6E-10	-	-

APPENDIX G TO RH-1000 THROUGH RH-2110
ANNUAL LIMITS ON INTAKE (ALIs) AND DERIVED AIR CONCENTRATIONS (DACs) OF RADIONUCLIDES FOR OCCUPATIONAL EXPOSURE; EFFLUENT CONCENTRATIONS; CONCENTRATIONS FOR RELEASE TO SEWERAGE

			Table 1 Occupational Values			Table 2 Effluent Concentrations		Table 3 Releases to Sewers
			Col. 1	Col. 2	Col. 3	Col. 1	Col. 2	
			Oral Ingestion	Inhalation				
Atomic No.	Radionuclide	Class	ALI (µCi)	ALI (µCi)	DAC (µCi/ml)	Air (µCi/ml)	Water (µCi/ml)	Monthly Average Concentration (µCi/ml)
52	Tellurium-121	D, see ^{116}Te	3E+3	4E+3	2E-6	6E-9	4E-5	4E-4
		W, see ^{116}Te	-	3E+3	1E-6	4E-9	-	-
52	Tellurium-123m	D, see ^{116}Te	6E+2	2E+2	9E-8	-	-	-
			Bone surf (1E+3)	Bone surf (5E+2)	-	8E-10	1E-5	1E-4
		W, see ^{116}Te	-	5E+2	2E-7	8E-10	-	-
52	Tellurium-123	D, see ^{116}Te	5E+2	2E+2	8E-8	-	-	-
			Bone surf (1E+3)	Bone surf (5E+2)	-	7E-10	2E-5	2E-4
		W, see ^{116}Te	-	4E+2	2E-7	-	-	-
			-	Bone surf (1E+3)	-	2E-9	-	-
52	Tellurium-125m	D, see ^{116}Te	1E+3	4E+2	2E-7	-	-	-
			Bone surf (1E+3)	Bone surf (1E+3)	-	1E-9	2E-5	2E-4
		W, see ^{116}Te	-	7E+2	3E-7	1E-9	-	-
52	Tellurium-127m	D, see ^{116}Te	6E+2	3E+2	1E-7	-	9E-6	9E-5
			-	Bone surf (4E+2)	-	6E-10	-	-
		W, see ^{116}Te	-	3E+2	1E-7	4E-10	-	-
52	Tellurium-127	D, see ^{116}Te	7E+3	2E+4	9E-6	3E-8	1E-4	1E-3
		W, see ^{116}Te	-	2E+4	7E-6	2E-8	-	-
52	Tellurium-129m	D, see ^{116}Te	5E+2	6E+2	3E-7	9E-10	7E-6	7E-5
		W, see ^{116}Te	-	2E+2	1E-7	3E-10	-	-
52	Tellurium-129[2]	D, see ^{116}Te	3E+4	6E+4	3E-5	9E-8	4E-4	4E-3
		W, see ^{116}Te	-	7E+4	3E-5	1E-7	-	-
52	Tellurium-131m	D, see ^{116}Te	3E+2	4E+2	2E-7	-	-	-
			Thyroid (6E+2)	Thyroid (1E+3)	-	2E-9	8E-6	8E-5
		W, see ^{116}Te	-	4E+2	2E-7	-	-	-
			-	Thyroid (9E+2)	-	1E-9	-	-
52	Tellurium-131[2]	D, see ^{116}Te	3E+3	5E+3	2E-6	-	-	-
			Thyroid (6E+3)	Thyroid (1E+4)	-	2E-8	8E-5	8E-4
		W, see ^{116}Te	-	5E+3	2E-6	-	-	-
			-	Thyroid (1E+4)	-	2E-8	-	-
52	Tellurium-132	D, see ^{116}Te	2E+2	2E+2	9E-8	-	-	-
			Thyroid (7E+2)	Thyroid (8E+2)	-	1E-9	9E-6	9E-5
		W, see ^{116}Te	-	2E+2	9E-8	-	-	-
			-	Thyroid (6E+2)	-	9E-10	-	-
52	Tellurium-133m[2]	D, see ^{116}Te	3E+3	5E+3	2E-6	-	-	-
			Thyroid (6E+3)	Thyroid (1E+4)	-	2E-8	9E-5	9E-4
		W, see ^{116}Te	-	5E+3	2E-6	-	-	-
			-	Thyroid (1E+4)	-	2E-8	-	-

APPENDIX G TO RH-1000 THROUGH RH-2110
ANNUAL LIMITS ON INTAKE (ALIs) AND DERIVED AIR CONCENTRATIONS (DACs) OF RADIONUCLIDES FOR OCCUPATIONAL EXPOSURE; EFFLUENT CONCENTRATIONS; CONCENTRATIONS FOR RELEASE TO SEWERAGE

			Table 1 Occupational Values			Table 2 Effluent Concentrations		Table 3 Releases to Sewers
			Col. 1	Col. 2	Col. 3	Col. 1	Col. 2	
			Oral Ingestion	Inhalation				
Atomic No.	Radionuclide	Class	ALI (µCi)	ALI (µCi)	DAC (µCi/ml)	Air (µCi/ml)	Water (µCi/ml)	Monthly Average Concentration (µCi/ml)
52	Tellurium-133[2]	D, see ^{116}Te	1E+4	2E+4	9E-6	-	-	-
			Thyroid (3E+4)	Thyroid (6E+4)	-	8E-8	4E-4	4E-3
		W, see ^{116}Te	-	2E+4	9E-6	-	-	-
			-	Thyroid (6E+4)	-	8E-8	-	-
52	Tellurium-134[2]	D, see ^{116}Te	2E+4	2E+4	1E-5	-	-	-
			Thyroid (2E+4)	Thyroid (5E+4)	-	7E-8	3E-4	3E-3
		W, see ^{116}Te	-	2E+4	1E-5	-	-	-
			-	Thyroid (5E+4)	-	7E-8	-	-
53	Iodine-120m[2]	D, all compounds	1E+4	2E+4	9E-6	3E-8	-	-
			Thyroid (1E+4)	-	-	-	2E-4	2E-3
53	Iodine-120[2]	D, all compounds	4E+3	9E+3	4E-6	-	-	-
			Thyroid (8E+3)	Thyroid (1E+4)	-	2E-8	1E-4	1E-3
53	Iodine-121	D, all compounds	1E+4	2E+4	8E-6	-	-	-
			Thyroid (3E+4)	Thyroid (5E+4)	-	7E-8	4E-4	4E-3
53	Iodine-123	D, all compounds	3E+3	6E+3	3E-6	-	-	-
			Thyroid (1E+4)	Thyroid (2E+4)	-	2E-8	1E-4	1E-3
53	Iodine-124	D, all compounds	5E+1	8E+1	3E-8	-	-	-
			Thyroid (2E+2)	Thyroid (3E+2)	-	4E-10	2E-6	2E-5
53	Iodine-125	D, all compounds	4E+1	6E+1	3E-8	-	-	-
			Thyroid (1E+2)	Thyroid (2E+2)	-	3E-10	2E-6	2E-5
53	Iodine-126	D, all compounds	2E+1	4E+1	1E-8	-	-	-
			Thyroid (7E+1)	Thyroid (1E+2)	-	2E-10	1E-6	1E-5
53	Iodine-128[2]	D, all compounds	4E+4	1E+5	5E-5	2E-7	-	-
			St wall (6E+4)	-	-	-	8E-4	8E-3
53	Iodine-129	D, all compounds	5E+0	9E+0	4E-9	-	-	-
			Thyroid (2E+1)	Thyroid (3E+1)	-	4E-11	2E-7	2E-6
53	Iodine-130	D, all compounds	4E+2	7E+2	3E-7	-	-	-
			Thyroid (1E+3)	Thyroid (2E+3)	-	3E-9	2E-5	2E-4
53	Iodine-131	D, all compounds	3E+1	5E+1	2E-8	-	-	-
			Thyroid (9E+1)	Thyroid (2E+2)	-	2E-10	1E-6	1E-5
53	Iodine-132m[2]	D, all compounds	4E+3	8E+3	4E-6	-	-	-
			Thyroid (1E+4)	Thyroid (2E+4)	-	3E-8	1E-4	1E-3
53	Iodine-132	D, all compounds	4E+3	8E+3	3E-6	-	-	-
			Thyroid (9E+3)	Thyroid (1E+4)	-	2E-8	1E-4	1E-3

APPENDIX G TO RH-1000 THROUGH RH-2110
ANNUAL LIMITS ON INTAKE (ALIs) AND DERIVED AIR CONCENTRATIONS (DACs) OF RADIONUCLIDES FOR OCCUPATIONAL EXPOSURE; EFFLUENT CONCENTRATIONS; CONCENTRATIONS FOR RELEASE TO SEWERAGE

			Table 1 Occupational Values[21]			Table 2 Effluent Concentrations		Table 3 Releases to Sewers
			Col. 1 Oral Ingestion	Col. 2 Inhalation	Col. 3 Inhalation	Col. 1	Col. 2	
Atomic No.	Radionuclide	Class	ALI (µCi)	ALI (µCi)	DAC (µCi/ml)	Air (µCi/ml)	Water (µCi/ml)	Monthly Average Concentration (µCi/ml)
53	Iodine-133	D, all compounds	1E+2	3E+2	1E-7	-	-	-
			Thyroid (5E+2)	Thyroid (9E+2)	-	1E-9	7E-6	7E-5
53	Iodine-134[2]	D, all compounds	2E+4	5E+4	2E-5	6E-8	-	-
			Thyroid (3E+4)	-	-	-	4E-4	4E-3
53	Iodine-135	D, all compounds	8E+2	2E+3	7E-7	-	-	-
			Thyroid (3E+3)	Thyroid (4E+3)	-	6E-9	3E-5	3E-4
54	Xenon-120[2]	Submersion[1]	-	-	1E-5	4E-8	-	-
54	Xenon-121[2]	Submersion[1]	-	-	2E-6	1E-8	-	-
54	Xenon-122	Submersion[1]	-	-	7E-5	3E-7	-	-
54	Xenon-123	Submersion[1]	-	-	6E-6	3E-8	-	-
54	Xenon-125	Submersion[1]	-	-	2E-5	7E-8	-	-
54	Xenon-127	Submersion[1]	-	-	1E-5	6E-8	-	-
54	Xenon-129m	Submersion[1]	-	-	2E-4	9E-7	-	-
54	Xenon-131m	Submersion[1]	-	-	4E-4	2E-6	-	-
54	Xenon-133m	Submersion[1]	-	-	1E-4	6E-7	-	-
54	Xenon-133	Submersion[1]	-	-	1E-4	5E-7	-	-
54	Xenon-135m[2]	Submersion[1]	-	-	9E-6	4E-8	-	-
54	Xenon-135	Submersion[1]	-	-	1E-5	7E-8	-	-
54	Xenon-138[2]	Submersion[1]	-	-	4E-6	2E-8	-	-
55	Cesium-125[2]	D, all compounds	5E+4	1E+5	6E-5	2E-7	-	-
			St wall (9E+4)	-	-	-	1E-3	1E-2
55	Cesium-127	D, all compounds	6E+4	9E+4	4E-5	1E-7	9E-4	9E-3
55	Cesium-129	D, all compounds	2E+4	3E+4	1E-5	5E-8	3E-4	3E-3
55	Cesium-130[2]	D, all compounds	6E+4	2E+5	8E-5	3E-7	-	-
			St wall (1E+5)	-	-	-	1E-3	1E-2
55	Cesium-131	D, all compounds	2E+4	3E+4	1E-5	4E-8	3E-4	3E-3
55	Cesium-132	D, all compounds	3E+3	4E+3	2E-6	6E-9	4E-5	4E-4
55	Cesium-134m	D, all compounds	1E+5	1E+5	6E-5	2E-7	-	-
			St wall (1E+5)	-	-	-	2E-3	2E-2
55	Cesium-134	D, all compounds	7E+1	1E+2	4E-8	2E-10	9E-7	9E-6
55	Cesium-135m[2]	D, all compounds	1E+5	2E+5	8E-5	3E-7	1E-3	1E-2
55	Cesium-135	D, all compounds	7E+2	1E+3	5E-7	2E-9	1E-5	1E-4
55	Cesium-136	D, all compounds	4E+2	7E+2	3E-7	9E-10	6E-6	6E-5
55	Cesium-137	D, all compounds	1E+2	2E+2	6E-8	2E-10	1E-6	1E-5

APPENDIX G TO RH-1000 THROUGH RH-2110
ANNUAL LIMITS ON INTAKE (ALIs) AND DERIVED AIR CONCENTRATIONS (DACs) OF RADIONUCLIDES FOR OCCUPATIONAL EXPOSURE; EFFLUENT CONCENTRATIONS; CONCENTRATIONS FOR RELEASE TO SEWERAGE

			Table 1 Occupational Values			Table 2 Effluent Concentrations		Table 3 Releases to Sewers
			Col. 1	Col. 2	Col. 3	Col. 1	Col. 2	
			Oral Ingestion	Inhalation				
Atomic No.	Radionuclide	Class	ALI (μCi)	ALI (μCi)	DAC (μCi/ml)	Air (μCi/ml)	Water (μCi/ml)	Monthly Average Concentration (μCi/ml)
55	Cesium-138[2]	D, all compounds	2E+4	6E+4	2E-5	8E-8	-	-
			St wall (3E+4)	-	-	-	4E-4	4E-3
56	Barium-126[2]	D, all compounds	6E+3	2E+4	6E-6	2E-8	8E-5	8E-4
56	Barium-128	D, all compounds	5E+2	2E+3	7E-7	2E-9	7E-6	7E-5
56	Barium-131m[2]	D, all compounds	4E+5	1E+6	6E-4	2E-6	-	-
			St wall (5E+5)	-	-	-	7E-3	7E-2
56	Barium-131	D, all compounds	3E+3	8E+3	3E-6	1E-8	4E-5	4E-4
56	Barium-133m	D, all compounds	2E+3	9E+3	4E-6	1E-8	-	-
			LLI wall (3E+3)	-	-	-	4E-5	4E-4
56	Barium-133	D, all compounds	2E+3	7E+2	3E-7	9E-10	2E-5	2E-4
56	Barium-135m	D, all compounds	3E+3	1E+4	5E-6	2E-8	4E-5	4E-4
56	Barium-139[2]	D, all compounds	1E+4	3E+4	1E-5	4E-8	2E-4	2E-3
56	Barium-140	D, all compounds	5E+2	1E+3	6E-7	2E-9	-	-
			LLI wall (6E+2)	-	-	-	8E-6	8E-5
56	Barium-141[2]	D, all compounds	2E+4	7E+4	3E-5	1E-7	3E-4	3E-3
56	Barium-142[2]	D, all compounds	5E+4	1E+5	6E-5	2E-7	7E-4	7E-3
57	Lanthanum-131[2]	D, all compounds except those given for W	5E+4	1E+5	5E-5	2E-7	6E-4	6E-3
		W, oxides and hydroxides	-	2E+5	7E-5	2E-7	-	-
57	Lanthanum-132	D, see ^{131}La	3E+3	1E+4	4E-6	1E-8	4E-5	4E-4
		W, see ^{131}La	-	1E+4	5E-6	2E-8	-	-
57	Lanthanum-135	D, see ^{131}La	4E+4	1E+5	4E-5	1E-7	5E-4	5E-3
		W, see ^{131}La	-	9E+4	4E-5	1E-7	-	-
57	Lanthanum-137	D, see ^{131}La	1E+4	6E+1	3E-8	-	2E-4	2E-3
			-	Liver (7E+1)	-	1E-10	-	-
		W, see ^{131}La	-	3E+2	1E-7	-	-	-
			-	Liver (3E+2)	-	4E-10	-	-
57	Lanthanum-138	D, see ^{131}La	9E+2	4E+0	1E-9	5E-12	1E-5	1E-4
		W, see ^{131}La	-	1E+1	6E-9	2E-11	-	-
57	Lanthanum-140	D, see ^{131}La	6E+2	1E+3	6E-7	2E-9	9E-6	9E-5
		W, see ^{131}La	-	1E+3	5E-7	2E-9	-	-
57	Lanthanum-141	D, see ^{131}La	4E+3	9E+3	4E-6	1E-8	5E-5	5E-4
		W, see ^{131}La	-	1E+4	5E-6	2E-8	-	-
57	Lanthanum-142[2]	D, see ^{131}La	8E+3	2E+4	9E-6	3E-8	1E-4	1E-3
		W, see ^{131}La	-	3E+4	1E-5	5E-8	-	-
57	Lanthanum-143[2]	D, see ^{131}La	4E+4	1E+5	4E-5	1E-7	-	-
			St wall (4E+4)	-	-	-	5E-4	5E-3
		W, see ^{131}La	-	9E+4	4E-5	1E-7	-	-

APPENDIX G TO RH-1000 THROUGH RH-2110
ANNUAL LIMITS ON INTAKE (ALIs) AND DERIVED AIR CONCENTRATIONS (DACs) OF RADIONUCLIDES FOR OCCUPATIONAL EXPOSURE; EFFLUENT CONCENTRATIONS; CONCENTRATIONS FOR RELEASE TO SEWERAGE

23

Atomic No.	Radionuclide	Class	Table 1 Occupational Values: Col. 1 Oral Ingestion ALI (µCi)	Col. 2 Inhalation ALI (µCi)	Col. 3 Inhalation DAC (µCi/ml)	Table 2 Effluent Concentrations: Col. 1 Air (µCi/ml)	Col. 2 Water (µCi/ml)	Table 3 Releases t Sewers: Monthly Average Concentrati (µCi/ml)
58	Cerium-134	W, all compounds except those given for Y	5E+2	7E+2	3E-7	1E-9	-	-
			LLI wall (6E+2)	-	-	-	8E-6	8E-5
		Y, oxides, hydroxides, and fluorides	-	7E+2	3E-7	9E-10	-	-
58	Cerium-135	W, see ^{134}Ce	2E+3	4E+3	2E-6	5E-9	2E-5	2E-4
		Y, see ^{134}Ce	-	4E+3	1E-6	5E-9	-	-
58	Cerium-137m	W, see ^{134}Ce	2E+3	4E+3	2E-6	6E-9	-	-
			LLI wall (2E+3)	-	-	-	3E-5	3E-4
		Y, see ^{134}Ce	-	4E+3	2E-6	5E-9	-	-
58	Cerium-137	W, see ^{134}Ce	5E+4	1E+5	6E-5	2E-7	7E-4	7E-3
		Y, see ^{134}Ce	-	1E+5	5E-5	2E-7	-	-
58	Cerium-139	W, see ^{134}Ce	5E+3	8E+2	3E-7	1E-9	7E-5	7E-4
		Y, see ^{134}Ce	-	7E+2	3E-7	9E-10	-	-
58	Cerium-141	W, see ^{134}Ce	2E+3	7E+2	3E-7	1E-9	-	-
			LLI wall (2E+3)	-	-	-	3E-5	3E-4
		Y, see ^{134}Ce	-	6E+2	2E-7	8E-10	-	-
58	Cerium-143	W, see ^{134}Ce	1E+3	2E+3	8E-7	3E-9	-	-
			LLI wall (1E+3)	-	-	-	2E-5	2E-4
		Y, see ^{134}Ce	-	2E+3	7E-7	2E-9	-	-
58	Cerium-144	W, see ^{134}Ce	2E+2	3E+1	1E-8	4E-11	-	-
			LLI wall (3E+2)	-	-	-	3E-6	3E-5
		Y, see ^{134}Ce	-	1E+1	6E-9	2E-11	-	-
59	Praseodymium-136[2]	W, all compounds except those given for Y	5E+4	2E+5	1E-4	3E-7	-	-
			St wall (7E+4)	-	-	-	1E-3	1E-2
		Y, oxides, hydroxides, carbides, and fluorides	-	2E+5	9E-5	3E-7	-	-
59	Praseodymium-137[2]	W, see ^{136}Pr	4E+4	2E+5	6E-5	2E-7	5E-4	5E-3
		Y, see ^{136}Pr	-	1E+5	6E-5	2E-7	-	-
59	Praseodymium-138m	W, see ^{136}Pr	1E+4	5E+4	2E-5	8E-8	1E-4	1E-3
		Y, see ^{136}Pr	-	4E+4	2E-5	6E-8	-	-
59	Praseodymium-139	W, see ^{136}Pr	4E+4	1E+5	5E-5	2E-7	6E-4	6E-3
		Y, see ^{136}Pr	-	1E+5	5E-5	2E-7	-	-
59	Praseodymium-142m[2]	W, see ^{136}Pr	8E+4	2E+5	7E-5	2E-7	1E-3	1E-2
		Y, see ^{136}Pr	-	1E+5	6E-5	2E-7	-	-
59	Praseodymium-142	W, see ^{136}Pr	1E+3	2E+3	9E-7	3E-9	1E-5	1E-4
		Y, see ^{136}Pr	-	2E+3	8E-7	3E-9	-	-
59	Praseodymium-143	W, see ^{136}Pr	9E+2	8E+2	3E-7	1E-9	-	-
			LLI wall (1E+3)	-	-	-	2E-5	2E-4
		Y, see ^{136}Pr	-	7E+2	3E-7	9E-10	-	-

APPENDIX G TO RH-1000 THROUGH RH-2110
ANNUAL LIMITS ON INTAKE (ALIs) AND DERIVED AIR CONCENTRATIONS (DACs) OF RADIONUCLIDES FOR OCCUPATIONAL EXPOSURE; EFFLUENT CONCENTRATIONS; CONCENTRATIONS FOR RELEASE TO SEWERAGE

			Table 1 Occupational Values			Table 2 Effluent Concentrations		Table 3 Releases to Sewers
			Col. 1	Col. 2	Col. 3	Col. 1	Col. 2	
			Oral Ingestion	Inhalation				
Atomic No.	Radionuclide	Class	ALI (μCi)	ALI (μCi)	DAC (μCi/ml)	Air (μCi/ml)	Water (μCi/ml)	Monthly Average Concentration (μCi/ml)
59	Praseodymium-144[2]	W, see ^{130}Pr	3E+4	1E+5	5E-5	2E-7	-	-
			St wall (4E+4)	-	-	-	6E-4	6E-3
		Y, see ^{136}Pr	-	1E+5	5E-5	2E-7	-	-
59	Praseodymium-145	W, see ^{136}Pr	3E+3	9E+3	4E-6	1E-8	4E-5	4E-4
		Y, see ^{136}Pr	-	8E+3	3E-6	1E-8	-	-
59	Praseodymium-147[2]	W, see ^{136}Pr	5E+4	2E+5	8E-5	3E-7	-	-
			St wall (8E+4)	-	-	-	1E-3	1E-2
		Y, see ^{136}Pr	-	2E+5	8E-5	3E-7	-	-
60	Neodymium-136[2]	W, all compounds except those given for Y	1E+4	6E+4	2E-5	8E-8	2E-4	2E-3
		Y, oxides, hydroxides, carbides, and fluorides	-	5E+4	2E-5	8E-8	-	-
60	Neodymium-138	W, see ^{136}Nd	2E+3	6E+3	3E-6	9E-9	3E-5	3E-4
		Y, see ^{136}Nd	-	5E+3	2E-6	7E-9	-	-
60	Neodymium-139m	W, see ^{136}Nd	5E+3	2E+4	7E-6	2E-8	7E-5	7E-4
		Y, see ^{136}Nd	-	1E+4	6E-6	2E-8	-	-
60	Neodymium-139[2]	W, see ^{136}Nd	9E+4	3E+5	1E-4	5E-7	1E-3	1E-2
		Y, see ^{136}Nd	-	3E+5	1E-4	4E-7	-	-
60	Neodymium-141	W, see ^{136}Nd	2E+5	7E+5	3E-4	1E-6	2E-3	2E-2
		Y, see ^{136}Nd	-	6E+5	3E-4	9E-7	-	-
60	Neodymium-147	W, see ^{136}Nd	1E+3	9E+2	4E-7	1E-9	-	-
			LLI wall (1E+3)	-	-	-	2E-5	2E-4
		Y, see ^{136}Nd	-	8E+2	4E-7	1E-9	-	-
60	Neodymium-149[2]	W, see ^{136}Nd	1E+4	3E+4	1E-5	4E-8	1E-4	1E-3
		Y, see ^{136}Nd	-	2E+4	1E-5	3E-8	-	-
60	Neodymium-151[2]	W, see ^{136}Nd	7E+4	2E+5	8E-5	3E-7	9E-4	9E-3
		Y, see ^{136}Nd	-	2E+5	8E-5	3E-7	-	-
61	Promethium-141[2]	W, all compounds except those given for Y	5E+4	2E+5	8E-5	3E-7	-	-
			St wall (6E+4)	-	-	-	8E-4	8E-3
		Y, oxides, hydroxides, carbides, and fluorides	-	2E+5	7E-5	2E-7	-	-
61	Promethium-143	W, see ^{141}Pm	5E+3	6E+2	2E-7	8E-10	7E-5	7E-4
		Y, see ^{141}Pm	-	7E+2	3E-7	1E-9	-	-
61	Promethium-144	W, see ^{141}Pm	1E+3	1E+2	5E-8	2E-10	2E-5	2E-4
		Y, see ^{141}Pm	-	1E+2	5E-8	2E-10	-	-
61	Promethium-145	W, see ^{141}Pm	1E+4	2E+2	7E-8	-	1E-4	1E-3
			-	Bone surf (2E+2)	-	3E-10	-	-
		Y, see ^{141}Pm	-	2E+2	8E-8	3E-10	-	-
61	Promethium-146	W, see ^{141}Pm	2E+3	5E+1	2E-8	7E-11	2E-5	2E-4
		Y, see ^{141}Pm	-	4E+1	2E-8	6E-11	-	-
61	Promethium-147	W, see ^{141}Pm	4E+3	1E+2	5E-8	-	-	-
			LLI wall (5E+3)	Bone surf (2E+2)	-	3E-10	7E-5	7E-4
		Y, see ^{141}Pm	-	1E+2	6E-8	2E-10	-	-

APPENDIX G TO RH-1000 THROUGH RH-2110
ANNUAL LIMITS ON INTAKE (ALIs) AND DERIVED AIR CONCENTRATIONS (DACs) OF RADIONUCLIDES FOR OCCUPATIONAL EXPOSURE; EFFLUENT CONCENTRATIONS; CONCENTRATIONS FOR RELEASE TO SEWERAGE

			Table 1 Occupational Values			Table 2 Effluent Concentrations		Table 3 Releases to Sewers
			Col. 1	Col. 2	Col. 3	Col. 1	Col. 2	
			Oral Ingestion	Inhalation				
Atomic No.	Radionuclide	Class	ALI (µCi)	ALI (µCi)	DAC (µCi/ml)	Air (µCi/ml)	Water (µCi/ml)	Monthly Average Concentration (µCi/ml)
61	Promethium-148m	W, see ^{141}Pm	7E+2	3E+2	1E-7	4E-10	1E-5	1E-4
		Y, see ^{141}Pm	-	3E+2	1E-7	5E-10	-	-
61	Promethium-148	W, see ^{141}Pm	4E+2	5E+2	2E-7	8E-10	-	-
			LLI wall (5E+2)	-	-	-	7E-6	7E-5
		Y, see ^{141}Pm	-	5E+2	2E-7	7E-10	-	-
61	Promethium-149	W, see ^{141}Pm	1E+3	2E+3	8E-7	3E-9	-	-
			LLI wall (1E+3)	-	-	-	2E-5	2E-4
		Y, see ^{141}Pm	-	2E+3	8E-7	2E-9	-	-
61	Promethium-150	W, see ^{141}Pm	5E+3	2E+4	8E-6	3E-8	7E-5	7E-4
		Y, see ^{141}Pm	-	2E+4	7E-6	2E-8	-	-
61	Promethium-151	W, see ^{141}Pm	2E+3	4E+3	1E-6	5E-9	2E-5	2E-4
		Y, see ^{141}Pm	-	3E+3	1E-6	4E-9	-	-
62	Samarium-141m[2]	W, all compounds	3E+4	1E+5	4E-5	1E-7	4E-4	4E-3
62	Samarium-141[2]	W, all compounds	5E+4	2E+5	8E-5	2E-7	-	-
			St wall (6E+4)	-	-	-	8E-4	8E-3
62	Samarium-142[2]	W, all compounds	8E+3	3E+4	1E-5	4E-8	1E-4	1E-3
62	Samarium-145	W, all compounds	6E+3	5E+2	2E-7	7E-10	8E-5	8E-4
62	Samarium-146	W, all compounds	1E+1	4E2	1E-11	-	-	-
			Bone surf (3E+1)	Bone surf (6E-2)	-	9E-14	3E-7	3E-6
62	Samarium-147	W, all compounds	2E+1	4E2	2E-11	-	-	-
			Bone surf (3E+1)	Bone surf (7E-2)	-	1E-13	4E-7	4E-6
62	Samarium-151	W, all compounds	1E+4	1E+2	4E-8	-	-	-
			LLI wall (1E+4)	Bone surf (2E+2)	-	2E-10	2E-4	2E-3
62	Samarium-153	W, all compounds	2E+3	3E+3	1E-6	4E-9	-	-
			LLI wall (2E+3)	-	-	-	3E-5	3E-4
62	Samarium-155[2]	W, all compounds	6E+4	2E+5	9E-5	3E-7	-	-
			St wall (8E+4)	-	-	-	1E-3	1E-2
62	Samarium-156	W, all compounds	5E+3	9E+3	4E-6	1E-8	7E-5	7E-4
63	Europium-145	W, all compounds	2E+3	2E+3	8E-7	3E-9	2E-5	2E-4
63	Europium-146	W, all compounds	1E+3	1E+3	5E-7	2E-9	1E-5	1E-4
63	Europium-147	W, all compounds	3E+3	2E+3	7E-7	2E-9	4E-5	4E-4
63	Europium-148	W, all compounds	1E+3	4E+2	1E-7	5E-10	1E-5	1E-4
63	Europium-149	W, all compounds	1E+4	3E+3	1E-6	4E-9	2E-4	2E-3
63	Europium-150 (12.62 h)	W, all compounds	3E+3	8E+3	4E-6	1E-8	4E-5	4E-4
63	Europium-150 (34.2 y)	W, all compounds	8E+2	2E+1	8E-9	3E-11	1E-5	1E-4

APPENDIX G TO RH-1000 THROUGH RH-2110
ANNUAL LIMITS ON INTAKE (ALIs) AND DERIVED AIR CONCENTRATIONS (DACs) OF RADIONUCLIDES FOR OCCUPATIONAL EXPOSURE; EFFLUENT CONCENTRATIONS; CONCENTRATIONS FOR RELEASE TO SEWERAGE

			Table 1 Occupational Values			Table 2 Effluent Concentrations		Table 3 Releases to Sewers
			Col. 1	Col. 2	Col. 3	Col. 1	Col. 2	
			Oral Ingestion	Inhalation				
Atomic No.	Radionuclide	Class	ALI (µCi)	ALI (µCi)	DAC (µCi/ml)	Air (µCi/ml)	Water (µCi/ml)	Monthly Average Concentration (µCi/ml)
63	Europium-152m	W, all compounds	3E+3	6E+3	3E-6	9E-9	4E-5	4E-4
63	Europium-152	W, all compounds	8E+2	2E+1	1E-8	3E-11	1E-5	1E-4
63	Europium-154	W, all compounds	5E+2	2E+1	8E-9	3E-11	7E-6	7E-5
63	Europium-155	W, all compounds	4E+3	9E+1	4E-8	-	5E-5	5E-4
			-	Bone surf (1E+2)	-	2E-10	-	-
63	Europium-156	W, all compounds	6E+2	5E+2	2E-7	6E-10	8E-6	8E-5
63	Europium-157	W, all compounds	2E+3	5E+3	2E-6	7E-9	3E-5	3E-4
63	Europium-158[2]	W, all compounds	2E+4	6E+4	2E-5	8E-8	3E-4	3E-3
64	Gadolinium-145[2]	D, all compounds except those given for W	5E+4	2E+5	6E-5	2E-7	-	-
			St wall (5E+4)	-	-	-	6E-4	6E-3
		W, oxides, hydroxides, and fluorides	-	2E+5	7E-5	2E-7	-	-
64	Gadolinium-146	D, see ^{145}Gd	1E+3	1E+2	5E-8	2E-10	2E-5	2E-4
		W, see ^{145}Gd	-	3E+2	1E-7	4E-10	-	-
64	Gadolinium-147	D, see ^{145}Gd	2E+3	4E+3	2E-6	6E-9	3E-5	3E-4
		W, see ^{145}Gd	-	4E+3	1E-6	5E-9	-	-
64	Gadolinium-148	D, see ^{145}Gd	1E+1	8E+3	3E-12	-	-	-
			Bone surf (2E+1)	Bone surf (2E+2)	-	2E-14	3E-7	3E-6
		W, see ^{145}Gd	-	3E-2	1E-11	-	-	-
			-	Bone surf (6E-2)	-	8E-14	-	-
64	Gadolinium-149	D, see ^{145}Gd	3E+3	2E+3	9E-7	3E-9	4E-5	4E-4
		W, see ^{145}Gd	-	2E+3	1E-6	3E-9	-	-
64	Gadolinium-151	D, see ^{145}Gd	6E+3	4E+2	2E-7	-	9E-5	9E-4
			-	Bone surf (6E+2)	-	9E-10	-	-
		W, see ^{145}Gd	-	1E+3	5E-7	2E-9	-	-
64	Gadolinium-152	D, see ^{145}Gd	2E+1	1E-2	4E-12	-	-	-
			Bone surf (3E+1)	Bone surf (2E-2)	-	3E-14	4E-7	4E-6
		W, see ^{145}Gd	-	4E-2	2E-11	-	-	-
			-	Bone surf (8E-2)	-	1E-13	-	-
64	Gadolinium-153	D, see ^{145}Gd	5E+3	1E+2	6E-8	-	6E-5	6E-4
			-	Bone surf (2E+2)	-	3E-10	-	-
		W, see ^{145}Gd	-	6E+2	2E-7	8E-10	-	-
64	Gadolinium-159	D, see ^{145}Gd	3E+3	8E+3	3E-6	1E-8	4E-5	4E-4
		W, see ^{145}Gd	-	6E+3	2E-6	8E-9	-	-
65	Terbium-147[2]	W, all compounds	9E+3	3E+4	1E-5	5E-8	1E-4	1E-3
65	Terbium-149	W, all compounds	5E+3	7E+2	3E-7	1E-9	7E-5	7E-4
65	Terbium-150	W, all compounds	5E+3	2E+4	9E-6	3E-8	7E-5	7E-4
65	Terbium-151	W, all compounds	4E+3	9E+3	4E-6	1E-8	5E-5	5E-4

APPENDIX G TO RH-1000 THROUGH RH-2110
ANNUAL LIMITS ON INTAKE (ALIs) AND DERIVED AIR CONCENTRATIONS (DACs) OF RADIONUCLIDES FOR OCCUPATIONAL EXPOSURE; EFFLUENT CONCENTRATIONS; CONCENTRATIONS FOR RELEASE TO SEWERAGE

			Table 1 Occupational Values			Table 2 Effluent Concentrations		Table 3 Releases to Sewers
			Col. 1	Col. 2	Col. 3	Col. 1	Col. 2	
			Oral Ingestion	Inhalation				
Atomic No.	Radionuclide	Class	ALI (µCi)	ALI (µCi)	DAC (µCi/ml)	Air (µCi/ml)	Water (µCi/ml)	Monthly Average Concentration (µCi/ml)
65	Terbium-153	W, all compounds	5E+3	7E+3	3E-6	1E-8	7E-5	7E-4
65	Terbium-154	W, all compounds	2E+3	4E+3	2E-6	6E-9	2E-5	2E-4
65	Terbium-155	W, all compounds	6E+3	8E+3	3E-6	1E-8	8E-5	8E-4
65	Terbium-156m (5.0 h)	W, all compounds	2E+4	3E+4	1E-5	4E-8	2E-4	2E-3
65	Terbium-156m (24.4 h)	W, all compounds	7E+3	8E+3	3E-6	1E-8	1E-4	1E-3
65	Terbium-156	W, all compounds	1E+3	1E+3	6E-7	2E-9	1E-5	1E-4
65	Terbium-157	W, all compounds	5E+4	3E+2	1E-7	-	-	-
			LLI wall (5E+4)	Bone surf (6E+2)	-	8E-10	7E-4	7E-3
65	Terbium-158	W, all compounds	1E+3	2E+1	8E-9	3E-11	2E-5	2E-4
65	Terbium-160	W, all compounds	8E+2	2E+2	9E-8	3E-10	1E-5	1E-4
65	Terbium-161	W, all compounds	2E+3	2E+3	7E-7	2E-9	-	-
			LLI wall (2E+3)	-	-	-	3E-5	3E-4
66	Dysprosium-155	W, all compounds	9E+3	3E+4	1E-5	4E-8	1E-4	1E-3
66	Dysprosium-157	W, all compounds	2E+4	6E+4	3E-5	9E-8	3E-4	3E-3
66	Dysprosium-159	W, all compounds	1E+4	2E+3	1E-6	3E-9	2E-4	2E-3
66	Dysprosium-165	W, all compounds	1E+4	5E+4	2E-5	6E-8	2E-4	2E-3
66	Dysprosium-166	W, all compounds	6E+2	7E+2	3E-7	1E-9	-	-
			LLI wall (8E+2)	-	-	-	1E-5	1E-4
67	Holmium-155[2]	W, all compounds	4E+4	2E+5	6E-5	2E-7	6E-4	6E-3
67	Holmium-157[2]	W, all compounds	3E+5	1E+6	6E-4	2E-6	4E-3	4E-2
67	Holmium-159[2]	W, all compounds	2E+5	1E+6	4E-4	1E-6	3E-3	3E-2
67	Holmium-161	W, all compounds	1E+5	4E+5	2E-4	6E-7	1E-3	1E-2
67	Holmium-162m[2]	W, all compounds	5E+4	3E+5	1E-4	4E-7	7E-4	7E-3
67	Holmium-162[2]	W, all compounds	5E+5	2E+6	1E-3	3E-6	-	-
			St wall (8E+5)	-	-	-	1E-2	1E-1
67	Holmium-164m[2]	W, all compounds	1E+5	3E+5	1E-4	4E-7	1E-3	1E-2
67	Holmium-164[2]	W, all compounds	2E+5	6E+5	3E-4	9E-7	-	-
			St wall (2E+5)	-	-	-	3E-3	3E-2
67	Holmium-166m	W, all compounds	6E+2	7E+0	3E-9	9E-12	9E-6	9E-5
67	Holmium-166	W, all compounds	9E+2	2E+3	7E-7	2E-9	-	-
			LLI wall (9E+2)	-	-	-	1E-5	1E-4
67	Holmium-167	W, all compounds	2E+4	6E+4	2E-5	8E-8	2E-4	2E-3
68	Erbium-161	W, all compounds	2E+4	6E+4	3E-5	9E-8	2E-4	2E-3

APPENDIX G TO RH-1000 THROUGH RH-2110
ANNUAL LIMITS ON INTAKE (ALIs) AND DERIVED AIR CONCENTRATIONS (DACs) OF RADIONUCLIDES FOR OCCUPATIONAL EXPOSURE; EFFLUENT CONCENTRATIONS; CONCENTRATIONS FOR RELEASE TO SEWERAGE

			28					
			Table 1 Occupational Values			Table 2 Effluent Concentrations		Table 3 Releases to Sewers
			Col. 1	Col. 2	Col. 3	Col. 1	Col. 2	
			Oral Ingestion	Inhalation				
Atomic No.	Radionuclide	Class	ALI (μCi)	ALI (μCi)	DAC (μCi/ml)	Air (μCi/ml)	Water (μCi/ml)	Monthly Average Concentration (μCi/ml)
68	Erbium-165	W, all compounds	6E+4	2E+5	8E-5	3E-7	9E-4	9E-3
68	Erbium-169	W, all compounds	3E+3	3E+3	1E-6	4E-9	-	-
			LLI wall (4E+3)	-	-	-	5E-5	5E-4
68	Erbium-171	W, all compounds	4E+3	1E+4	4E-6	1E-8	5E-5	5E-4
68	Erbium-172	W, all compounds	1E+3	1E+3	6E-7	2E-9	-	-
			LLI wall (E+3)	-	-	-	2E-5	2E-4
69	Thulium-162[2]	W, all compounds	7E+4	3E+5	1E-4	4E-7	-	-
			St wall (7E+4)	-	-	-	1E-3	1E-2
69	Thulium-166	W, all compounds	4E+3	1E+4	6E-6	2E-8	6E-5	6E-4
69	Thulium-167	W, all compounds	2E+3	2E+3	8E-7	3E-9	-	-
			LLI wall (2E+3)	-	-	-	3E-5	3E-4
69	Thulium-170	W, all compounds	8E+2	2E+2	9E-8	3E-10	-	-
			LLI wall (1E+3)	-	-	-	1E-5	1E-4
69	Thulium-171	W, all compounds	1E+4	3E+2	1E-7	-	-	-
			LLI wall (1E+4)	Bone surf (6E+2)	-	8E-10	2E-4	2E-3
69	Thulium-172	W, all compounds	7E+2	1E+3	5E-7	2E-9	-	-
			LLI wall (8E+2)	-	-	-	1E-5	1E-4
69	Thulium-173	W, all compounds	4E+3	1E+4	5E-6	2E-8	6E-5	6E-4
69	Thulium-175[2]	W, all compounds	7E+4	3E+5	1E-4	4E-7	-	-
			St wall (9E+4)	-	-	-	1E-3	1E-2
70	Ytterbium-162[2]	W, all compounds except those given for Y	7E+4	3E+5	1E-4	4E-7	1E-3	1E-2
		Y, oxides, hydroxides, and fluorides	-	3E+5	1E-4	4E-7	-	-
70	Ytterbium-166	W, see ^{162}Yb	1E+3	2E+3	8E-7	3E-9	2E-5	2E-4
		Y, see ^{162}Yb	-	2E+3	8E-7	3E-9	-	-
70	Ytterbium-167[2]	W, see ^{162}Yb	3E+5	8E+5	3E-4	1E-6	4E-3	4E-2
		Y, see ^{162}Yb	-	7E+5	3E-4	1E-6	-	-
70	Ytterbium-169	W, see ^{162}Yb	2E+3	8E+2	4E-7	1E-9	2E-5	2E-4
		Y, see ^{162}Yb	-	7E+2	3E-7	1E-9	-	-
70	Ytterbium-175	W, see ^{162}Yb	3E+3	4E+3	1E-6	5E-9	-	-
			LLI wall (3E+3)	-	-	-	4E-5	4E-4
		Y, see ^{162}Yb	-	3E+3	1E-6	5E-9	-	-
70	Ytterbium-177[2]	W, see ^{162}Yb	2E+4	5E+4	2E-5	7E-8	2E-4	2E-3
		Y, see ^{162}Yb	-	5E+4	2E-5	6E-8	-	-
70	Ytterbium-178[2]	W, see ^{162}Yb	1E+4	4E+4	2E-5	6E-8	2E-4	2E-3
		Y, see ^{162}Yb	-	4E+4	2E-5	5E-8	-	-

APPENDIX G TO RH-1000 THROUGH RH-2110
ANNUAL LIMITS ON INTAKE (ALIs) AND DERIVED AIR CONCENTRATIONS (DACs) OF RADIONUCLIDES FOR OCCUPATIONAL EXPOSURE; EFFLUENT CONCENTRATIONS; CONCENTRATIONS FOR RELEASE TO SEWERAGE

			Table 1 Occupational Values			Table 2 Effluent Concentrations		Table 3 Releases to Sewers
			Col. 1	Col. 2	Col. 3	Col. 1	Col. 2	
			Oral Ingestion	Inhalation				
Atomic No.	Radionuclide	Class	ALI (µCi)	ALI (µCi)	DAC (µCi/ml)	Air (µCi/ml)	Water (µCi/ml)	Monthly Average Concentration (µCi/ml)
71	Lutetium-169	W, all compounds except those given for Y	3E+3	4E+3	2E-6	6E-9	3E-5	3E-4
		Y, oxides, hydroxides, and fluorides	-	4E+3	2E-6	6E-9	-	-
71	Lutetium-170	W, see ^{169}Lu	1E+3	2E+3	9E-7	3E-9	2E-5	2E-4
		Y, see ^{169}Lu	-	2E+3	8E-7	3E-9	-	-
71	Lutetium-171	W, see ^{169}Lu	2E+3	2E+3	8E-7	3E-9	3E-5	3E-4
		Y, see ^{169}Lu	-	2E+3	8E-7	3E-9	-	-
71	Lutetium-172	W, see ^{169}Lu	1E+3	1E+3	5E-7	2E-9	1E-5	1E-4
		Y, see ^{169}Lu	-	1E+3	5E-7	2E-9	-	-
71	Lutetium-173	W, see ^{169}Lu	5E+3	3E+2	1E-7	-	7E-5	7E-4
			-	Bone surf (5E+2)	-	6E-10	-	-
		Y, see ^{169}Lu	-	3E+2	1E-7	4E-10	-	-
71	Lutetium-174m	W, see ^{169}Lu	2E+3	2E+2	1E-7	-	-	-
			LLI wall (3E+3)	Bone surf (3E+2)	-	5E-10	4E-5	4E-4
		Y, see ^{169}Lu	-	2E+2	9E-8	3E-10	-	-
71	Lutetium-174	W, see ^{169}Lu	5E+3	1E+2	5E-8	-	7E-5	7E-4
			-	Bone surf (2E+2)	-	3E-10	-	-
		Y, see ^{169}Lu	-	2E+2	6E-8	2E-10	-	-
71	Lutetium-176m	W, see ^{169}Lu	8E+3	3E+4	1E-5	3E-8	1E-4	1E-3
		Y, see ^{169}Lu	-	2E+4	9E-6	3E-8	-	-
71	Lutetium-176	W, see ^{169}Lu	7E+2	5E+0	2E-9	-	1E-5	1E-4
			-	Bone surf (1E+1)	-	2E-11	-	-
		Y, see ^{169}Lu	-	8E+0	3E-9	1E-11	-	-
71	Lutetium-177m	W, see ^{169}Lu	7E+2	1E+2	5E-8	-	1E-5	1E-4
			-	Bone surf (1E+2)	-	2E-10	-	-
		Y, see ^{169}Lu	-	8E+1	3E-8	1E-10	-	-
71	Lutetium-177	W, see ^{169}Lu	2E+3	2E+3	9E-7	3E-9	-	-
			LLI wall (3E+3)	-	-	-	4E-5	4E-4
		Y, see ^{169}Lu	-	2E+3	9E-7	3E-9	-	-
71	Lutetium-178m[2]	W, see ^{169}Lu	5E+4	2E+5	8E-5	3E-7	-	-
			St. wall (6E+4)	-	-	-	8E-4	8E-3
		Y, see ^{169}Lu	-	2E+5	7E-5	2E-7	-	-
71	Lutetium-178[2]	W, see ^{169}Lu	4E+4	1E+5	5E-5	2E-7	-	-
			St wall (4E+4)	-	-	-	6E-4	6E-3
		Y, see ^{169}Lu	-	1E+5	5E-5	2E-7	-	-
71	Lutetium-179	W, see ^{169}Lu	6E+3	2E+4	8E-6	3E-8	9E-5	9E-4
		Y, see ^{169}Lu	-	2E+4	6E-6	3E-8	-	-
72	Hafnium-170	D, all compounds except those given for W	3E+3	6E+3	2E-6	8E-9	4E-5	4E-4
		W, oxides, hydroxides, carbides, and nitrates	-	5E+3	2E-6	6E-9	-	-

APPENDIX G TO RH-1000 THROUGH RH-2110
ANNUAL LIMITS ON INTAKE (ALIs) AND DERIVED AIR CONCENTRATIONS (DACs) OF RADIONUCLIDES FOR OCCUPATIONAL EXPOSURE; EFFLUENT CONCENTRATIONS; CONCENTRATIONS FOR RELEASE TO SEWERAGE

			Table 1 Occupational Values			Table 2 Effluent Concentrations		Table 3 Releases to Sewers
			Col. 1	Col. 2	Col. 3	Col. 1	Col. 2	
			Oral Ingestion	Inhalation				Monthly Average
Atomic No.	Radionuclide	Class	ALI (μCi)	ALI (μCi)	DAC (μCi/ml)	Air (μCi/ml)	Water (μCi/ml)	Concentration (μCi/ml)
72	Hafnium-172	D, see ^{170}Hf	1E+3	9E+0	4E-9	-	2E-5	2E-4
			-	Bone surf (2E+1)	-	3E-11	-	-
		W, see ^{170}Hf	-	4E+1	2E-8	-	-	-
			-	Bone surf (6E+1)	-	8E-11	-	-
72	Hafnium-173	D, see ^{170}Hf	5E+3	1E+4	5E-6	2E-8	7E-5	7E-4
		W, see ^{170}Hf	-	1E+4	5E-6	2E-8	-	-
72	Hafnium-175	D, see ^{170}Hf	3E+3	9E+2	4E-7	-	4E-5	4E-4
			-	Bone surf (1E+3)	-	1E-9	-	-
		W, see ^{170}Hf	-	1E+3	5E-7	2E-9	-	-
72	Hafnium-177m[2]	D, see ^{170}Hf	2E+4	6E+4	2E-5	8E-8	3E-4	3E-3
		W, see ^{170}Hf	-	9E+4	4E-5	1E-7	-	-
72	Hafnium-178m	D, see ^{170}Hf	3E+2	1E+0	5E-10	-	3E-6	3E-5
			-	Bone surf (2E+0)	-	3E-12	-	-
		W, see ^{170}Hf	-	5E+0	2E-9	-	-	-
			-	Bone surf (9E+0)	-	1E-11	-	-
72	Hafnium-179m	D, see ^{170}Hf	1E+3	3E+2	1E-7	-	1E-5	1E-4
			-	Bone surf (6E+2)	-	8E-10	-	-
		W, see ^{170}Hf	-	6E+2	3E-7	8E-10	-	-
72	Hafnium-180m	D, see ^{170}Hf	7E+3	2E+4	9E-6	3E-8	1E-4	1E-3
		W, see ^{170}Hf	-	3E+4	1E-5	4E-8	-	-
72	Hafnium-181	D, see ^{170}Hf	1E+3	2E+2	7E-8	-	2E-5	2E-4
			-	Bone surf (4E+2)	-	6E-10	-	-
		W, see ^{170}Hf	-	4E+2	2E-7	6E-10	-	-
72	Hafnium-182m[2]	D, see ^{170}Hf	4E+4	9E+4	4E-5	1E-7	5E-4	5E-3
		W, see ^{170}Hf	-	1E+5	6E-5	2E-7	-	-
72	Hafnium-182	D, see ^{170}Hf	2E+2	8E-1	3E-10	-	-	-
			Bone surf (4E+2)	Bone surf (2E+0)	-	2E-12	5E-6	5E-5
		W, see ^{170}Hf	-	3E+0	1E-9	-	-	-
			-	Bone surf (7E+0)	-	1E-11	-	-
72	Hafnium-183[2]	D, see ^{170}Hf	2E+4	5E+4	2E-5	6E-8	3E-4	3E-3
		W, see ^{170}Hf	-	6E+4	2E-5	8E-8	-	-
72	Hafnium-184	D, see ^{170}Hf	2E+3	8E+3	3E-6	1E-8	3E-5	3E-4
		W, see ^{170}Hf	-	6E+3	3E-6	9E-9	-	-
73	Tantalum-172[2]	W, all compounds except those given for Y	4E+4	1E+5	5E-5	2E-7	5E-4	5E-3
		Y, elemental Ta, oxides, hydroxides, halides, carbides, nitrates, and nitrides	-	1E+5	4E-5	1E-7	-	-
73	Tantalum-173	W, see ^{172}Ta	7E+3	2E+4	8E-6	3E-8	9E-5	9E-4
		Y, see ^{172}Ta	-	2E+4	7E-6	2E-8	-	-
73	Tantalum-174[2]	W, see ^{172}Ta	3E+4	1E+5	4E-5	1E-7	4E-4	4E-3
		Y, see ^{172}Ta	-	9E+4	4E-5	1E-7	-	-

APPENDIX G TO RH-1000 THROUGH RH-2110
ANNUAL LIMITS ON INTAKE (ALIs) AND DERIVED AIR CONCENTRATIONS (DACs) OF RADIONUCLIDES FOR OCCUPATIONAL EXPOSURE; EFFLUENT CONCENTRATIONS; CONCENTRATIONS FOR RELEASE TO SEWERAGE

			Table 1 Occupational Values			Table 2 Effluent Concentrations		Table 3 Releases to Sewers
			Col. 1 Oral Ingestion	Col. 2 Inhalation	Col. 3 Inhalation	Col. 1	Col. 2	
Atomic No.	Radionuclide	Class	ALI (μCi)	ALI (μCi)	DAC (μCi/ml)	Air (μCi/ml)	Water (μCi/ml)	Monthly Average Concentration (μCi/ml)
73	Tantalum-175	W, see ^{172}Ta	6E+3	2E+4	7E-6	2E-8	8E-5	8E-4
		Y, see ^{172}Ta	-	1E+4	6E-6	2E-8	-	-
73	Tantalum-176	W, see ^{172}Ta	4E+3	1E+4	5E-6	2E-8	5E-5	5E-4
		Y, see ^{172}Ta	-	1E+4	5E-6	2E-8	-	-
73	Tantalum-177	W, see ^{172}Ta	1E+4	2E+4	8E-6	3E-8	2E-4	2E-3
		Y, see ^{172}Ta	-	2E+4	7E-6	2E-8	-	-
73	Tantalum-178	W, see ^{172}Ta	2E+4	9E+4	4E-5	1E-7	2E-4	2E-3
		Y, see ^{172}Ta	-	7E+4	3E-5	1E-7	-	-
73	Tantalum-179	W, see ^{172}Ta	2E+4	5E+3	2E-6	8E-9	3E-4	3E-3
		Y, see ^{172}Ta	-	9E+2	4E-7	1E-9	-	-
73	Tantalum-180m	W, see ^{172}Ta	2E+4	7E+4	3E-5	9E-8	3E-4	3E-3
		Y, see ^{172}Ta	-	6E+4	2E-5	8E-8	-	-
73	Tantalum-180	W, see ^{172}Ta	1E+3	4E+2	2E-7	6E-10	2E-5	2E-4
		Y, see ^{172}Ta	-	2E+1	1E-8	3E-11	-	-
73	Tantalum-182m[2]	W, see ^{172}Ta	2E+5	5E+5	2E-4	8E-7	-	-
			St wall (2E+5)	-	-	-	3E-3	3E-2
		Y, see ^{172}Ta	-	4E+5	2E-4	6E-7	-	-
73	Tantalum-182	W, see ^{172}Ta	8E+2	3E+2	1E-7	5E-10	1E-5	1E-4
		Y, see ^{172}Ta	-	1E+2	6E-8	2E-10	-	-
73	Tantalum-183	W, see ^{172}Ta	9E+2	1E+3	5E-7	2E-9	-	-
			LLI wall (1E+3)	-	-	-	2E-5	2E-4
		Y, see ^{172}Ta	-	1E+3	4E-7	1E-9	-	-
73	Tantalum-184	W, see ^{172}Ta	2E+3	5E+3	2E-6	8E-9	3E-5	3E-4
		Y, see ^{172}Ta	-	5E+3	2E-6	7E-9	-	-
73	Tantalum-185[2]	W, see ^{172}Ta	3E+4	7E+4	3E-5	1E-7	4E-4	4E-3
		Y, see ^{172}Ta	-	6E+4	3E-5	9E-8	-	-
73	Tantalum-186[2]	W, see ^{172}Ta	5E+4	2E+5	1E-4	3E-7	-	-
			St wall (7E+4)	-	-	-	1E-3	1E-2
		Y, see ^{172}Ta	-	2E+5	9E-5	3E-7	-	-
74	Tungsten-176	D, all compounds	1E+4	5E+4	2E-5	7E-8	1E-4	1E-3
74	Tungsten-177	D, all compounds	2E+4	9E+4	4E-5	1E-7	3E-4	3E-3
74	Tungsten-178	D, all compounds	5E+3	2E+4	8E-6	3E-8	7E-5	7E-4
74	Tungsten-179[2]	D, all compounds	5E+5	2E+6	7E-4	2E-6	7E-3	7E-2
74	Tungsten-181	D, all compounds	2E+4	3E+4	1E-5	5E-8	2E-4	2E-3
74	Tungsten-185	D, all compounds	2E+3	7E+3	3E-6	9E-9	-	-
			LLI wall (3E+3)	-	-	-	4E-5	4E-4
74	Tungsten-187	D, all compounds	2E+3	9E+3	4E-6	1E-8	3E-5	3E-4
74	Tungsten-188	D, all compounds	4E+2	1E+3	5E-7	2E-9	-	-
			LLI wall (5E+2)	-	-	-	7E-6	7E-5

APPENDIX G TO RH-1000 THROUGH RH-2110
ANNUAL LIMITS ON INTAKE (ALIs) AND DERIVED AIR CONCENTRATIONS (DACs) OF RADIONUCLIDES FOR OCCUPATIONAL EXPOSURE; EFFLUENT CONCENTRATIONS; CONCENTRATIONS FOR RELEASE TO SEWERAGE

			Table 1 Occupational Values			Table 2 Effluent Concentrations		Table 3 Releases to Sewers
			Col. 1	Col. 2	Col. 3	Col. 1	Col. 2	
			Oral Ingestion	Inhalation				
Atomic No.	Radionuclide	Class	ALI (μCi)	ALI (μCi)	DAC (μCi/ml)	Air (μCi/ml)	Water (μCi/ml)	Monthly Average Concentration (μCi/ml)
75	Rhenium-177[2]	D, all compounds except those given for W	9E+4	3E+5	1E-4	4E-7	-	-
			St wall (1E+5)	-	-	-	2E-3	2E-2
		W, oxides, hydroxides, and nitrates	-	4E+5	1E-4	5E-7	-	-
75	Rhenium-178[2]	D, see ^{177}Re	7E+4	3E+5	1E-4	4E-7	-	-
			St wall (1E+5)	-	-	-	1E-3	1E-2
		W, see ^{177}Re	-	3E+5	1E-4	4E-7	-	-
75	Rhenium-181	D, see ^{177}Re	5E+3	9E+3	4E-6	1E-8	7E-5	7E-4
		W, see ^{177}Re	-	9E+3	4E-6	1E-8	-	-
75	Rhenium-182 (12.7 h)	D, see ^{177}Re	7E+3	1E+4	5E-6	2E-8	9E-5	9E-4
		W, see ^{177}Re	-	2E+4	6E-6	2E-8	-	-
75	Rhenium-182 (64.0 h)	D, see ^{177}Re	1E+3	2E+3	1E-6	3E-9	2E-5	2E-4
		W, see ^{177}Re	-	2E+3	9E-7	3E-9	-	-
75	Rhenium-184m	D, see ^{177}Re	2E+3	3E+3	1E-6	4E-9	3E-5	3E-4
		W, see ^{177}Re	-	4E+2	2E-7	6E-10	-	-
75	Rhenium-184	D, see ^{177}Re	2E+3	4E+3	1E-6	5E-9	3E-5	3E-4
		W, see ^{177}Re	-	1E+3	6E-7	2E-9	-	-
75	Rhenium-186m	D, see ^{177}Re	1E+3	2E+3	7E-7	-	-	-
			St wall (2E+3)	St wall (2E+3)	-	3E-9	2E-5	2E-4
		W, see ^{177}Re	-	2E+2	6E-8	2E-10	-	-
75	Rhenium-186	D, see ^{177}Re	2E+3	3E+3	1E-6	4E-9	3E-5	3E-4
		W, see ^{177}Re	-	2E+3	7E-7	2E-9	-	-
75	Rhenium-187	D, see ^{177}Re	6E+5	8E+5	4E-4	-	8E-3	8E-2
			St wall -	(9E+5)	-	1E-6	-	-
		W, see ^{177}Re	-	1E+5	4E-5	1E-7	-	-
75	Rhenium-188m[2]	D, see ^{177}Re	8E+4	1E+5	6E-5	2E-7	1E-3	1E-2
		W, see ^{177}Re	-	1E+5	6E-5	2E-7	-	-
75	Rhenium-188	D, see ^{177}Re	2E+3	3E+3	1E-6	4E-9	2E-5	2E-4
		W, see ^{177}Re	-	3E+3	1E-6	4E-9	-	-
75	Rhenium-189	D, see ^{177}Re	3E+3	5E+3	2E-6	7E-9	4E-5	4E-4
		W, see ^{177}Re	-	4E+3	2E-6	6E-9	-	-
76	Osmium-180[2]	D, all compounds except those given for W and Y	1E+5	4E+5	2E-4	5E-7	1E-3	1E-2
		W, halides and nitrates	-	5E+5	2E-4	7E-7	-	-
		Y, oxides and hydroxides	-	5E+5	2E-4	6E-7	-	-
76	Osmium-181[2]	D, see ^{180}Os	1E+4	4E+4	2E-5	6E-8	2E-4	2E-3
		W, see ^{180}Os	-	5E+4	2E-5	6E-8	-	-
		Y, see ^{180}Os	-	4E+4	2E-5	6E-8	-	-
76	Osmium-182	D, see ^{180}Os	2E+3	6E+3	2E-6	8E-9	3E-5	3E-4
		W, see ^{180}Os	-	4E+3	2E-6	6E-9	-	-
		Y, see ^{180}Os	-	4E+3	2E-6	6E-9	-	-
76	Osmium-185	D, see ^{180}Os	2E+3	5E+2	2E-7	7E-10	3E-5	3E-4
		W, see ^{180}Os	-	8E+2	3E-7	1E-9	-	-
		Y, see ^{180}Os	-	8E+2	3E-7	1E-9	-	-

APPENDIX G TO RH-1000 THROUGH RH-2110
ANNUAL LIMITS ON INTAKE (ALIs) AND DERIVED AIR CONCENTRATIONS (DACs) OF RADIONUCLIDES FOR OCCUPATIONAL EXPOSURE; EFFLUENT CONCENTRATIONS; CONCENTRATIONS FOR RELEASE TO SEWERAGE

			Table 1 Occupational Values			Table 2 Effluent Concentrations		Table 3 Releases to Sewers
			Col. 1	Col. 2	Col. 3	Col. 1	Col. 2	
			Oral Ingestion	Inhalation				
Atomic No.	Radionuclide	Class	ALI (μCi)	ALI (μCi)	DAC (μCi/ml)	Air (μCi/ml)	Water (μCi/ml)	Monthly Average Concentration (μCi/ml)
76	Osmium-189m	D, see ^{180}Os	8E+4	2E+5	1E-4	3E-7	1E-3	1E-2
		W, see ^{180}Os	-	2E+5	9E-5	3E-7	-	-
		Y, see ^{180}Os	-	2E+5	7E-5	2E-7	-	-
76	Osmium-191m	D, see ^{180}Os	1E+4	3E+4	1E-5	4E-8	2E-4	2E-3
		W, see ^{180}Os	-	2E+4	8E-6	3E-8	-	-
		Y, see ^{180}Os	-	2E+4	7E-6	2E-8	-	-
76	Osmium-191	D, see ^{180}Os	2E+3	2E+3	9E-7	3E-9	-	-
			LLI wall (3E+3)	-	-	-	3E-5	3E-4
		W, see ^{180}Os	-	2E+3	7E-7	2E-9	-	-
		Y, see ^{180}Os	-	1E+3	6E-7	2E-9	-	-
76	Osmium-193	D, see ^{180}Os	2E+3	5E+3	2E-6	6E-9	-	-
			LLI wall (2E+3)	-	-	-	2E-5	2E-4
		W, see ^{180}Os	-	3E+3	1E-6	4E-9	-	-
		Y, see ^{180}Os	-	3E+3	1E-6	4E-9	-	-
76	Osmium-194	D, see ^{180}Os	4E+2	4E+1	2E-8	6E-11	-	-
			LLI wall (6E+2)	-	-	-	8E-6	8E-5
		W, see ^{180}Os	-	6E+1	2E-8	8E-11	-	-
		Y, see ^{180}Os	-	8E+0	3E-9	1E-11	-	-
77	Iridium-182[2]	D, all compounds except those given for W and Y	4E+4	1E+5	6E-5	2E-7	-	-
			St wall (4E+4)	-	-	-	6E-4	6E-3
		W, halides, nitrates, and metallic iridium	-	2E+5	6E-5	2E-7	-	-
		Y, oxides and hydroxides	-	1E+5	5E-5	2E-7	-	-
77	Iridium-184	D, see ^{182}Ir	8E+3	2E+4	1E-5	3E-8	1E-4	1E-3
		W, see ^{182}Ir	-	3E+4	1E-5	5E-8	-	-
		Y, see ^{182}Ir	-	3E+4	1E-5	4E-8	-	-
77	Iridium-185	D, see ^{182}Ir	5E+3	1E+4	5E-6	2E-8	7E-5	7E-4
		W, see ^{182}Ir	-	1E+4	5E-6	2E-8	-	-
		Y, see ^{182}Ir	-	1E+4	4E-6	1E-8	-	-
77	Iridium-186	D, see ^{182}Ir	2E+3	8E+3	3E-6	1E-8	3E-5	3E-4
		W, see ^{182}Ir	-	6E+3	3E-6	9E-9	-	-
		Y, see ^{182}Ir	-	6E+3	2E-6	8E-9	-	-
77	Iridium-187	D, see ^{182}Ir	1E+4	3E+4	1E-5	5E-8	1E-4	1E-3
		W, see ^{182}Ir	-	3E+4	1E-5	4E-8	-	-
		Y, see ^{182}Ir	-	3E+4	1E-5	4E-8	-	-
77	Iridium-188	D, see ^{182}Ir	2E+3	5E+3	2E-6	6E-9	3E-5	3E-4
		W, see ^{182}Ir	-	4E+3	1E-6	5E-9	-	-
		Y, see ^{182}Ir	-	3E+3	1E-6	5E-9	-	-
77	Iridium-189	D, see ^{182}Ir	5E+3	5E+3	2E-6	7E-9	-	-
			LLI wall (5E+3)	-	-	-	7E-5	7E-4
		W, see ^{182}Ir	-	4E+3	2E-6	5E-9	-	-
		Y, see ^{182}Ir	-	4E+3	1E-6	5E-9	-	-
77	Iridium-190m[2]	D, see ^{182}Ir	2E+5	2E+5	8E-5	3E-7	2E-3	2E-2
		W, see ^{182}Ir	-	2E+5	9E-5	3E-7	-	-
		Y, see ^{182}Ir	-	2E+5	8E-5	3E-7	-	-

APPENDIX G TO RH-1000 THROUGH RH-2110
ANNUAL LIMITS ON INTAKE (ALIs) AND DERIVED AIR CONCENTRATIONS (DACs) OF RADIONUCLIDES FOR OCCUPATIONAL EXPOSURE; EFFLUENT CONCENTRATIONS; CONCENTRATIONS FOR RELEASE TO SEWERAGE

			Table 1 Occupational Values			Table 2 Effluent Concentrations		Table 3 Releases to Sewers
			Col. 1	Col. 2	Col. 3	Col. 1	Col. 2	
			Oral Ingestion	Inhalation				
Atomic No.	Radionuclide	Class	ALI (μCi)	ALI (μCi)	DAC (μCi/ml)	Air (μCi/ml)	Water (μCi/ml)	Monthly Average Concentration (μCi/ml)
77	Iridium-190	D, see ^{182}Ir	1E+3	9E+2	4E-7	1E-9	1E-5	1E-4
		W, see ^{182}Ir	-	1E+3	4E-7	1E-9	-	-
		Y, see ^{182}Ir	-	9E+2	4E-7	1E-9	-	-
77	Iridium-192m	D, see ^{182}Ir	3E+3	9E+1	4E-8	1E-10	4E-5	4E-4
		W, see ^{182}Ir	-	2E+2	9E-8	3E-10	-	-
		Y, see ^{182}Ir	-	2E+1	6E-9	2E-11	-	-
77	Iridium-192	D, see ^{182}Ir	9E+2	3E+2	1E-7	4E-10	1E-5	1E-4
		W, see ^{182}Ir	-	4E+2	2E-7	6E-10	-	-
		Y, see ^{182}Ir	-	2E+2	9E-8	3E-10	-	-
77	Iridium-194m	D, see ^{182}Ir	6E+2	9E+1	4E-8	1E-10	9E-6	9E-5
		W, see ^{182}Ir	-	2E+2	7E-8	2E-10	-	-
		Y, see ^{182}Ir	-	1E+2	4E-8	1E-10	-	-
77	Iridium-194	D, see ^{182}Ir	1E+3	3E+3	1E-6	4E-9	1E-5	1E-4
		W, see ^{182}Ir	-	2E+3	9E-7	3E-9	-	-
		Y, see ^{182}Ir	-	2E+3	8E-7	3E-9	-	-
77	Iridium-195m	D, see ^{182}Ir	8E+3	2E+4	1E-5	3E-8	1E-4	1E-3
		W, see ^{182}Ir	-	3E+4	1E-5	4E-8	-	-
		Y, see ^{182}Ir	-	2E+4	9E-6	3E-8	-	-
77	Iridium-195	D, see ^{182}Ir	1E+4	4E+4	2E-5	6E-8	2E-4	2E-3
		W, see ^{182}Ir	-	5E+4	2E-5	7E-8	-	-
		Y, see ^{182}Ir	-	4E+4	2E-5	6E-8	-	-
78	Platinum-186	D, all compounds	1E+4	4E+4	2E-5	5E-8	2E-4	2E-3
78	Platinum-188	D, all compounds	2E+3	2E+3	7E-7	2E-9	2E-5	2E-4
78	Platinum-189	D, all compounds	1E+4	3E+4	1E-5	4E-8	1E-4	1E-3
78	Platinum-191	D, all compounds	4E+3	8E+3	4E-6	1E-8	5E-5	5E-4
78	Platinum-193m	D, all compounds	3E+3	6E+3	3E-6	8E-9	-	-
			LLI wall (3E+4)	-	-	-	4E-5	4E-4
78	Platinum-193	D, all compounds	4E+4	2E+4	1E-5	3E-8	-	-
			LLI wall (5E+4)	-	-	-	6E-4	6E-3
78	Platinum-195m	D, all compounds	2E+3	4E+3	2E-6	6E-9	-	-
			LLI wall (2E+3)	-	-	-	3E-5	3E-4
78	Platinum-197m[2]	D, all compounds	2E+4	4E+4	2E-5	6E-8	2E-4	2E-3
78	Platinum-197	D, all compounds	3E+3	1E+4	4E-6	1E-8	4E-5	4E-4
78	Platinum-199[2]	D, all compounds	5E+4	1E+5	6E-5	2E-7	7E-4	7E-3
78	Platinum-200	D, all compounds	1E+3	3E+3	1E-6	5E-9	2E-5	2E-4
79	Gold-193	D, all compounds except those given for W and Y	9E+3	3E+4	1E-5	4E-8	1E-4	1E-3
		W, halides and nitrates	-	2E+4	9E-6	3E-8	-	-
		Y, oxides and hydroxides	-	2E+4	8E-6	3E-8	-	-
79	Gold-194	D, see ^{193}Au	3E+3	8E+3	3E-6	1E-8	4E-5	4E-4
		W, see ^{193}Au	-	5E+3	2E-6	8E-9	-	-
		Y, see ^{193}Au	-	5E+3	2E-6	7E-9	-	-

APPENDIX G TO RH-1000 THROUGH RH-2110
ANNUAL LIMITS ON INTAKE (ALIs) AND DERIVED AIR CONCENTRATIONS (DACs) OF RADIONUCLIDES FOR OCCUPATIONAL EXPOSURE; EFFLUENT CONCENTRATIONS; CONCENTRATIONS FOR RELEASE TO SEWERAGE

			Table 1 Occupational Values			Table 2 Effluent Concentrations		Table 3 Releases to Sewers
			Col. 1	Col. 2	Col. 3	Col. 1	Col. 2	
			Oral Ingestion	Inhalation				Monthly Average
Atomic No.	Radionuclide	Class	ALI (µCi)	ALI (µCi)	DAC (µCi/ml)	Air (µCi/ml)	Water (µCi/ml)	Concentration (µCi/ml)
79	Gold-195	D, see ^{193}Au	5E+3	1E+4	5E-6	2E-8	7E-5	7E-4
		W, see ^{193}Au	-	1E+3	6E-7	2E-9	-	-
		Y, see ^{193}Au	-	4E+2	2E-7	6E-10	-	-
79	Gold-198m	D, see ^{193}Au	1E+3	3E+3	1E-6	4E-9	1E-5	1E-4
		W, see ^{193}Au	-	1E+3	5E-7	2E-9	-	-
		Y, see ^{193}Au	-	1E+3	5E-7	2E-9	-	-
79	Gold-198	D, see ^{193}Au	1E+3	4E+3	2E-6	5E-9	2E-5	2E-4
		W, see ^{193}Au	-	2E+3	8E-7	3E-9	-	-
		Y, see ^{193}Au	-	2E+3	7E-7	2E-9	-	-
79	Gold-199	D, see ^{193}Au	3E+3	9E+3	4E-6	1E-8	-	-
			LLI wall (3E+3)	-	-	-	4E-5	4E-4
		W, see ^{193}Au	-	4E+3	2E-6	6E-9	-	-
		Y, see ^{193}Au	-	4E+3	2E-6	5E-9	-	-
79	Gold-200m	D, see ^{193}Au	1E+3	4E+3	1E-6	5E-9	2E-5	2E-4
		W, see ^{193}Au	-	3E+3	1E-6	4E-9	-	-
		Y, see ^{193}Au	-	2E+4	1E-6	3E-9	-	-
79	Gold-200[2]	D, see ^{193}Au	3E+4	6E+4	3E-5	9E-8	4E-4	4E-3
		W, see ^{193}Au	-	8E+4	3E-5	1E-7	-	-
		Y, see ^{193}Au	-	7E+4	3E-5	1E-7	-	-
79	Gold-201[2]	D, see ^{193}Au	7E+4	2E+5	9E-5	3E-7	-	-
			St wall (9E+4)	-	-	-	1E-3	1E-2
		W, see ^{193}Au	-	2E+5	1E-4	3E-7	-	-
		Y, see ^{193}Au	-	2E+5	9E-5	3E-7	-	-
80	Mercury-193m	Vapor	-	8E+3	4E-6	1E-8	-	-
		Organic D	4E+3	1E+4	5E-6	2E-8	6E-5	6E-4
		D, sulfates	3E+3	9E+3	4E-6	1E-8	4E-5	4E-4
		W, oxides, hydroxides, halides, nitrates, and sulfides	-	8E+3	3E-6	1E-8	-	-
80	Mercury-193	Vapor	-	3E+4	1E-5	4E-8	-	-
		Organic D	2E+4	6E+4	3E-5	9E-8	3E-4	3E-3
		D, see ^{193m}Hg	2E+4	4E+4	2E-5	6E-8	2E-4	2E-3
		W, see ^{193m}Hg	-	4E+4	2E-5	6E-8	-	-
80	Mercury-194	Vapor	-	3E+1	1E-8	4E-11	-	-
		Organic D	2E+1	3E+1	1E-8	4E-11	2E-7	2E-6
		D, see ^{193m}Hg	8E+2	4E+1	2E-8	6E-11	1E-5	1E-4
		W, see ^{193m}Hg	-	1E+2	5E-8	2E-10	-	-
80	Mercury-195m	Vapor	-	4E+3	2E-6	6E-9	-	-
		Organic D	3E+3	6E+3	3E-6	8E-9	4E-5	4E-4
		D, see ^{193m}Hg	2E+3	5E+3	2E-6	7E-9	3E-5	3E-4
		W, see ^{193m}Hg	-	4E+3	2E-6	5E-9	-	-
80	Mercury-195	Vapor	-	3E+4	1E-5	4E-8	-	-
		Organic D	2E+4	5E+4	2E-5	6E-8	2E-4	2E-3
		D, see ^{193m}Hg	1E+4	4E+4	1E-5	5E-8	2E-4	2E-3
		W, see ^{193m}Hg	-	3E+4	1E-5	5E-8	-	-
80	Mercury-197m	Vapor	-	5E+3	2E-6	7E-9	-	-
		Organic D	4E+3	9E+3	4E-6	1E-8	5E-5	5E-4
		D, see ^{193m}Hg	3E+3	7E+3	3E-6	1E-8	4E-5	4E-4
		W, see ^{193m}Hg	-	5E+3	2E-6	7E-9	-	-

APPENDIX G TO RH-1000 THROUGH RH-2110
ANNUAL LIMITS ON INTAKE (ALIs) AND DERIVED AIR CONCENTRATIONS (DACs) OF RADIONUCLIDES FOR OCCUPATIONAL EXPOSURE; EFFLUENT CONCENTRATIONS; CONCENTRATIONS FOR RELEASE TO SEWERAGE

36

			Table 1 Occupational Values			Table 2 Effluent Concentrations		Table 3 Releases to Sewers
			Col. 1	Col. 2	Col. 3	Col. 1	Col. 2	
			Oral Ingestion	Inhalation				Monthly Average
Atomic No.	Radionuclide	Class	ALI (µCi)	ALI (µCi)	DAC (µCi/ml)	Air (µCi/ml)	Water (µCi/ml)	Concentration (µCi/ml)
80	Mercury-197	Vapor	-	8E+3	4E-6	1E-8	-	-
		Organic D	7E+3	1E+4	6E-6	2E-8	9E-5	9E-4
		D, see ^{193m}Hg	6E+3	1E+4	5E-6	2E-8	8E-5	8E-4
		W, see ^{193m}Hg	-	9E+3	4E-6	1E-8	-	-
80	Mercury-199m[2]	Vapor	-	8E+4	3E-5	1E-7	-	-
		Organic D	6E+4	2E+5	7E-5	2E-7	-	-
			St wall (1E+5)	-	-	-	1E-3	1E-2
		D, see ^{193m}Hg	6E+4	1E+5	6E-5	2E-7	8E-4	8E-3
		W, see ^{193m}Hg	-	2E+5	7E-5	2E-7	-	-
80	Mercury-203	Vapor	-	8E+2	4E-7	1E-9	-	-
		Organic D	5E+2	8E+2	3E-7	1E-9	7E-6	7E-5
		D, see ^{193m}Hg	2E+3	1E+3	5E-7	2E-9	3E-5	3E-4
		W, see ^{193m}Hg	-	1E+3	5E-7	2E-9	-	-
81	Thallium-194m[2]	D, all compounds	5E+4	2E+5	6E-5	2E-7	-	-
			St wall (7E+4)	-	-	-	1E-3	1E-2
81	Thallium-194[2]	D, all compounds	3E+5	6E+5	2E-4	8E-7	-	-
			St wall (3E+5)	-	-	-	4E-3	4E-2
81	Thallium-195[2]	D, all compounds	6E+4	1E+5	5E-5	2E-7	9E-4	9E-3
81	Thallium-197	D, all compounds	7E+4	1E+5	5E-5	2E-7	1E-3	1E-2
81	Thallium-198m[2]	D, all compounds	3E+4	5E+4	2E-5	8E-8	4E-4	4E-3
81	Thallium-198	D, all compounds	2E+4	3E+4	1E-5	5E-8	3E-4	3E-3
81	Thallium-199	D, all compounds	6E+4	8E+4	4E-5	1E-7	9E-4	9E-3
81	Thallium-200	D, all compounds	8E+3	1E+4	5E-6	2E-8	1E-4	1E-3
81	Thallium-201	D, all compounds	2E+4	2E+4	9E-6	3E-8	2E-4	2E-3
81	Thallium-202	D, all compounds	4E+3	5E+3	2E-6	7E-9	5E-5	5E-4
81	Thallium-204	D, all compounds	2E+3	2E+3	9E-7	3E-9	2E-5	2E-4
82	Lead-195m[2]	D, all compounds	6E+4	2E+5	8E-5	3E-7	8E-4	8E-3
82	Lead-198	D, all compounds	3E+4	6E+4	3E-5	9E-8	4E-4	4E-3
82	Lead-199[2]	D, all compounds	2E+4	7E+4	3E-5	1E-7	3E-4	3E-3
82	Lead-200	D, all compounds	3E+3	6E+3	3E-6	9E-9	4E-5	4E-4
82	Lead-201	D, all compounds	7E+3	2E+4	8E-6	3E-8	1E-4	1E-3
82	Lead-202m	D, all compounds	9E+3	3E+4	1E-5	4E-8	1E-4	1E-3
82	Lead-202	D, all compounds	1E+2	5E+1	2E-8	7E-11	2E-6	2E-5
82	Lead-203	D, all compounds	5E+3	9E+3	4E-6	1E-8	7E-5	7E-4
82	Lead-205	D, all compounds	4E+3	1E+3	6E-7	2E-9	5E-5	5E-4
82	Lead-209	D, all compounds	2E+4	6E+4	2E-5	8E-8	3E-4	3E-3
82	Lead-210	D, all compounds	6E1	2E1	1E-10	-	-	-
			Bone surf (1E+0)	Bone surf (4E-1)	-	6E-13	1E-8	1E-7

APPENDIX G TO RH-1000 THROUGH RH-2110
ANNUAL LIMITS ON INTAKE (ALIs) AND DERIVED AIR CONCENTRATIONS (DACs) OF RADIONUCLIDES FOR OCCUPATIONAL EXPOSURE; EFFLUENT CONCENTRATIONS; CONCENTRATIONS FOR RELEASE TO SEWERAGE

			Table 1 Occupational Values			Table 2 Effluent Concentrations		Table 3 Releases to Sewers
			Col. 1	Col. 2	Col. 3	Col. 1	Col. 2	
			Oral Ingestion	Inhalation				
Atomic No.	Radionuclide	Class	ALI (μCi)	ALI (μCi)	DAC (μCi/ml)	Air (μCi/ml)	Water (μCi/ml)	Monthly Average Concentration (μCi/ml)
82	Lead-211[2]	D, all compounds	1E+4	6E+2	3E-7	9E-10	2E-4	2E-3
82	Lead-212	D, all compounds	8E+1	3E+1	1E-8	5E-11	-	-
			Bone surf (1E+2)	-	-	-	2E-6	2E-5
82	Lead-214[2]	D, all compounds	9E+3	8E+2	3E-7	1E-9	1E-4	1E-3
83	Bismuth-200[2]	D, nitrates	3E+4	8E+4	4E-5	1E-7	4E-4	4E-3
		W, all other compounds	-	1E+5	4E-5	1E-7	-	-
83	Bismuth-201[2]	D, see ^{200}Bi	1E+4	3E+4	1E-5	4E-8	2E-4	2E-3
		W, see ^{200}Bi	-	4E+4	2E-5	5E-8	-	-
83	Bismuth-202[2]	D, see ^{200}Bi	1E+4	4E+4	2E-5	6E-8	2E-4	2E-3
		W, see ^{200}Bi	-	8E+4	3E-5	1E-7	-	-
83	Bismuth-203	D, see ^{200}Bi	2E+3	7E+3	3E-6	9E-9	3E-5	3E-4
		W, see ^{200}Bi	-	6E+3	3E-6	9E-9	-	-
83	Bismuth-205	D, see ^{200}Bi	1E+3	3E+3	1E-6	3E-9	2E-5	2E-4
		W, see ^{200}Bi	-	1E+3	5E-7	2E-9	-	-
83	Bismuth-206	D, see ^{200}Bi	6E+2	1E+3	6E-7	2E-9	9E-6	9E-5
		W, see ^{200}Bi	-	9E+2	4E-7	1E-9	-	-
83	Bismuth-207	D, see ^{200}Bi	1E+3	2E+3	7E-7	2E-9	1E-5	1E-4
		W, see ^{200}Bi	-	4E+2	1E-7	5E-10	-	-
83	Bismuth-210m	D, see ^{200}Bi	4E+1	5E+0	2E-9	-	-	-
			Kidneys (6E+1)	Kidneys (6E+0)	-	9E-12	8E-7	8E-6
		W, see ^{200}Bi	-	7E-1	3E-10	9E-13	-	-
83	Bismuth-210	D, see ^{200}Bi	8E+2	2E+2	1E-7	-	1E-5	1E-4
			-	Kidneys (4E+2)	-	5E-10	-	-
		W, see ^{200}Bi	-	3E+1	1E-8	4E-11	-	-
83	Bismuth-212[2]	D, see ^{200}Bi	5E+3	2E+2	1E-7	3E-10	7E-5	7E-4
		W, see ^{200}Bi	-	3E+2	1E-7	4E-10	-	-
83	Bismuth-213[2]	D, see ^{200}Bi	7E+3	3E+2	1E-7	4E-10	1E-4	1E-3
		W, see ^{200}Bi	-	4E+2	1E-7	5E-10	-	-
83	Bismuth-214[2]	D, see ^{200}Bi	2E+4	8E+2	3E-7	1E-9	-	-
			St wall (2E+4)	-	-	-	3E-4	3E-3
		W, see ^{200}Bi	-	9E-2	4E-7	1E-9	-	-
84	Polonium-203[2]	D, all compounds except those given for W	3E+4	6E+4	3E-5	9E-8	3E-4	3E-3
		W, oxides, hydroxides, and nitrates	-	9E+4	4E-5	1E-7	-	-
84	Polonium-205[2]	D, see ^{203}Po	2E+4	4E+4	2E-5	5E-8	3E-4	3E-3
		W, see ^{203}Po	-	7E+4	3E-5	1E-7	-	-
84	Polonium-207	D, see ^{203}Po	8E+3	3E+4	1E-5	3E-8	1E-4	1E-3
		W, see ^{203}Po	-	3E+4	1E-5	4E-8	-	-
84	Polonium-210	D, see ^{203}Po	3E+0	6E-1	3E-10	9E-13	4E-8	4E-7
		W, see ^{203}Po	-	6E-1	3E-10	9E-13	-	-
85	Astatine-207[2]	D, halides	6E+3	3E+3	1E-6	4E-9	8E-5	8E-4
		W	-	2E+3	9E-7	3E-9	-	-

APPENDIX G TO RH-1000 THROUGH RH-2110
ANNUAL LIMITS ON INTAKE (ALIs) AND DERIVED AIR CONCENTRATIONS (DACs) OF RADIONUCLIDES FOR OCCUPATIONAL EXPOSURE; EFFLUENT CONCENTRATIONS; CONCENTRATIONS FOR RELEASE TO SEWERAGE

38

Atomic No.	Radionuclide	Class	Table 1 Occupational Values Col. 1 Oral Ingestion ALI (µCi)	Col. 2 Inhalation ALI (µCi)	Col. 3 Inhalation DAC (µCi/ml)	Table 2 Effluent Concentrations Col. 1 Air (µCi/ml)	Col. 2 Water (µCi/ml)	Table 3 Releases to Sewers Monthly Average Concentration (µCi/ml)
85	Astatine-211	D, halides	1E+2	8E+1	3E-8	1E-10	2E-6	2E-5
		W	-	5E+1	2E-8	8E-11	-	-
86	Radon-220	With daughters removed	-	2E+4	7E-6	2E-8	-	-
		With daughters present	-	2E+1 (or 12 working level months)	9E-9	3E-11 (or 1.0 working level)	-	-
86	Radon-222	With daughters removed	-	1E+4	4E-6	1E-8	-	-
		With daughters present	-	1E+2 (or 4 working level months)	3E-8	1E-10 (or 0.33 working level)	-	-
87	Francium-222[2]	D, all compounds	2E+3	5E+2	2E-7	6E-10	3E-5	3E-4
87	Francium-223[2]	D, all compounds	6E+2	8E+2	3E-7	1E-9	8E-6	8E-5
88	Radium-223	W, all compounds	5E+0	7E-1	3E-10	9E-13	-	-
			Bone surf (9E+0)	-	-	-	1E-7	1E-6
88	Radium-224	W, all compounds	8E+0	2E+0	7E-10	2E-12	-	-
			Bone surf (2E+1)	-	-	-	2E-7	2E-6
88	Radium-225	W, all compounds	8E+0	7E-1	3E-10	9E-13	-	-
			Bone surf (2E+1)	-	-	-	2E-7	2E-6
88	Radium-226	W, all compounds	2E+0	6E-1	3E-10	9E-13	-	-
			Bone surf (5E+0)	-	-	-	6E-8	6E-7
88	Radium-227[2]	W, all compounds	2E+4	1E+4	6E-6	-	-	-
			Bone surf (2E+4)	Bone surf (2E+4)	-	3E-8	3E-4	3E-3
88	Radium-228	W, all compounds	2E+0	1E+0	5E-10	2E-12	-	-
			Bone surf (4E+0)	-	-	-	6E-8	6E-7
89	Actinium-224	D, all compounds except those given for W and Y	2E+3	3E+1	1E-8	-	-	-
			LLI wall (2E+3)	Bone surf (4E+1)	-	5E-11	3E-5	3E-4
		W, halides and nitrates	-	5E+1	2E-8	7E-11	-	-
		Y, oxides and hydroxides	-	5E+1	2E-8	6E-11	-	-
89	Actinium-225	D, see ^{224}Ac	5E+1	3E-1	1E-10	-	-	-
			LLI wall (5E+1)	Bone surf (5E-1)	-	7E-13	7E-7	7E-6
		W, see ^{224}Ac	-	6E-1	3E-10	9E-13	-	-
		Y, see ^{224}Ac	-	6E-1	3E-10	9E-13	-	-
89	Actinium-226	D, see ^{224}Ac	1E+2	3E+0	1E-9	-	-	-
			LLI wall (1E+2)	Bone surf (4E+0)	-	5E-12	2E-6	2E-5
		W, see ^{224}Ac	-	5E+0	2E-9	7E-12	-	-
		Y, see ^{224}Ac	-	5E+0	2E-9	6E-12	-	-

APPENDIX G TO RH-1000 THROUGH RH-2110
ANNUAL LIMITS ON INTAKE (ALIs) AND DERIVED AIR CONCENTRATIONS (DACs) OF RADIONUCLIDES FOR OCCUPATIONAL EXPOSURE; EFFLUENT CONCENTRATIONS; CONCENTRATIONS FOR RELEASE TO SEWERAGE

			Table 1 Occupational Values			Table 2 Effluent Concentrations		Table 3 Releases to Sewers
			Col. 1	Col. 2	Col. 3	Col. 1	Col. 2	
			Oral Ingestion	Inhalation				
Atomic No.	Radionuclide	Class	ALI (μCi)	ALI (μCi)	DAC (μCi/ml)	Air (μCi/ml)	Water (μCi/ml)	Monthly Average Concentration (μCi/ml)
89	Actinium-227	D, see ^{224}Ac	2E-1	4E-4	2E-13	-	-	-
			Bone surf (4E-1)	Bone surf (8E-4)	-	1E-15	5E-9	5E-8
		W, see ^{224}Ac	-	2E-3	7E-13	-	-	-
			-	Bone surf (3E-3)	-	4E-15	-	-
		Y, see ^{224}Ac	-	4E-3	2E-12	6E-15	-	-
89	Actinium-228	D, see ^{224}Ac	2E+3	9E+0	4E-9	-	3E-5	3E-4
			-	Bone surf (2E+1)	-	2E-11	-	-
		W, see ^{224}Ac	-	4E+1	2E-8	-	-	-
			-	Bone surf (6E+1)	-	8E-11	-	-
		Y, see ^{224}Ac	-	4E+1	2E-8	6E-11	-	-
90	Thorium-226[2]	W, all compounds except those given for Y	5E+3	2E+2	6E-8	2E-10	-	-
			St wall (5E+3)	-	-	-	7E-5	7E-4
		Y, oxides and hydroxides	-	1E+2	6E-8	2E-10	-	-
90	Thorium-227	W, see ^{226}Th	1E+2	3E-1	1E-10	5E-13	2E-6	2E-5
		Y, see ^{226}Th	-	3E-1	1E-10	5E-13	-	-
90	Thorium-228	W, see ^{226}Th	6E+0	1E-2	4E-12	-	-	-
			Bone surf (1E+1)	Bone surf (2E-2)	-	3E-14	2E-7	2E-6
		Y, see ^{226}Th	-	2E-2	7E-12	2E-14	-	-
90	Thorium-229	W, see ^{226}Th	6E-1	9E-4	4E-13	-	-	-
			Bone surf (1E+0)	Bone surf (2E-3)	-	3E-15	2E-8	2E-7
		Y, see ^{226}Th	-	2E-3	1E-12	-	-	-
			-	Bone surf (3E-3)	-	4E-15	-	-
90	Thorium-230	W, see ^{226}Th	4E+0	6E-3	3E-12	-	-	-
			Bone surf (9E+0)	Bone surf (2E-2)	-	2E-14	1E-7	1E-6
		Y, see ^{226}Th	-	2E-2	6E-12	-	-	-
			-	Bone surf (2E-2)	-	3E-14	-	-
90	Thorium-231	W, see ^{226}Th	4E+3	6E+3	3E-6	9E-9	5E-5	5E-4
		Y, see ^{226}Th	-	6E+3	3E-6	9E-9	-	-
90	Thorium-232	W, see ^{226}Th	7E-1	1E-3	5E-13	-	-	-
			Bone surf (2E+0)	Bone surf (3E-3)	-	4E-15	3E-8	3E-7
		Y, see ^{226}Th	-	3E-3	1E-12	-	-	-
			-	Bone surf (4E-3)	-	6E-15	-	-
90	Thorium-234	W, see ^{226}Th	3E+2	2E+2	8E-8	3E-10	-	-
			LLI wall (4E+2)	-	-	-	5E-6	5E-5
		Y, see ^{226}Th	-	2E+2	6E-8	2E-10	-	-
91	Protactinium-227[2]	W, all compounds except those given for Y	4E+3	1E+2	5E-8	2E-10	5E-5	5E-4
		Y, oxides and hydroxides	-	1E+2	4E-8	1E-10	-	-
91	Protactinium-228	W, see ^{227}Pa	1E+3	1E+1	5E-9	-	2E-5	2E-4
			-	Bone surf (2E+1)	-	3E-11	-	-

APPENDIX G TO RH-1000 THROUGH RH-2110
ANNUAL LIMITS ON INTAKE (ALIs) AND DERIVED AIR CONCENTRATIONS (DACs) OF RADIONUCLIDES FOR OCCUPATIONAL EXPOSURE; EFFLUENT CONCENTRATIONS; CONCENTRATIONS FOR RELEASE TO SEWERAGE

			Table 1 Occupational Values			Table 2 Effluent Concentrations		Table 3 Releases to Sewers
			Col. 1	Col. 2	Col. 3	Col. 1	Col. 2	
			Oral Ingestion	Inhalation				
Atomic No.	Radionuclide	Class	ALI (μCi)	ALI (μCi)	DAC (μCi/ml)	Air (μCi/ml)	Water (μCi/ml)	Monthly Average Concentration (μCi/ml)
		Y, see ^{227}Pa	-	1E+1	5E-9	2E-11	-	-
91	Protactinium-230	W, see ^{227}Pa	6E+2	5E+0	2E-9	7E-12	-	-
			Bone surf (9E+2)	-	-	-	1E-5	1E-4
		Y, see ^{227}Pa	-	4E+0	1E-9	5E-12	-	-
91	Protactinium-231	W, see ^{227}Pa	2E-1	2E-3	6E-13	-	-	-
			Bone surf (5E-1)	Bone surf (4E-3)	-	6E-15	6E-9	6E-8
		Y, see ^{227}Pa	-	4E-3	2E-12	-	-	-
			-	Bone surf (6E-3)	-	8E-15	-	-
91	Protactinium-232	W, see ^{227}Pa	1E+3	2E+1	9E-9	-	2E-5	2E-4
			-	Bone surf (6E+1)	-	8E-11	-	-
		Y, see ^{227}Pa	-	6E+1	2E-8	-	-	-
			-	Bone surf (7E+1)	-	1E-10	-	-
91	Protactinium-233	W, see ^{227}Pa	1E+3	7E+2	3E-7	1E-9	-	-
			LLI wall (2E+3)	-	-	-	2E-5	2E-4
		Y, see ^{227}Pa	-	6E+2	2E-7	8E-10	-	-
91	Protactinium-234	W, see ^{227}Pa	2E+3	8E+3	3E-6	1E-8	3E-5	3E-4
		Y, see ^{227}Pa	-	7E+3	3E-6	9E-9	-	-
92	Uranium-230	D, UF, UOF, UO(NO)	4E+0	4E-1	2E-10	-	-	-
			Bone surf (6E+0)	Bone surf (6E-1)	-	8E-13	8E-8	8E-7
		W, UO, UF, UCl	-	4E-1	1E-10	5E-13	-	-
		Y, UO, UO	-	3E-1	1E-10	4E-13	-	-
92	Uranium-231	D, see ^{230}U	5E+3	8E+3	3E-6	1E-8	-	-
			LLI wall (4E+3)	-	-	-	6E-5	6E-4
		W, see ^{230}U	-	6E+3	2E-6	8E-9	-	-
		Y, see ^{230}U	-	5E+3	2E-6	6E-9	-	-
92	Uranium-232	D, see ^{230}U	2E+0	2E-1	9E-11	-	-	-
			Bone surf (4E+0)	Bone surf (4E-1)	-	6E-13	6E-8	6E-7
		W, see ^{230}U	-	4E-1	2E-10	5E-13	-	-
		Y, see ^{230}U	-	8E-3	3E-12	1E-14	-	-
92	Uranium-233	D, see ^{230}U	1E+1	1E+0	5E-10	-	-	-
			Bone surf (2E+1)	Bone surf (2E+0)	-	3E-12	3E-7	3E-6
		W, see ^{230}U	-	7E-1	3E-10	1E-12	-	-
		Y, see ^{230}U	-	4E-2	2E-11	5E-14	-	-
92	Uranium-234[3]	D, see ^{230}U	1E+1	1E+0	5E-10	-	-	-
			Bone surf (2E+1)	Bone surf (2E+0)	-	3E-12	3E-7	3E-6
		W, see ^{230}U	-	7E-1	3E-10	1E-12	-	-
		Y, see ^{230}U	-	4E-2	2E-11	5E-14	-	-
92	Uranium-235[3]	D, see ^{230}U	1E+1	1E+0	6E-10	-	-	-
			Bone surf (2E+1)	Bone surf (2E+0)	-	3E-12	3E-7	3E-6
		W, see ^{230}U	-	8E-1	3E-10	1E-12	-	-
		Y, see ^{230}U	-	4E-2	2E-11	6E-14	-	-

APPENDIX G TO RH-1000 THROUGH RH-2110
ANNUAL LIMITS ON INTAKE (ALIs) AND DERIVED AIR CONCENTRATIONS (DACs) OF RADIONUCLIDES FOR OCCUPATIONAL EXPOSURE; EFFLUENT CONCENTRATIONS; CONCENTRATIONS FOR RELEASE TO SEWERAGE

41

			Table 1 Occupational Values			Table 2 Effluent Concentrations		Table 3 Releases to Sewers
			Col. 1	Col. 2	Col. 3	Col. 1	Col. 2	
			Oral Ingestion	Inhalation				
Atomic No.	Radionuclide	Class	ALI (µCi)	ALI (µCi)	DAC (µCi/ml)	Air (µCi/ml)	Water (µCi/ml)	Monthly Average Concentration (µCi/ml)
92	Uranium-236	D, see ^{230}U	1E+1	1E+0	5E-10	-	-	-
			Bone surf (2E+1)	Bone surf (2E+0)	-	3E-12	3E-7	3E-6
		W, see ^{230}U	-	8E-1	3E-10	1E-12	-	-
		Y, see ^{230}U	-	4E-2	2E-11	6E-14	-	-
92	Uranium-237	D, see ^{230}U	2E+3	3E+3	1E-6	4E-9	-	-
			LLI wall (2E+3)	-	-	-	3E-5	3E-4
		W, see ^{230}U	-	2E+3	7E-7	2E-9	-	-
		Y, see ^{230}U	-	2E+3	6E-7	2E-9	-	-
92	Uranium-238[3]	D, see ^{230}U	1E+1	1E+0	6E-10	-	-	-
			Bone surf (2E+1)	Bone surf (2E+0)	-	3E-12	3E-7	3E-6
		W, see ^{230}U	-	8E-1	3E-10	1E-12	-	-
		Y, see ^{230}U	-	4E-2	2E-11	6E-14	-	-
92	Uranium-239[2]	D, see ^{230}U	7E+4	2E+5	8E-5	3E-7	9E-4	9E-3
		W, see ^{230}U	-	2E+5	7E-5	2E-7	-	-
		Y, see ^{230}U	-	2E+5	6E-5	2E-7	-	-
92	Uranium-240	D, see ^{230}U	1E+3	4E+3	2E-6	5E-9	2E-5	2E-4
		W, see ^{230}U	-	3E+3	1E-6	4E-9	-	-
		Y, see ^{230}U	-	2E+3	1E-6	3E-9	-	-
92	Uranium-natural[3]	D, see ^{230}U	1E+1	1E+0	5E-10	-	-	-
			Bone surf (2E+1)	Bone surf (2E+0)	-	3E-12	3E-7	3E-6
		W, see ^{230}U	-	8E-1	3E-10	9E-13	-	-
		Y, see ^{230}U	-	5E-2	2E-11	9E-14	-	-
93	Neptunium-232[2]	W, all compounds	1E+5	2E+3	7E-7	-	2E-3	2E-2
			-	Bone surf (5E+2)	-	6E-9	-	-
93	Neptunium-233[2]	W, all compounds	8E+5	3E+6	1E-3	4E-6	1E-2	1E-1
93	Neptunium-234	W, all compounds	2E+3	3E+3	1E-6	4E-9	3E-5	3E-4
93	Neptunium-235	W, all compounds	2E+4	8E+2	3E-7	-	-	-
			LLI wall (2E+4)	Bone surf (1E+3)	-	2E-9	3E-4	3E-3
93	Neptunium-236 (1.15E+5 y)	W, all compounds	3E+0	2E-2	9E-12	-	-	-
			Bone surf (6E+0)	Bone surf (5E-2)	-	8E-14	9E-8	9E-7
93	Neptunium-236 (22.5 h)	W, all compounds	3E+3	3E+1	1E-8	-	-	-
			Bone surf (4E+3)	Bone surf (7E+1)	-	1E-10	5E-5	5E-4
93	Neptunium-237	W, all compounds	5E-1	4E-3	2E-12	-	-	-
			Bone surf (1E+0)	Bone surf (1E-2)	-	1E-14	2E-8	2E-7
93	Neptunium-238	W, all compounds	1E+3	6E+1	3E-8	-	2E-5	2E-4
			-	Bone surf (2E+2)	-	2E-10	-	-
93	Neptunium-239	W, all compounds	2E+3	2E+3	9E-7	3E-9	-	-
			LLI wall (2E+3)	-	-	-	2E-5	2E-4
93	Neptunium-240[2]	W, all compounds	2E+4	8E+4	3E-5	1E-7	3E-4	3E-3

APPENDIX G TO RH-1000 THROUGH RH-2110
ANNUAL LIMITS ON INTAKE (ALIs) AND DERIVED AIR CONCENTRATIONS (DACs) OF RADIONUCLIDES FOR OCCUPATIONAL EXPOSURE; EFFLUENT CONCENTRATIONS; CONCENTRATIONS FOR RELEASE TO SEWERAGE

42

			Table 1 Occupational Values			Table 2 Effluent Concentrations		Table 3 Releases to Sewers
			Col. 1	Col. 2	Col. 3	Col. 1	Col. 2	
			Oral Ingestion	Inhalation				
Atomic No.	Radionuclide	Class	ALI (μCi)	ALI (μCi)	DAC (μCi/ml)	Air (μCi/ml)	Water (μCi/ml)	Monthly Average Concentration (μCi/ml)
94	Plutonium-234	W, all compounds except PuO	8E+3	2E+2	9E-8	3E-10	1E-4	1E-3
		Y, PuO	-	2E+2	8E-8	3E-10	-	-
94	Plutonium-235[2]	W, see ^{234}Pu	9E+5	3E+6	1E-3	4E-6	1E-2	1E-1
		Y, see ^{234}Pu	-	3E+6	1E-3	3E-6	-	-
94	Plutonium-236	W, see ^{234}Pu	2E+0	2E-2	8E-12	-	-	-
			Bone surf (4E+0)	Bone surf (4E-2)	-	5E-14	6E-8	6E-7
		Y, see ^{234}Pu	-	4E-2	2E-11	6E-14	-	-
94	Plutonium-237	W, see ^{234}Pu	1E+4	3E+3	1E-6	5E-9	2E-4	2E-3
		Y, see ^{234}Pu	-	3E+3	1E-6	4E-9	-	-
94	Plutonium-238	W, see ^{234}Pu	9E-1	7E-3	3E-12	-	-	-
			Bone surf (2E+0)	Bone surf (1E-2)	-	2E-14	2E-8	2E-7
		Y, see ^{234}Pu	-	2E-2	8E-12	2E-14	-	-
94	Plutonium-239	W, see ^{234}Pu	8E-1	6E-3	3E-12	-	-	-
			Bone surf (1E+0)	Bone surf (1E-2)	-	2E-14	2E-8	2E-7
		Y, see ^{234}Pu	-	2E-2	7E-12	-	-	-
			-	Bone surf (2E-2)	-	2E-14	-	-
94	Plutonium-240	W, see ^{234}Pu	8E-1	6E-3	3E-12	-	-	-
			Bone surf (1E+0)	Bone surf (1E-2)	-	2E-14	2E-8	2E-7
		Y, see ^{234}Pu	-	2E-2	7E-12	-	-	-
			-	Bone surf (2E-2)	-	2E-14	-	-
94	Plutonium-241	W, see ^{234}Pu	4E+1	3E-1	1E-10	-	-	-
			Bone surf (7E+1)	Bone surf (6E-1)	-	8E-13	1E-6	1E-5
		Y, see ^{234}Pu	-	8E-1	3E-10	-	-	-
			-	Bone surf (1E+0)	-	1E-12	-	-
94	Plutonium-242	W, see ^{234}Pu	8E-1	7E-3	3E-12	-	-	-
			Bone surf (1E+0)	Bone surf (1E-2)	-	2E-14	2E-8	2E-7
		Y, see ^{234}Pu	-	2E-2	7E-12	-	-	-
			-	Bone surf (2E-2)	-	2E-14	-	-
94	Plutonium-243	W, see ^{234}Pu	2E+4	4E+4	2E-5	5E-8	2E-4	2E-3
		Y, see ^{234}Pu	-	4E+4	2E-5	5E-8	-	-
94	Plutonium-244	W, see ^{234}Pu	8E-1	7E-3	3E-12	-	-	-
			Bone surf (2E+0)	Bone surf (1E-2)	-	2E-14	2E-8	2E-7
		Y, see ^{234}Pu	-	2E-2	7E-12	-	-	-
			-	Bone surf (2E-2)	-	2E-14	-	-
94	Plutonium-245	W, see ^{234}Pu	2E+3	5E+3	2E-6	6E-9	3E-5	3E-4
		Y, see ^{234}Pu	-	4E+3	2E-6	6E-9	-	-
94	Plutonium-246	W, see ^{234}Pu	4E+2	3E+2	1E-7	4E-10	-	-
			LLI wall (4E+2)	-	-	-	6E-6	6E-5
		Y, see ^{234}Pu	-	3E+2	1E-7	4E-10	-	-

APPENDIX G TO RH-1000 THROUGH RH-2110
ANNUAL LIMITS ON INTAKE (ALIs) AND DERIVED AIR CONCENTRATIONS (DACs) OF RADIONUCLIDES FOR OCCUPATIONAL EXPOSURE; EFFLUENT CONCENTRATIONS; CONCENTRATIONS FOR RELEASE TO SEWERAGE

			Table 1 Occupational Values			Table 2 Effluent Concentrations		Table 3 Releases to Sewers
			Col. 1	Col. 2	Col. 3	Col. 1	Col. 2	
			Oral Ingestion	Inhalation				
Atomic No.	Radionuclide	Class	ALI (µCi)	ALI (µCi)	DAC (µCi/ml)	Air (µCi/ml)	Water (µCi/ml)	Monthly Average Concentration (µCi/ml)
95	Americium-237[2]	W, all compounds	8E+4	3E+5	1E-4	4E-7	1E-3	1E-2
95	Americium-238[2]	W, all compounds	4E+4	3E+3	1E-6	-	5E-4	5E-3
			-	Bone surf (6E+3)	-	9E-9	-	-
95	Americium-239	W, all compounds	5E+3	1E+4	5E-6	2E-8	7E-5	7E-4
95	Americium-240	W, all compounds	2E+3	3E+3	1E-6	4E-9	3E-5	3E-4
95	Americium-241	W, all compounds	8E-1	6E-3	3E-12	-	-	-
			Bone surf (1E+0)	Bone surf (1E-2)	-	2E-14	2E-8	2E-7
95	Americium-242m	W, all compounds	8E-1	6E-3	3E-12	-	-	-
			Bone surf (1E+0)	Bone surf (1E-2)	-	2E-14	2E-8	2E-7
95	Americium-242	W, all compounds	4E+3	8E+1	4E-8	-	5E-5	5E-4
			-	Bone surf (9E+1)	-	1E-10	-	-
95	Americium-243	W, all compounds	8E-1	6E-3	3E-12	-	-	-
			Bone surf (1E+0)	Bone surf (1E-2)	-	2E-14	2E-8	2E-7
95	Americium-244m[2]	W, all compounds	6E+4	4E+3	2E-6	-	-	-
			St wall (8E+4)	Bone surf (7E+3)	-	1E-8	1E-3	1E-2
95	Americium-244	W, all compounds	3E+3	2E+2	8E-8	-	4E-5	4E-4
			-	Bone surf (3E+2)	-	4E-10	-	-
95	Americium-245	W, all compounds	3E+4	8E+4	3E-5	1E-7	4E-4	4E-3
95	Americium-246m[2]	W, all compounds	5E+4	2E+5	8E-5	3E-7	-	-
			St wall (6E+4)	-	-	-	8E-4	8E-3
95	Americium-246[2]	W, all compounds	3E+4	1E+5	4E-5	1E-7	4E-4	4E-3
96	Curium-238	W, all compounds	2E+4	1E+3	5E-7	2E-9	2E-4	2E-3
96	Curium-240	W, all compounds	6E+1	6E-1	2E-10	-	-	-
			Bone surf (8E+1)	Bone surf (6E-1)	-	9E-13	1E-6	1E-5
96	Curium-241	W, all compounds	1E+3	3E+1	1E-8	-	2E-5	2E-4
			-	Bone surf (4E+1)	-	5E-11	-	-
96	Curium-242	W, all compounds	3E+1	3E-1	1E-10	-	-	-
			Bone surf (5E+1)	Bone surf (3E-1)	-	4E-13	7E-7	7E-6
96	Curium-243	W, all compounds	1E+0	9E-3	4E-12	-	-	-
			Bone surf (2E+0)	Bone surf (2E-2)	-	2E-14	3E-8	3E-7
96	Curium-244	W, all compounds	1E+0	1E-2	5E-12	-	-	-
			Bone surf (3E+0)	Bone surf (2E-2)	-	3E-14	3E-8	3E-7
96	Curium-245	W, all compounds	7E-1	6E-3	3E-12	-	-	-
			Bone surf (1E+0)	Bone surf (1E-2)	-	2E-14	2E-8	2E-7

APPENDIX G TO RH-1000 THROUGH RH-2110
ANNUAL LIMITS ON INTAKE (ALIs) AND DERIVED AIR CONCENTRATIONS (DACs) OF RADIONUCLIDES FOR OCCUPATIONAL EXPOSURE; EFFLUENT CONCENTRATIONS; CONCENTRATIONS FOR RELEASE TO SEWERAGE

			Table 1 Occupational Values			Table 2 Effluent Concentrations		Table 3 Releases to Sewers
			Col. 1	Col. 2	Col. 3	Col. 1	Col. 2	
			Oral Ingestion	Inhalation				
Atomic No.	Radionuclide	Class	ALI (µCi)	ALI (µCi)	DAC (µCi/ml)	Air (µCi/ml)	Water (µCi/ml)	Monthly Average Concentration (µCi/ml)
96	Curium-246	W, all compounds	7E-1	6E-3	3E-12	-	-	-
			Bone surf (1E+0)	Bone surf (1E-2)	-	2E-14	2E-8	2E-7
96	Curium-247	W, all compounds	8E-1	6E-3	3E-12	-	-	-
			Bone surf (1E+0)	Bone surf (1E-2)	-	2E-14	2E-8	2E-7
96	Curium-248	W, all compounds	2E-1	2E-3	7E-13	-	-	-
			Bone surf (4E-1)	Bone surf (3E-3)	-	4E-15	5E-9	5E-8
96	Curium-249[2]	W, all compounds	5E+4	2E+4	7E-6	-	7E-4	7E-3
			-	Bone surf (3E+4)	-	4E-8	-	-
96	Curium-250	W, all compounds	4E-2	3E-4	1E-13	-	-	-
			Bone surf (6E-2)	Bone surf (5E-4)	-	8E-16	9E-10	9E-9
97	Berkelium-245	W, all compounds	2E+3	1E+3	5E-7	2E-9	3E-5	3E-4
97	Berkelium-246	W, all compounds	3E+3	3E+3	1E-6	4E-9	4E-5	4E-4
97	Berkelium-247	W, all compounds	5E-1	4E-3	2E-12	-	-	-
			Bone surf (1E+0)	Bone surf (9E-3)	-	1E-14	2E-8	2E-7
97	Berkelium-249	W, all compounds	2E+2	2E+0	7E-10	-	-	-
			Bone surf (5E+2)	Bone surf (4E+0)	-	5E-12	6E-6	6E-5
97	Berkelium-250	W, all compounds	9E+3	3E+2	1E-7	-	1E-4	1E-3
			-	Bone surf (7E+2)	-	1E-9	-	-
98	Californium-244[2]	W, all compounds except those given for Y	3E+4	6E+2	2E-7	8E-10	-	-
			St wall (3E+4)	-	-	-	4E-4	4E-3
		Y, oxides and hydroxides	-	6E+2	2E-7	8E-10	-	-
98	Californium-246	W, see ^{244}Cf	4E+2	9E+0	4E-9	1E-11	5E-6	5E-5
		Y, see ^{244}Cf	-	9E+0	4E-9	1E-11	-	-
98	Californium-248	W, see ^{244}Cf	8E+0	6E-2	3E-11	-	-	-
			Bone surf (2E+1)	Bone surf (1E-1)	-	2E-13	2E-7	2E-6
		Y, see ^{244}Cf	-	1E-1	4E-11	1E-13	-	-
98	Californium-249	W, see ^{244}Cf	5E-1	4E-3	2E-12	-	-	-
			Bone surf (1E+0)	Bone surf (9E-3)	-	1E-14	2E-8	2E-7
		Y, see ^{244}Cf	-	1E-2	4E-12	-	-	-
			-	Bone surf (1E-2)	-	2E-14	-	-
98	Californium-250	W, see ^{244}Cf	1E+0	9E-3	4E-12	-	-	-
			Bone surf (2E+0)	Bone surf (2E-2)	-	3E-14	3E-8	3E-7
		Y, see ^{244}Cf	-	3E-2	1E-11	4E-14	-	-

APPENDIX G TO RH-1000 THROUGH RH-2110
ANNUAL LIMITS ON INTAKE (ALIs) AND DERIVED AIR CONCENTRATIONS (DACs) OF RADIONUCLIDES FOR OCCUPATIONAL EXPOSURE; EFFLUENT CONCENTRATIONS; CONCENTRATIONS FOR RELEASE TO SEWERAGE

45

			Table 1 Occupational Values			Table 2 Effluent Concentrations		Table 3 Releases to Sewers
			Col. 1	Col. 2	Col. 3	Col. 1	Col. 2	
			Oral Ingestion	Inhalation				
Atomic No.	Radionuclide	Class	ALI (µCi)	ALI (µCi)	DAC (µCi/ml)	Air (µCi/ml)	Water (µCi/ml)	Monthly Average Concentration (µCi/ml)
		Y, see ^{244}Cf	-	3E-2	1E-11	4E-14	-	-
98	Californium-251	W, see ^{244}Cf	5E-1	4E-3	2E-12	-	-	-
			Bone surf (1E+0)	Bone surf (9E-3)	-	1E-14	2E-8	2E-7
		Y, see ^{244}Cf	-	1E-2	4E-12	-	-	-
			-	Bone surf (1E-2)	-	2E-14	-	-
98	Californium-252	W, see ^{244}Cf	2E+0	2E-2	8E-12	-	-	-
			Bone surf (5E+0)	Bone surf (4E-2)	-	5E-14	7E-8	7E-7
		Y, see ^{244}Cf	-	3E-2	1E-11	5E-14	-	-
98	Californium-253	W, see ^{244}Cf	2E+2	2E+0	8E-10	3E-12	-	-
			Bone surf (4E+2)	-	-	-	5E-6	5E-5
		Y, see ^{244}Cf	-	2E+0	7E-10	2E-12	-	-
98	Californium-254	W, see ^{244}Cf	2E+0	2E-2	9E-12	3E-14	3E-8	3E-7
		Y, see ^{244}Cf	-	2E-2	7E-12	2E-14	-	-
99	Einsteinium-250	W, all compounds	4E+4	5E+2	2E-7	-	6E-4	6E-3
			-	Bone surf (1E+3)	-	2E-9	-	-
99	Einsteinium-251	W, all compounds	7E+3	9E+2	4E-7	-	1E-4	1E-3
			-	Bone surf (1E+3)	-	2E-9	-	-
99	Einsteinium-253	W, all compounds	2E+2	1E+0	6E-10	2E-12	2E-6	2E-5
99	Einsteinium-254m	W, all compounds	3E+2	1E+1	4E-9	1E-11	-	-
			LLI wall (3E+2)	-	-	-	4E-6	4E-5
99	Einsteinium-254	W, all compounds	8E+0	7E-2	3E-11	-	-	-
			Bone surf (2E+1)	Bone surf (1E-1)	-	2E-13	2E-7	2E-6
100	Fermium-252	W, all compounds	5E+2	1E+1	5E-9	2E-11	6E-6	6E-5
100	Fermium-253	W, all compounds	1E+3	1E+1	4E-9	1E-11	1E-5	1E-4
100	Fermium-254	W, all compounds	3E+3	9E+1	4E-8	1E-10	4E-5	4E-4
100	Fermium-255	W, all compounds	5E+2	2E+1	9E-9	3E-11	7E-6	7E-5
100	Fermium-257	W, all compounds	2E+1	2E-1	7E-11	-	-	-
			Bone surf (4E+1)	Bone surf (2E-1)	-	3E-13	5E-7	5E-6
101	Mendelevium-257	W, all compounds	7E+3	8E+1	4E-8	-	1E-4	1E-3
			-	Bone surf (9E+1)	-	1E-10	-	-
101	Mendelevium-258	W, all compounds	3E+1	2E-1	1E-10	-	-	-
			Bone surf (5E+1)	Bone surf (3E-1)	-	5E-13	6E-7	6E-6

APPENDIX G TO RH-1000 THROUGH RH-2110
ANNUAL LIMITS ON INTAKE (ALIs) AND DERIVED AIR CONCENTRATIONS (DACs) OF RADIONUCLIDES FOR OCCUPATIONAL EXPOSURE; EFFLUENT CONCENTRATIONS; CONCENTRATIONS FOR RELEASE TO SEWERAGE

46

Atomic No.	Radionuclide	Class	Table 1 Occupational Values Col. 1 Oral Ingestion ALI (µCi)	Col. 2 Inhalation ALI (µCi)	Col. 3 Inhalation DAC (µCi/ml)	Table 2 Effluent Concentrations Col. 1 Air (µCi/ml)	Col. 2 Water (µCi/ml)	Table 3 Releases to Sewers Monthly Average Concentration (µCi/ml)
-	Any single radionuclide not listed above with decay mode other than alpha emission or spontaneous fission and with radioactive half-life less than 2 hours	Submersion[1]	-	2E+2	1E-7	1E-9	-	-
-	Any single radionuclide not listed above with decay mode other than alpha emission or spontaneous fission and with radioactive half-life greater than 2 hours	....	-	2E-1	1E-10	1E-12	1E-8	1E-7
-	Any single radionuclide not listed above that decays by alpha emission or spontaneous fission, or any mixture for which either the identity or the concentration of any radionuclide in the mixture is not known	....	-	4E-4	2E-13	1E-15	2E-9	2E-8

APPENDIX G TO RH-1000 THROUGH RH-2110
ANNUAL LIMITS ON INTAKE (ALIs) AND DERIVED AIR CONCENTRATIONS (DACs) OF RADIONUCLIDES FOR OCCUPATIONAL EXPOSURE; EFFLUENT CONCENTRATIONS; CONCENTRATIONS FOR RELEASE TO SEWERAGE

47

Atomic Radionuclide No.	Class	Table 1 Occupational Values			Table 2 Effluent Concentrations		Table 3 Releases to Sewers
		Col. 1 Oral Ingestion ALI (µCi)	Col. 2 Inhalation ALI (µCi)	Col. 3 Inhalation DAC (µCi/ml)	Col. 1 Air (µCi/ml)	Col. 2 Water (µCi/ml)	Monthly Average Concentration (µCi/ml)
If it is known that Ac-227-D and Cm-250-W are not present		-	7E-4	3E-13	-	-	-
If, in addition, it is known that Ac-227-W,Y, Th-229-W,Y, Th-230-W, Th-232-W,Y, Pa-231-W,Y, Np-237-W, Pu-239-W, Pu-240-W, Pu-242-W, Am-241-W, Am-242m-W, Am-243-W, Cm-245-W, Cm-246-W, Cm-247-W, Cm-248-W, Bk-247-W, Cf-249-W, and Cf-251-W are not present		-	7E-3	3E-12	-	-	-
If, in addition, it is known that Sm-146-W, Sm-147-W, Gd-148-D,W, Gd-152-D,W, Th-228-W,Y, Th-230-Y, U-232-Y, U-233-Y, U-234-Y, U-235-Y, U-236-Y, U-238-Y, Np-236-W, Pu-236-W,Y, Pu-238-W,Y, Pu-239-Y, Pu-240-Y, Pu-242-Y, Pu-244-W,Y, Cm-243-W, Cm-244-W, Cf-248-W, Cf-249-Y, Cf-250-W,Y, Cf-251-Y, Cf-252-W,Y, and Cf-254-W,Y are not present		-	7E-2	3E-11	-	-	-
If, in addition, it is known that Pb-210-D, Bi-210m-W, Po-210-D,W, Ra-223-W, Ra-225-W, Ra-226-W, Ac-225-D,W,Y, Th-227-W,Y, U-230-D,W,Y, U-232-D,W, Pu-241-W, Cm-240-W, Cm-242-W, Cf-248-Y, Es-254-W, Fm-257-W, and Md-258-W are not present		-	7E-1	3E-10	-	-	-
If, in addition, it is known that Si-32-Y, Ti-44-Y, Fe-60-D, Sr-90-Y, Zr-93-D, Cd-113m-D, Cd-113-D, In-115-D,W, La-138-D, Lu-176-W, Hf-178m-D,W, Hf-182-D,W, Bi-210m-D, Ra-224-W, Ra-228-W, Ac-226-D,W,Y, Pa-230-W,Y, U-233-D,W, U-234-D,W, U-235-D,W, U-236-D,W, U-238-D,W, Pu-241-Y, Bk-249-W, Cf-253-W,Y, and Es-253-W are not present		-	7E+0	3E-9	-	-	-
If it is known that Ac-227-D,W,Y, Th-229-W,Y, Th-232-W,Y, Pa-231-W,Y, Cm-248-W, and Cm-250-W are not present		-	-	-		1E-14	-
If, in addition, it is known that Sm-146-W, Gd-148-D,W, Gd-152-D, Th-228-W,Y, Th-230-W,Y, U-232-Y, U-233-Y, U-234-Y, U-235-Y, U-236-Y, U-238-Y, U-Nat-Y, Np-236-W, Np-237-W, Pu-236-W,Y, Pu-238-W,Y, Pu-239-W,Y, Pu-240-W,Y, Pu-242-W,Y, Pu-244-W,Y, Am-241-W, Am-242m-W, Am-243-W, Cm-243-W, Cm-244-W, Cm-245-W, Cm-246-W, Cm-247-W, Bk-247-W, Cf-249-W,Y, Cf-250-W,Y, Cf-251-W,Y, Cf-252-W,Y, and Cf-254-W,Y are not present		-	-	-	1E-13	-	-
If, in addition, it is known that Sm-147-W, Gd-152-W, Pb-210-D, Bi-210m-W, Po-210-D,W, Ra-223-W, Ra-225-W, Ra-226-W, Ac-225-D,W,Y, Th-227-W,Y, U-230-D,W,Y, U-232-D,W, U-Nat-W, Pu-241-W, Cm-240-W, Cm-242-W, Cf-248-W,Y, Es-254-W, Fm-257-W, and Md-258-W are not present			-	-	-	1E-12	-
If, in addition it is known that Fe-60, Sr-90, Cd-113m, Cd-113, In-115, I-129, Cs-134, Sm-145, Sm-147, Gd-148, Gd-152, Hg-194 (organic), Bi-210m, Ra-223, Ra-224, Ra-225, Ac-225, Th-228, Th-230, U-233, U-234, U-235, U-236, U-238, U-Nat, Cm-242, Cf-248, Es-254, Fm-257, and Md-258 are not present		-	-	-	-	1E-6	1E-5

FOOTNOTES:

[1] " Submersion" means that values given are for submersion in a hemispherical semi-infinite cloud of airborne material.

[2] These radionuclides have radiological half-lives of less than 2 hours. The total effective dose equivalent received during operations with these radionuclides might include a significant contribution from external exposure. The DAC values for all radionuclides, other than those designated Class "Submersion," are based upon the committed effective dose equivalent due to the intake of the radionuclide into the body and do NOT include potentially significant contributions to dose equivalent from external exposures. The licensee may substitute 1E-7 µCi/ml for the listed DAC to account for the submersion dose prospectively, but should use individual monitoring devices or other radiation measuring instruments that measure external exposure to demonstrate compliance with the limits. (See RH-1202)

[3] For soluble mixtures of U-238, U-234, and U-235 in air, chemical toxicity may be the limiting factor (See RH-1200). If the percent by weight (enrichment) of U-235 is not greater than 5, the concentration value for a 40-hour workweek is 0.2 milligrams uranium per cubic meter of air average. For any enrichment, the product of the average concentration and time of exposure during a 40-hour workweek shall not exceed 8E-3 (SA) µCi-hr/ml, where SA is the specific activity of the uranium inhaled. The specific activity for natural uranium is 6.77E-7 curies per gram U. The specific activity for other mixtures of U-238, U-235, and U-234, if not known, shall be:

SA = 3.6E-7 curies/gram U U-depleted

$SA = [0.4 + 0.38\ (\text{enrichment}) + 0.0034\ (\text{enrichment})^2]\ E\text{-}6$, enrichment > 0.72

where enrichment is the percentage by weight of U-235, expressed as percent.

NOTE:

1. If the identity of each radionuclide in a mixture is known but the concentration of one or more of the radionuclides in the mixture is not known, the DAC for the mixture shall be the most restrictive DAC of any radionuclide in the mixture.

2. If the identity of each radionuclide in the mixture is not known, but it is known that certain radionuclides specified in this appendix are not present in the mixture, the inhalation ALI, DAC, and effluent and sewage concentrations for the mixture are the lowest values specified in this appendix for any radionuclide that is not known to be absent from the mixture; or

3. If a mixture of radionuclides consists of uranium and its daughters in ore dust (10 µm AMAD particle distribution assumed) prior to chemical separation of the uranium from the ore, the following values may be used for the DAC of the mixture: 6E-11µCi of gross alpha activity from uranium-238, uranium-234, thorium-230, and radium-226 permilliliter of air; 3E-11 µCi of natural uranium per milliliter of air; or 45 micrograms of natural uranium per cubic meter of air.

4. If the identity and concentration of each radionuclide in a mixture are known, the limiting values should be derived as follows: determine, for each radionuclide in the mixture, the ratio between the concentration present in the mixture and the concentration otherwise established in Appendix E to RH-1000 to RH-2110 for the specific radionuclide when not in a mixture. The sum of such ratios for all of the radionuclides in the mixture may not exceed "1" (i.e., "unity").

Example: If radionuclides "A", "B", and "C" are present in concentrations CA, CB, and CC, and if the applicable DACs are DAC_A, DAC_B, and DAC_C, respectively, then the concentrations shall be limited so that the following relationship exists:

$$\frac{C_A}{DAC_A} + \frac{C_B}{DAC_B} + \frac{C_C}{DAC_C} \leq 1$$

RH-2793.

APPENDIX H TO RH-1000 THROUGH RH-2110
QUANTITIES[1] OF LICENSED MATERIAL REQUIRING LABELING

Radionuclide	Quantity (µCi)	Radionuclide	Quantity (µCi)
Hydrogen-3	1,000	Manganese- 51	1,000
Beryllium-7	1,000	Manganese-52m	1,000
Beryllium-10	1	Manganese-52	100
Carbon-11	1,000	Manganese-53	1,000
Carbon-14	1,000	Manganese-54	100
Fluorine-18	1,000	Manganese-56	1,000
Sodium-22	10	Iron-52	100
Sodium-24	100	Iron-55	100
Magnesium-28	100	Iron-59	10
Aluminum-26	10	Iron-60	1
Silicon-31	1,000	Cobalt-55	100
Silicon-32	1	Cobalt-56	10
Phosphorus-32	10	Cobalt-57	100
Phosphorus-33	100	Cobalt-58m	1,000
Sulfur-35	100	Cobalt-58	100
Chlorine-36	10	Cobalt-60m	1,000
Chlorine-38	1,000	Cobalt-60	1
Chlorine-39	1,000	Cobalt-61	1,000
Argon-39	1,000	Cobalt-62m	1,000
Argon-41	1,000	Nickel-56	100
Potassium-40	100	Nickel-57	100
Potassium-42	1,000	Nickel-59	100
Potassium-43	1,000	Nickel-63	100
Potassium-44	1,000	Nickel-65	1,000
Potassium-45	1,000	Nickel-66	10
Calcium-41	100	Copper-60	1,000
Calcium-45	100	Copper-61	1,000
Calcium-47	100	Copper-64	1,000
Scandium-43	1,000	Copper-67	1,000
Scandium-44m	100	Zinc-62	100
Scandium-44	100	Zinc-63	1,000
Scandium-46	10	Zinc-65	10
Scandium-47	100	Zinc-69m	100
Scandium-48	100	Zinc-69	1,000
Scandium-49	1,000	Zinc-71m	1,000
Titanium-44	1	Zinc-72	100
Titanium-45	1,000	Gallium-65	1,000
Vanadium-47	1,000	Gallium-66	100
Vanadium-48	100	Gallium-67	1,000
Vanadium-49	1,000	Gallium-68	1,000
Chromium-48	1,000	Gallium-70	1,000
Chromium-49	1,000	Gallium-72	100
Chromium-51	1,000	Gallium-73	1,000

m = metastable state

APPENDIX H TO RH-1000 THROUGH RH-2110 (Continued)
QUANTITIES[1] OF LICENSED MATERIAL REQUIRING LABELING

Radionuclide	Quantity (µCi)	Radionuclide	Quantity (µCi)
Germanium-66	1,000	Rubidium-79	1,000
Germanium-67	1,000	Rubidium- 81m	1,000
Germanium-68	10	Rubidium-81	1,000
Germanium-69	1,000	Rubidium-82m	1,000
Germanium-71	1,000	Rubidium-83	100
Germanium-75	1,000	Rubidium-84	100
Germanium-77	1,000	Rubidium-86	100
Germanium-78	1,000	Rubidium-87	100
Arsenic-69	1,000	Rubidium-88	1,000
Arsenic-70	1,000	Rubidium-89	1,000
Arsenic-71	100	Strontium-80	100
Arsenic-72	100	Strontium-81	1,000
Arsenic-73	100	Strontium-83	100
Arsenic-74	100	Strontium-85m	1,000
Arsenic-76	100	Strontium-85	100
Arsenic-77	100	Strontium-87m	1,000
Arsenic-78	1,000	Strontium- 89	10
Selenium-70	1,000	Strontium-90	0.1
Selenium-73m	1,000	Strontium-91	100
Selenium-73	100	Strontium-92	100
Selenium-75	100	Yttrium-86m	1,000
Selenium-79	100	Yttrium-86	100
Selenium-81m	1,000	Yttrium-87	100
Selenium-81	1,000	Yttrium-88	10
Selenium-83	1,000	Yttrium-90m	1,000
Bromine-74m	1,000	Yttrium-90	10
Bromine-74	1,000	Yttrium-91m	1,000
Bromine-75	1,000	Yttrium-91	10
Bromine-76	100	Yttrium-92	100
Bromine-77	1,000	Yttrium-93	100
Bromine-80m	1,000	Yttrium-94	1,000
Bromine-80	1,000	Yttrium-95	1,000
Bromine-82	100	Zirconium-86	100
Bromine-83	1,000	Zirconium-88	10
Bromine-84	1,000	Zirconium-89	100
Krypton-74	1,000	Zirconium-93	1
Krypton-76	1,000	Zirconium-95	10
Krypton-77	1,000	Zirconium-97	100
Krypton-79	1,000	Niobium-88	1,000
Krypton-81	1,000	Niobium-89m	
Krypton-83m	1,000	(66 min)	1,000
Krypton-85m	1,000	Niobium-89	
Krypton-85	1,000	(122 min)	1,000
Krypton-87	1,000	Niobium-90	100
Krypton-88	1,000	Niobium-93m	10

m = metastable state

APPENDIX H TO RH-1000 THROUGH RH-2110 (Continued)
QUANTITIES[1] OF LICENSED MATERIAL REQUIRING LABELING

Radionuclide	Quantity (µCi)	Radionuclide	Quantity (µCi)
Niobium-94	1	Silver-102	1,000
Niobium-95m	100	Silver-103	1,000
Niobium-95	100	Silver-104m	1,000
Niobium-96	100	Silver-104	1,000
Niobium-97	1,000	Silver-105	100
Niobium-98	1,000	Silver-106m	100
Molybdenum-90	100	Silver-106	1,000
Molybdenum-93m	100	Silver-108m	1
Molybdenum-93	10	Silver-110m	10
Molybdenum-99	100	Silver-111	100
Molybdenum-101	1,000	Silver-112	100
Technetium-93m	1,000	Silver-115	1,000
Technetium-93	1,000	Cadmium-104	1,000
Technetium-94m	1,000	Cadmium-107	1,000
Technetium-94	1,000	Cadmium-109	1
Technetium-96m	1,000	Cadmium-113m	0.1
Technetium-96	100	Cadmium-113	100
Technetium-97m	100	Cadmium-115m	10
Technetium-97	1,000	Cadmium-115	100
Technetium-98	10	Cadmium-117m	1,000
Technetium-99m	1,000	Cadmium-117	1,000
Technetium-99	100	Indium-109	1,000
Technetium-101	1,000	Indium-110m	
Technetium-104	1,000	(69.1m)	1,000
Ruthenium-94	1,000	Indium-110	
Ruthenium-97	1,000	(4.9h)	1,000
Ruthenium-103	100	Indium-111	100
Ruthenium-105	1,000	Indium-112	1,000
Ruthenium-106	1	Indium-113m	1,000
Rhodium-99m	1,000	Indium-114m	10
Rhodium-99	100	Indium-115m	1,000
Rhodium-100	100	Indium-115	100
Rhodium-101m	1,000	Indium-116m	1,000
Rhodium-101	10	Indium-117m	1,000
Rhodium-102m	10	Indium-117	1,000
Rhodium-102	10	Indium-119m	1,000
Rhodium-103m	1,000	Tin-110	100
Rhodium-105	100	Tin-111	1,000
Rhodium-106m	1,000	Tin-113	100
Rhodium-107	1,000	Tin-117m	100
Palladium-100	100	Tin-119m	100
Palladium-101	1,000	Tin-121m	100
Palladium-103	100	Tin-121	1,000
Palladium-107	10	Tin-123m	1,000
Palladium-109	100	Tin-123	10

m = metastable state

APPENDIX H TO RH-1000 THROUGH RH-2110 (Continued)
QUANTITIES[1] OF LICENSED MATERIAL REQUIRING LABELING

Radionuclide	Quantity (µCi)	Radionuclide	Quantity (µCi)
Tin-125	10	Iodine-120m	1,000
Tin-126	10	Iodine-120	100
Tin-127	1,000	Iodine-121	1,000
Tin-128	1,000	Iodine-123	100
Antimony-115	1,000	Iodine-124	10
Antimony-116m	1,000	Iodine-125	1
Antimony-116	1,000	Iodine-126	1
Antimony-117	1,000	Iodine-128	1,000
Antimony-118m	1,000	Iodine-129	1
Antimony-119	1,000	Iodine- 130	10
Antimony-120		Iodine-131	1
(16m)	1,000	Iodine-132m	100
Antimony-120		Iodine-132	100
(5.76d)	100	Iodine-133	10
Antimony-122	100	Iodine-134	1,000
Antimony-124m	1,000	Iodine-135	100
Antimony-124	10	Xenon-120	1,000
Antimony-125	100	Xenon-121	1,000
Antimony-126m	1,000	Xenon-122	1,000
Antimony-126	100	Xenon-123	1,000
Antimony-127	100	Xenon-125	1,000
Antimony-128		Xenon-127	1,000
(10.4m)	1,000	Xenon-129m	1,000
Antimony-128		Xenon-131m	1,000
(9.O1h)	100	Xenon-133m	1,000
Antimony-129	100	Xenon-133	1,000
Antimony-130	1,000	Xenon-135m	1,000
Antimony-131	1,000	Xenon-135	1,000
Tellurium-116	1,000	Xenon-138	1,000
Tellurium-121m	10	Cesium-125	1,000
Tellurium-121	100	Cesium-127	1,000
Tellurium-123m	10	Cesium-129	1,000
Tellurium-123	100	Cesium-130	1,000
Tellurium-125m	10	Cesium-131	1,000
Tellurium-127m	10	Cesium-132	100
Tellurium-127	1,000	Cesium-134m	1,000
Tellurium-129m	10	Cesium-134	10
Tellurium-129	1,000	Cesium-135m	1,000
Tellurium-131m	10	Cesium-135	100
Tellurium-131	100	Cesium-136	10
Tellurium-132	10	Cesium-137	10
Tellurium-133m	100	Cesium-138	1,000
Tellurium-133	1,000	Barium-126	1,000
Tellurium-134	1,000	Barium-128	100

m = metastable state

APPENDIX H TO RH-1000 THROUGH RH-2110 (Continued)
QUANTITIES[1] OF LICENSED MATERIAL REQUIRING LABELING

Radionuclide	Quantity (µCi)	Radionuclide	Quantity (µCi)
Barium-131m	1,000	Promethium-141	1,000
Barium-131	100	Promethium-143	100
Barium-133m	100	Promethium-144	10
Barium-133	100	Promethium-145	10
Barium-135m	100	Promethium-146	1
Barium-139	1,000	Promethium-147	10
Barium-140	100	Promethium-148m	10
Barium-141	1,000	Promethium-148	10
Barium-142	1,000	Promethium-149	100
Lanthanum-131	1,000	Promethium-150	1,000
Lanthanum-132	100	Promethium-151	100
Lanthanum-135	1,000	Samarium-141m	1,000
Lanthanum-137	10	Samarium-141	1,000
Lanthanum-138	100	Samarium-142	1,000
Lanthanum-140	100	Samarium-145	100
Lanthanum-141	100	Samarium-146	1
Lanthanum-142	1,000	Samarium-147	100
Lanthanum-143	1,000	Samarium-151	10
Cerium-134	100	Samarium-153	100
Cerium-135	100	Samarium-155	1,000
Cerium-137m	100	Samarium-156	1,000
Cerium-137	1,000	Europium-145	100
Cerium-139	100	Europium-146	100
Cerium-141	100	Europium-147	100
Cerium-143	100	Europium-148	10
Praseodymium-136	1,000	Europium-149	100
Praseodymium-137	1,000	Europium-150	
Praseodymium-138m	1,000	12.62h)	100
Praseodymium-139	1,000	Europium-150	
Praseodymium-142m	1,000	(34.2y)	1
Praseodymium-142	100	Europium-152m	100
Praseodymium-143	100	Europium-152	1
Praseodymium-144	1,000	Europium-154	1
Praseodymium-145	100	Europium-155	10
Praseodymium-147	1,000	Europium-156	100
Neodymium-136	1,000	Europium-157	100
Neodymium-138	100	Europium-158	1,000
Neodymium-139m	1,000	Gadolinium-145	1,000
Neodymium-139	1,000	Gadolinium-146	10
Neodymium-141	1,000	Gadolinium-147	100
Neodymium-147	100	Gadolinium-148	0.001
Neodymium-149	1,000	Gadolinium-149	100
Neodymium-151	1,000	Gadolinium-151	10

m = metastable state

APPENDIX H TO RH-1000 THROUGH RH-2110 (Continued)
QUANTITIES[1] OF LICENSED MATERIAL REQUIRING LABELING

Radionuclide	Quantity (µCi)	Radionuclide	Quantity (µCi)
Gadolinium-152	100	Praseodymium-145	100
Gadolinium-153	10	Praseodymium-147	1,000
Gadolinium-159	100	Neodymium-136	1,000
Terbium-147	1,000	Neodymium-138	100
Terbium-149	100	Neodymium-139m	1,000
Terbium-150	1,000	Neodymium-139	1,000
Terbium-151	100	Neodymium-141	1,000
Terbium-153	1,000	Neodymium-147	100
Terbium-154	100	Neodymium-149	1,000
Terbium-155	1,000	Neodymium-151	1,000
Terbium-156m		Promethium-141	1,000
(5.Oh)	1,000	Promethium-143	100
Terbium-156		Promethium-144	10
(24.4h)	1,000	Promethium-145	10
Terbium-156	100	Promethium-146	1
Terbium-157	10	Promethium-147	10
Terbium-158	1	Promethium-148m	10
Terbium-160	10	Promethium-148	10
Terbium-161	100	Promethium-149	100
Dysprosium-155	1,000	Promethium-150	1,000
Dysprosium-157	1,000	Promethium-151	100
Dysprosium-159	100	Samarium-141m	1,000
Dysprosium-165	1,000	Samarium-141	1,000
Lanthanum-140	100	Samarium-142	1,000
Lanthanum-141	100	Samarium-145	100
Lanthanum-142	1,000	Samarium-146	1
Lanthanum-143	1,000	Samarium-147	100
Cerium-134	100	Samarium-151	10
Cerium-135	100	Samarium-153	100
Cerium-137m	100	Samarium-155	1,000
Cerium-137	1,000	Samarium-156	1,000
Cerium-139	100	Europium-145	100
Cerium-141	100	Europium-146	100
Cerium-143	100	Europium-147	100
Cerium-144	1	Europium-148	10
Praseodymium-136	1,000	Europium-149	100
Praseodymium-137	1,000	Europium-150	
Praseodymium-138m	1,000	(12.62h)	100
Praseodymium-139	1,000	Europium-150	
Praseodymium-142m	1,000	(34.2y)	1
Praseodymium-142	100	Europium-152m	100
Praseodymium-143	100	Europium-152	1
Praseodymium-144	1,000	Europium-154	1

m = metastable state

RH-2793. (Cont'd)

APPENDIX H TO RH-1000 THROUGH RH-2110 (Continued)
QUANTITIES[1] OF LICENSED MATERIAL REQUIRING LABELING

Radionuclide	Quantity (µCi)	Radionuclide	Quantity (µCi)
Europium-155	10	Holmium-167	1,000
Europium-156	100	Erbium-161	1,000
Europium-157	100	Erbium-165	1,000
Europium-158	1,000	Erbium-169	100
Gadolinium-145	1,000	Erbium-171	100
Gadolinium-146	10	Erbium-172	100
Gadolinium-147	100	Thulium-162	1,000
Gadolinium-148	0.001	Thulium-166	100
Gadolinium-149	100	Thulium-167	100
Gadolinium-151	10	Thulium-170	10
Gadolinium-152	100	Thulium-171	10
Gadolinium-153	10	Thulium-172	100
Gadolinium-159	100	Thulium-173	100
Terbium-147	1,000	Thulium-175	1,000
Terbium-149	100	Ytterbium-162	1,000
Terbium-150	1,000	Ytterbium-166	100
Terbium-151	100	Ytterbium-167	1,000
Terbium-153	1,000	Ytterbium-169	100
Terbium-154	100	Ytterbium-175	100
Terbium-155	1,000	Ytterbium-177	1,000
Terbium-156m		Ytterbium-178	1,000
(5.Oh)	1,000	Lutetium-169	100
Terbium-156		Lutetium-170	100
(24.4h)	1,000	Lutetium-171	100
Terbium-156	100	Lutetium-172	100
Terbium-157	10	Lutetium-173	10
Terbium-158	1	Lutetium-174m	10
Terbium-160	10	Lutetium-174	10
Terbium-161	100	Lutetium-176m	1,000
Dysprosium-155	1,000	Lutetium-176	100
Dysprosium-157	1,000	Lutetium-177m	10
Dysprosium-159	100	Lutetium-177	100
Dysprosium-165	1,000	Lutetium-178m	1,000
Dysprosium-166	100	Lutetium-178	1,000
Holmium-155	1,000	Lutetium-179	1,000
Holmium-157	1,000	Hafnium-170	100
Holmium-159	1,000	Hafnium-172	1
Holmium-161	1,000	Hafnium-173	1,000
Holmium-162m	1,000	Hafnium-175	100
Holmium-162	1,000	Hafnium-177m	1,000
Holmium-164m	1,000	Hafnium-178m	0.1
Holmium-164	1,000	Hafnium-179m	10
Holmium-166m	1	Hafnium-180m	1,000
Holmium-166	100	Hafnium-181	10

m = metastable state

APPENDIX H TO RH-1000 THROUGH RH-2110 (Continued)
QUANTITIES[1] OF LICENSED MATERIAL REQUIRING LABELING

Radionuclide	Quantity (µCi)	Radionuclide	Quantity (µCi)
Hafnium-182m	1,000	Rhenium-189	100
Hafnium-182	0.1	Osmium-180	1,000
Hafnium-183	1,000	Osmium-181	1,000
Hafnium-184	100	Osmium-182	100
Tantalum-172	1,000	Osmium-185	100
Tantalum-173	1,000	Osmium-189m	1,000
Tantalum-174	1,000	Osmium-191m	1,000
Tantalum-175	1,000	Osmium-191	100
Tantalum-176	100	Osmium-193	100
Tantalum-177	1,000	Osmium-194	1
Tantalum-178	1,000	Iridium-182	1,000
Tantalum-179	100	Iridium-184	1,000
Tantalum-180m	1,000	Iridium-185	1,000
Tantalum-180	100	Iridium-186	100
Tantalum-182m	1,000	Iridium-187	1,000
Tantalum-182	10	Iridium-188	100
Tantalum-183	100	Iridium-189	100
Tantalum-184	100	Iridium-190m	1,000
Tantalum-185	1,000	Iridium-190	100
Tantalum-186	1,000	Iridium-192m	10
Tungsten-176	1,000	Iridium-192	1
Tungsten-177	1,000	Iridium-194m	10
Tungsten-178	1,000	Iridium-194	100
Tungsten-179	1,000	Iridium-195m	1,000
Tungsten-181	1,000	Iridium-195	1,000
Tungsten-185	100	Platinum-186	1,000
Tungsten-187	100	Platinum-188	100
Tungsten-188	10	Platinum-189	1,000
Rhenium-177	1,000	Platinum-191	100
Rhenium-178	1,000	Platinum-193m	100
Rhenium-181	1,000	Platinum-193	1,000
Rhenium-182 (12.7h)	1,000	Platinum-195m	100
		Platinum-197m	1,000
Rhenium-182 (64.Oh)	100	Platinum-197	100
		Platinum-199	1,000
Rhenium-184m	10	Platinum-200	100
Rhenium-184	100	Gold-193	1,000
Rhenium-186m	10	Gold-194	100
Rhenium-186	100	Gold-195	10
Rhenium-187	1,000	Gold-198m	100
Rhenium-188m	1,000	Gold-198	100
Rhenium-188	100	Gold-199	100

m = metastable state

APPENDIX H TO RH-1000 THROUGH RH-2110 (Continued)
QUANTITIES[1] OF LICENSED MATERIAL REQUIRING LABELING

Radionuclide	Quantity (µCi)	Radionuclide	Quantity (µCi)
Gold-200m	100	Bismuth-207	10
Gold-200	1,000	Bismuth-210m	0.1
Gold-201	1,000	Bismuth-210	1
Mercury-193m	100	Bismuth-212	10
Mercury-193	1,000	Bismuth-213	10
Mercury-194	1	Bismuth-214	100
Mercury-195m	100	Polonium-203	1,000
Mercury-195	1,000	Polonium-205	1,000
Mercury-197m	100	Polonium-207	1,000
Mercury-197	1,000	Polonium-210	0.1
Mercury-199m	1,000	Astatine-207	100
Mercury-203	100	Astatine-211	10
Thallium-194m	1,000	Radon-220	1
Thallium-194	1,000	Radon-222	1
Thallium-195	1,000	Francium-222	100
Thallium-197	1,000	Francium-223	100
Thallium-198m	1,000	Radium-223	0.1
Thallium-198	1,000	Radium-224	0.1
Thallium-199	1,000	Radium-225	0.1
Thallium-200	1,000	Radium-226	0.1
Thallium-201	1,000	Radium-227	1,000
Thallium-202	100	Radium-228	0.1
Thallium-204	100	Actinium-224	1
Lead-195m	1,000	Actinium-225	0.01
Lead-198	1,000	Actinium-226	0.1
Lead-199	1,000	Actinium-227	0.001
Lead-200	100	Actinium-228	1
Lead-201	1,000	Thorium-226	10
Lead-202m	1,000	Thorium-227	0.01
Lead-202	10	Thorium-228	0.001
Lead-203	1,000	Thorium-229	0.001
Lead-205	100	Thorium-230	0.001
Lead-209	1,000	Thorium-231	100
Lead-210	0.01	Thorium-232	100
Lead-211	100	Thorium-234	10
Lead-212	1	Thorium-natural	100
Lead-214	100	Protactinium-227	10
Bismuth-200	1,000	Protactinium-228	1
Bismuth-201	1,000	Protactinium-230	0.1
Bismuth-202	1,000	Protactinium-231	0.001
Bismuth-203	100	Protactinium-232	1
Bismuth-205	100	Protactinium-233	100
Bismuth-206	100	Protactinium-234	100

m = metastable state

APPENDIX H TO RH-1000 THROUGH RH-2110 (Continued)
QUANTITIES[1] OF LICENSED MATERIAL REQUIRING LABELING

Radionuclide	Quantity (µCi)	Radionuclide	Quantity (µCi)
Uranium-230	0.01	Americium-242m	0.001
Uranium-231	100	Americium-242	10
Uranium-232	0.001	Americium-243	0.001
Uranium-233	0.001	Americium-244m	100
Uranium-234	0.001	Americium-244	10
Uranium-235	0.001	Americium-245	1,000
Uranium-236	0.001	Americium-246m	1,000
Uranium-237	100	Americium-246	1,000
Uranium-238	100	Curium-238	100
Uranium-239	1,000	Curium-240	0.1
Uranium-240	100	Curium-241	1
Uranium-natural	100	Curium-242	0.01
Neptunium-232	100	Curium-243	0.001
Neptunium-233	1,000	Curium-244	0.001
Neptunium-234	100	Curium-245	0.001
Neptunium-235	100	Curium-246	0.001
Neptunium-236		Curium-247	0.001
(1.15x10y)	0.001	Curium-248	0.001
Neptunium-236		Curium-249	1,000
(22.5h)	1	Berkelium-245	100
Neptunium-237	0.001	Berkelium-246	100
Neptunium-238	10	Berkelium-247	0.001
Neptunium-239	100	Berkelium-249	0.1
Neptunium-240	1,000	Berkelium-250	10
Plutonium-234	10	Californium-244	100
Plutonium-235	1,000	Californium-246	1
Plutonium-236	0.001	Californium-248	0.01
Plutonium-237	100	Californium-249	0.001
Plutonium-238	0.001	Californium-250	0.001
Plutonium-239	0.001	Californium-251	0.001
Plutonium-240	0.001	Californium-252	0.001
Plutonium-241	0.01	Californium-253	0.1
Plutonium-242	0.001	Californium-254	0.001
Plutonium-243	1,000	Einsteinium-250	100
Plutonium-244	0.001	Einsteinium-251	100
Plutonium-245	100	Einsteinium-253	0.1
Americium-237	1,000	Einsteinium-254m	1
Americium-238	100	Einsteinium-254	0.01
Americium-239	1,000	Fermium-252	1
Americium-240	100	Fermium-253	1
Americium-241	0.001	Fermium-254	10

m = metastable state

APPENDIX H TO RH-1000 THROUGH RH-2110 (Continued)
QUANTITIES[1] OF LICENSED MATERIAL REQUIRING LABELING

Radionuclide	Quantity (µCi)	Radionuclide	Quantity (µCi)
Fermium-255	1		
Fermium-257	0.01		
Mendelevium-257	10		
Mendelevium-258	0.01		
Any radionuclide other than alpha emitting radionuclides not listed above, or mixtures of beta emitters of unknown composition	0.01		

m = metastable state

[1] The quantities listed above were derived by taking 1/10th of the most restrictive ALI listed in Table 1, Columns 1 and 2, of Appendix G to RH-1000 through RH-2110 of this Part, rounding to the nearest factor of 10, and arbitrarily constraining the values listed between 0.001 and 1,000 µCi. Values of 100 µCi have been assigned for radionuclides having a radioactive half-life in excess of 10^9 years (except Rhenium, 1000 µCi) to take into account their low specific activity.

NOTE: **For purposes of Part F and RH-1304, where there is involved a combination of radionuclides in known amounts, the limit for the combination should be derived as follows: Determine, for each radionuclide in the combination, the ratio between the quantity present in the combination and the limit otherwise established for the specific radionuclide when not in combination. The sum of such ratios for all radionuclides in the combination may not exceed "1" (i.e., "unity").**

RH-2794.

APPENDIX I

UNITED STATES NUCLEAR REGULATORY COMMISSION REGIONAL OFFICES

Region I: Connecticut, Delaware, District of Columbia, Maine, Maryland, Massachusetts, New Hampshire, New Jersey, New York, Pennsylvania, Rhode Island, and Vermont

Address: U.S. Nuclear Regulatory Commission, Region I
475 Allendale Road
King of Prussia, PA 19406-1415

Telephone: (800) 432-1156

Region II: Alabama, Florida, Georgia, Kentucky, Mississippi, North Carolina, Puerto Rico, South Carolina, Tennessee, Virginia, Virgin Islands, and West Virginia

Address: U.S. Nuclear Regulatory Commission, Region II
101 Marietta Street, Northwest, Suite 2900
Atlanta, GA 30323-0199

Telephone: (800) 577-8510

Region III: Illinois, Indiana, Iowa, Michigan, Minnesota, Missouri, Ohio, and Wisconsin

Address: U.S. Nuclear Regulatory Commission, Region III
801 Warrenville Road
Lisle, IL 60532-4351

Telephone: (800) 522-3025

***Region IV**: Alaska, Arizona, **ARKANSAS**, California, Colorado, Hawaii, Idaho, Kansas, Louisiana, Montana, Nebraska, Nevada, New Mexico, North Dakota, Oklahoma, Oregon, South Dakota, Texas, Utah, Washington, Wyoming, and U.S. territories and possessions in the Pacific

==> Region V was combined with Region IV <==

*Address: U.S. Nuclear Regulatory Commission, Region IV
611 Ryan Plaza Drive, Suite 400
Arlington, TX 76011-8064

*Telephone: (800) 952-9677

Walnut Creek Field Office: U.S. Nuclear Regulatory Commission
1450 Maria Lane
Walnut Creek, CA 94596-5368

Telephone: (800) 882-4672

Region V: ==> Region V was combined with Region IV <==

RH-2795.

APPENDIX J TO RH-1000 THROUGH RH-2110

REQUIREMENTS FOR LOW-LEVEL WASTE TRANSFER FOR DISPOSAL AT LAND DISPOSAL FACILITIES AND MANIFESTS

I. MANIFEST

The shipment manifest shall contain the name, address, and telephone number of the person generating the waste. The manifest shall also include the name, address, and telephone number or the name and EPA hazardous waste identification number of the person transporting the waste to the land disposal facility. The manifest must also indicate as completely as practicable: a physical description of the waste, the volume, radionuclide identity and quantity, the total radioactivity, and the principal chemical form. The solidification agent must be specified. Waste containing more than 0.1% chelating agents by weight must be identified and the weight percentage of the chelating agent estimated. Wastes classified as Class A, Class B, or Class C in RH-407 must be clearly identified as such in the manifest. The total quantity of the radionuclides H-3, C-14, Tc-99, and I-129 must be shown. The manifest required by this Paragraph may be shipping papers used to meet Department of Transportation or Environmental Protection Agency regulations or requirements of the receiver, provided all the required information is included. Copies of manifests required by this Section may be legible carbon copies or legible photocopies.

II. CERTIFICATION

The waste generator shall include in the shipment manifest a certification that the transported materials are properly classified, described, packaged, marked, and labeled and are in proper condition for transportation according to the applicable regulations of the Department of Transportation and the Department. An authorized representative of the waste generator shall sign and date the manifest.

III. CONTROL AND TRACKING

A. Any generating licensee who transfers radioactive waste to a land disposal facility or a licensed waste collector shall comply with the requirements in Paragraphs A.1 through 8 of this Section. Any generating licensee who transfers waste to a licensed waste processor who treats or repackages waste shall comply with the requirements of Paragraphs A.4 through 8 of this Section. A licensee shall:

1. Prepare all wastes so that the waste is classified according to RH-1400 and meets the waste characteristics requirements;

2. Label each package of waste to identify whether it is Class A waste, Class B waste, or Class C waste, in accordance with RH-1400;

3. Conduct a quality control program to ensure compliance with RH-1400; the program must include management evaluation of audits;

4. Prepare shipping manifests to meet the requirements of Sections I and II of this Appendix;

5. Forward a copy of the manifest to the intended recipient, at the time of shipment, or deliver to a collector at the time the waste is collected, obtaining acknowledgment of receipt in the form of a signed copy of the manifest or equivalent documentation from the collector;

6. Include one copy of the manifest with the shipment;

7. Retain a copy of the manifest and documentation of acknowledgment of receipt as the record of transfer of licensed material as required by RH-1400; and

8. For any shipments or any part of a shipment for which acknowledgment of receipt has not been received within the times set forth in this section, conduct an investigation in accordance with Paragraph E of this Appendix.

B. Any waste collector licensee who handles only prepackaged waste shall:

1. Acknowledge receipt of the waste from the generator within one week of receipt by returning a signed copy of the manifest or equivalent documentation;

2. Prepare a new manifest to reflect consolidated shipments; the new manifest shall serve as a listing or index for the detailed generator manifests. Copies of the generator manifests shall be a part of the new manifest. The waste collector may prepare a new manifest without attaching the generator manifests, provided the new manifest contains for each package the information specified in Section I of this Appendix. The collector licensee shall certify that nothing has been done to the waste that would invalidate the generator's certification;

3. Forward a copy of the new manifest to the land disposal facility operator at the time of shipment;

4. Include the new manifest with the shipment to the disposal site;

5. Retain a copy of the manifest and documentation of acknowledgment of receipt as the record of transfer of licensed material as required by RH-1401, and retain information from generator manifest until disposition is authorized by the Department; and

6. For any shipments or any part of a shipment for which acknowledgment of receipt is not received within the times set forth in this section, conduct an investigation in accordance with Paragraph E of this Section.

C. Any licensed waste processor who treats or repackages wastes shall:

1. Acknowledge receipt of the waste from the generator within one week of receipt by returning a signed copy of the manifest or equivalent documentation;

2. Prepare a new manifest that meets the requirements of Sections I and II of this Appendix. Preparation of the new manifest reflects that the processor is responsible for the waste;

3. Prepare all wastes so that the waste is classified according to RH-1401 and meets the waste characteristics requirements;

4. Label each package of waste to identify whether it is Class A waste, Class B waste, or Class C waste, in accordance with RH-1401;

5. Conduct a quality control program to ensure compliance with RH-1401. The program shall include management evaluation of audits;

6. Forward a copy of the new manifest to the disposal site operator or waste collector at the time of shipment, or deliver to a collector at the time the waste is collected, obtaining acknowledgment of receipt in the form of a signed copy of the manifest or equivalent documentation by the collector;

7. Include the new manifest with the shipment;

8. Retain copies of original manifests and new manifests and documentation of acknowledgment of receipt as the record of transfer of licensed material required by RH-1401; and

2795. (Cont'd)

9. For any shipment or part of a shipment for which acknowledgment is not received within the times set forth in this section, conduct an investigation in accordance with Paragraph E of this section.

D. The land disposal facility operator shall:

1. Acknowledge receipt of the waste within one week of receipt by returning a signed copy of the manifest or equivalent documentation to the shipper. The shipper to be notified is the licensee who last possessed the waste and transferred the waste to the operator. The returned copy of the manifest or equivalent documentation shall indicate any discrepancies between materials listed on the manifest and materials received;

2. Maintain copies of all completed manifests or equivalent documentation until the Department authorizes their disposition; and

3. Notify the shipper (i.e., the generator, the collector, or processor) and the Director of the Division of Radiation Control when any shipment or part of a shipment has not arrived within sixty (60) days after the advance manifest was received.

E. Any shipment or part of a shipment for which acknowledgment is not received within the times set forth in this section must:

1. Be investigated by the shipper if the shipper has not received notification or receipt within twenty (20) days after transfer; and

2. Be traced and reported. The investigation shall include tracing the shipment and filing a report with the Director of the Division of Radiation Control. Each licensee who conducts a trace investigation shall file a written report with the Director of the Division of Radiation Control within two weeks of completion of the investigation.

RH-2796.-
RH-2800. Reserved.

PART N.
NOTICES, INSTRUCTIONS AND REPORTS TO WORKERS, INSPECTIONS

RH-2801. Purpose and Scope.

This Part establishes requirements for notices, instructions and reports by licensees or registrants to individuals engaged in work under a license or registration; and options available to such individuals in connection with Department inspection of licensees or registrants to ascertain compliance with the provisions of the Act and the regulations, orders and licenses issued thereunder regarding radiological working conditions. The Regulations in this Part apply to all persons who receive, possess, use, own or transfer sources of radiation licensed by or registered with the Department pursuant to these Regulations in Section 1 and Section 2.

RH-2802. Posting of Notices to Workers.

a. Each licensee or registrant shall post current copies of the following documents:

1. A copy of these Regulations;

2. The license or certificate of registration, conditions or documents incorporated into the license by reference and amendments thereto;

3. The operating procedures applicable to work under the license or registration; and

4. Any notice of violation involving radiological working conditions or order issued pursuant to Section 5 and any response from the licensee or registrant.

b. If posting of a document specified in RH-2802.a.1, 2 or 3 is not practicable, the licensee or registrant may post a notice which describes the document and states where it may be examined.

c. Department Form RH-11 **"Notice to Employees"** shall be posted by each licensee or registrant wherever individuals work in or frequent any portion of a restricted area.

d. Documents, notices or forms posted pursuant to this Section shall appear in a sufficient number of places to permit individuals engaged in work under the license or registration to observe them on the way to or from any particular work location to which the document applies, shall be conspicuous, and shall be replaced if defaced or altered.

RH-2802. (Cont'd)

e. Department documents posted pursuant to RH-2802.a.4 shall be posted within two (2) working days after receipt of the documents from the Department; the licensee's or registrant's response, if any, shall be posted within two (2) working days after dispatch from the licensee or registrant. Such documents shall remain posted for a minimum of five (5) working days or until action correcting the violation has been completed, whichever is later.

RH-2803. Instructions to Workers.

a. All individuals working in or frequenting any portion of a restricted area:

1. Shall be kept informed of the storage, transfer or use of radioactive materials or of radiation in such portions of the restricted area;

2. Shall be instructed in the health protection problems associated with exposure to radiation and/or radioactive material in precautions or procedures to minimize exposure and the purposes and functions of protective devices employed;

3. Instructed in, and required to observe, to the extent within the worker's control, the applicable provisions of Department Regulations and licenses or registration for the protection of personnel from exposures to radiation or radioactive material;

4. Shall be instructed of their responsibility to report promptly to the licensee or registrant any condition which may lead to or cause a violation of Department Regulations and licenses or unnecessary exposure to radiation and/or radioactive material;

5. Shall be instructed in the appropriate response to warnings made in the event of any unusual occurrence or malfunction that may involve exposure to radiation and/or radioactive material; and

6. Shall be advised as to the radiation exposure reports which workers may request pursuant to RH-2804.

b. In determining those individuals subject to the requirements of RH-2303.a., licensees and registrants must take into consideration assigned activities during normal and abnormal situations involving exposure to radiation and/or radioactive material which can reasonably be expected to occur during the life of a licensed or registered facility. The extent of these instructions shall be commensurate with potential radiological health protection problems present in the work place.

RH-2804. Notifications and Reports to Individuals.

a. Radiation exposure data for an individual and the results of any measurements, analyses and calculations of radioactive material deposited or retained in the body of an individual shall be reported to the individual as specified in this Section. The information reported shall include data and results obtained pursuant to Department Regulations, orders or license conditions, as shown in records maintained by the licensee or registrant pursuant to Department Regulations. Each notification and report shall:

1. Be in writing;

2. Include appropriate identifying data such as the name of the licensee or registrant, the name of the individual, the individual's date of birth and the individual's social security number;

3. Include the individual's exposure information; and

4. Contain the following statement:

"This report is furnished to you under the provisions of Arkansas Department of Health Regulations entitled 'Standards for Protection Against Radiation.' You should preserve this report for further reference."

b. Each licensee or registrant shall advise each worker annually of the worker's exposure to radiation or radioactive material as shown in records maintained by the licensee or registrant pursuant to RH-1301. This annual notification shall be dated and signed by the worker. Copies of the notification shall be retained by the licensee or registrant for inspection by the Department.

c. At the request of a worker formerly engaged in work controlled by the licensee or the registrant, each licensee or registrant shall furnish to the worker a report of the worker's exposure to radiation or radioactive material. Such report shall:

1. Be furnished within thirty (30) days from the time the request is made or within thirty (30) days after the exposure of the individual has been determined by the licensee or registrant, whichever is later;

2. Cover, within the period of time specified in the request, each calendar year in which the worker's activities involved exposure to radiation from radioactive material licensed by, or radiation machines registered with the Department; and

3. Include the dates and locations of work under the license or registration in which the worker participated during this period.

d. Each licensee or registrant shall furnish to each worker a report of the worker's exposure to radiation or radioactive material upon termination of employment. Such report shall be furnished within thirty (30) days from the time of termination of employment or within thirty (30) days after the exposure of the individual has been determined by the licensee or registrant, whichever is later. The report shall cover each calendar year in which the worker's activities involved exposure to sources of radiation and shall include the dates and locations of work under the license or registration in which the worker participated.

e. At the request of a worker who is terminating employment with the licensee or registrant in work involving radiation dose, or of a worker who, while employed by another person, is terminating assignment to work involving radiation dose in the licensee's or registrant's facility to each such worker, or to the worker's designee, at termination, a written report regarding the radiation dose received by that worker from operations of the licensee or registrant during that specifically identified calendar year or fraction thereof, or provide a written estimate of that dose if the finally determined personnel monitoring results are not available at that time. Estimated doses shall be clearly indicated as such.

f. When a licensee or registrant is required pursuant to RH-1504 to report to the Department any exposure of an individual to radiation or radioactive material, the licensee or the registrant shall also provide the individual a report on his/her exposure data included therein. Such reports shall be transmitted at a time not later than the transmittal to the Department.

RH-2805. Presence of Representatives of Licensees or Registrants and Workers During Inspection.

a. Each licensee or registrant shall afford to the Department at all reasonable times opportunity to inspect materials, machines, activities, facilities, premises, and records pursuant to these Regulations.

b. During an inspection, Department inspectors may consult privately with workers as specified in RH-2806. The licensee or registrant may accompany Department inspectors during other phases of an inspection.

RH-2805. (Cont'd)

c. If, at the time of inspection, an individual has been authorized by the workers to represent them during Department inspections, the licensee or registrant shall notify the inspectors of such authorization and shall give the workers' representative an opportunity to accompany the inspectors during the inspection of physical working conditions.

d. Each workers' representative shall be routinely engaged in work under control of the licensee or registrant and shall have received instructions as specified in RH-2803.

e. Different representatives of licensees or registrants and workers may accompany the inspectors during different phases of an inspection if there is no resulting interference with the conduct of the inspections. However, only one workers' representative at a time may accompany the inspectors.

f. With the approval of the licensee or registrant and the workers' representative, an individual who is not routinely engaged in work under control of the licensee or registrant, for example, a consultant to the licensee or registrant or to the workers' representative, shall be afforded the opportunity to accompany Department inspectors during the inspection of physical working conditions.

g. Notwithstanding the other provisions of this Section, Department inspectors are authorized to refuse to permit accompaniment by any individual who deliberately interferes with a fair and orderly inspection. With regard to any area containing proprietary information, the workers' representative for that area shall be an individual previously authorized by the licensee or registrant to enter that area.

RH-2806. Consultation With Workers During Inspections.

a. Department inspectors may consult privately with workers concerning matters of occupational radiation protection and other matters related to applicable provisions of Department Regulations and licenses to the extent the inspectors deem necessary for the conduct of an effective and thorough inspection.

b. During the course of an inspection any worker may bring privately to the attention of the inspectors, either orally or in writing any past or present condition which he/she has reason to believe may have contributed to or caused any violation of the Act, these Regulations, or license condition, or any unnecessary exposure of an individual to radiation from licensed radioactive material or a registered radiation machine under the licensee's or registrant's control. Any such notice in writing shall comply with the requirements of RH-2807.a.

RH-2807. Requests by Workers for Inspections.

a. Any worker or representative of workers who believes that a violation of the Act, these Regulations or license conditions exists or has occurred in work under a license or registration with regard to radiological working conditions in which the worker is engaged, may request an inspection by giving notice of the alleged violation to the Department. Any such notice shall be in writing, shall set forth the specific grounds for the notice and shall be signed by the worker or representative of the workers. A copy shall be provided to the licensee or registrant by the Department no later than at the time of the inspection except that, upon the request of the worker giving such notice, his/her name and the name of individuals referred to therein shall not appear in such copy or on any record published, released or made available by the Department, except for good cause shown.

b. If, upon receipt of such notice, the Department determines that the complaint meets the requirements set forth in RH-2807.a, and that there are reasonable grounds to believe that the alleged violation exists or has occurred, an inspection shall be made as soon as practicable, to determine if such alleged violation exists or has occurred. Inspections pursuant to this Section need not be limited to matters referred to in the complaint

c. No licensee or registrant shall discharge or in any manner discriminate against any worker because such worker has filed complaint or instituted or caused to be instituted any proceeding under these Regulations or has testified or is about to testify in any such proceeding or because of the exercise by such worker on behalf of himself/herself or others of any option afforded by this Part.

RH-2808. Inspections Not Warranted; Informal Review.

a. If the Department determines, with respect to a complaint under RH-2807 that an inspection is not warranted because there are no reasonable grounds to believe that a violation exists or has occurred, the Department shall notify the complainant in writing of such determination.

1. The complainant may obtain review of such determination by submitting a written statement of position with the Director who will provide the licensee or registrant with a copy of such statement by certified mail, excluding, at the request of the complainant, the name of the complainant.

RH-2808. (Cont'd)

2. The licensee or registrant may submit an opposing written statement of position with the Director who will provide the complainant with a copy of such statement by certified mail.

3. Upon the request of the complainant, the Director may hold an informal conference in which the complainant and the licensee or registrant may orally present their views. An informal conference may also be held at the request of the licensee or registrant, but disclosure of the identity of the complainant will be made only following receipt of written authorization from the complainant.

4. After considering all written or oral views presented, the Director shall affirm, modify, or reverse the determination of the Department and furnish the complainant and the licensee or registrant a written notification of his/her decision and the reason therefore.

b. If the Director determines that an inspection is not warranted because the requirements of RH-2807.a have not been met, he/she shall notify the complainant in writing of such determination. Such determination shall be without prejudice to the filing of a new complaint meeting the requirements of RH-2807.a.

RH-2809.-
RH-2823. Reserved.

RH-2824.

NOTICE TO EMPLOYEES

Arkansas Department of Health
STANDARDS FOR PROTECTION AGAINST RADIATION

The Arkansas Department of Health (ADH) has adopted regulations with standards to protect you from hazards associated with radioactive materials and radiation emitting machines which are licensed or registered by ADH. In particular, the following information is available for your review:

Section 3: Standards for Protection Against Radiation
Part N: Notice, Instructions, and Reports to Workers
Any other documents your employer must provide, as noted below

These may be found at the following location:

YOUR EMPLOYER'S RESPONSIBILITY

Your employer is required to:

1. Comply with all applicable regulations and the conditions of the license or registration.
2. Post or otherwise make available to you a copy of the regulations, licenses, regulations, and operating procedures which apply to work in which you are engaged, and explain the provisions to you.

YOUR RESPONSIBILITY AS A WORKER

You should:

1. Know the provisions of the ADH regulations, the precautions, the operating procedures, and the emergency procedures which apply to your work.
2. Observe the provisions for your own protection and for the protection of your co-workers.
3. Report unsafe working conditions or violations of the license or registration conditions, or regulations to ADH.

REPORTS ON YOUR RADIATION EXPOSURE HISTORY

1. The ADH regulations specify the occupational limits for radiation exposure including concentrations of radioactive material in air and water. These regulations require your employer to give you a written report if you receive an exposure in excess of any applicable limit. The limits on your exposure are contained in RH-1200, RH-1206, and RH-1207. While these are the maximum allowable limits, your employer should keep your radiation exposure below those limits as is reasonably achievable.
2. If you work where personnel monitoring is required and request information on your radiation exposures,
   a. your employer must advise you annually of your exposure to radiation, and
   b. upon termination of employment, your employer must give you a written report of your radiation exposures. A report of any exposure in excess of a limit must be reported to you.

INSPECTIONS: All licensed or registered activities are subject to inspection by the ADH.

INQUIRIES

Direct all inquiries on matters outlined above to: Radiation Control, Arkansas Department of Health, 4815 West Markham, Mail Slot #30, Little Rock, AR 72205-3867; (501) 661-2301 Emergencies only (800) 633-1735

POSTING REQUIREMENT: Copies of this notice must be posted in every establishment where employees are engaged in activities licensed or registered by the ADH. Posting must permit employees working in or frequenting any portion of a restricted area to observe a copy on the way to or from their place of employment.

ARKANSAS DEPARTMENT OF HEALTH FORM Y

(AGENCY)

OCCUPATIONAL EXPOSURE RECORD FOR A MONITORING PERIOD

1. NAME (LAST, FIRST, MIDDLE INITIAL)	2. IDENTIFICATION NUMBER	3. ID TYPE	4. SEX ☐ MALE ☐ FEMALE	5. DATE OF BIRTH

6. MONITORING PERIOD	7. LICENSEE OR REGISTRANT NAME	8. LICENSE OR REGISTRATION NUMBER(S)	9A. ☐ RECORD ☐ ESTIMATE	9B. ☐ ROUTINE ☐ PSE

INTAKES

10A. RADIONUCLIDE	10B. CLASS	10C. MODE	10D. INTAKE IN μCi

DOSES (In rem)

DEEP DOSE EQUIVALENT	(DDE)	11.
EYE DOSE EQUIVALENT TO THE LENS OF THE EYE	(LDE)	12.
SHALLOW DOSE EQUIVALENT, WHOLE BODY	(SDE,WB)	13.
SHALLOW DOSE EQUIVALENT, MAX EXTREMITY	(SDE,ME)	14.
COMMITTED EFFECTIVE DOSE EQUIVALENT	(CEDE)	15.
COMMITTED DOSE EQUIVALENT, MAXIMALLY EXPOSED ORGAN	(CDE)	16.
TOTAL EFFECTIVE DOSE EQUIVALENT *(BLOCKS 11 + 15)*	*(TEDE)*	17.
TOTAL ORGAN DOSE EQUIVALENT, MAX ORGAN *(BLOCKS 11 + 16)*	*(TODE)*	18.

19. COMMENTS

20. SIGNATURE -- LICENSEE OR REGISTRANT	21. DATE PREPARED

RH-2825

INSTRUCTIONS AND ADDITIONAL INFORMATION PERTINENT TO THE COMPLETION OF ARKANSAS DEPT OF HEALTH FORM Y

(All doses should be stated in rems)

1. Type or print the full name of the monitored individual in the order of last name (include "Jr," "Sr," "III," etc.), first name, middle initial (if applicable).

2. Enter the individual's identification number, including punctuation. This number should be the 9-digit social security number if at all possible. If the individual has no social security number, enter the number from another official identification such as a passport or work permit.

3. Enter the code for the type of identification used as shown below:

CODE	ID TYPE
SSN	U.S. Social Security Number
PPN	Passport Number
CSI	Canadian Social Insurance Number
WPN	Work Permit Number
IND	INDEX Identification Number
OTH	Other

4. Check the box that denotes the sex of the individual being monitored.

5. Enter the date of birth of the individual being monitored in the format MM/DD/YY.

6. Enter the monitoring period for which this report is filed. The format should be MM/DD/YY - MM/DD/YY.

7. Enter the name of the licensee or registrant.

8. Enter the Agency license or registration number or numbers.

9A. Place an "X" in Record or Estimate. Choose "Record" if the dose data listed represent a final determination of the dose received to the best of the licensee's or registrant's knowledge. Choose "Estimate" only if the listed dose data are preliminary and will be superseded by a final determination resulting in a subsequent report. An example of such an instance would be dose data based on self-reading dosimeter results and the licensee intends to assign the record dose on the basis of TLD results that are not yet available.

9B. Place an "X" in either Routine or PSE. Choose "Routine" if the data represent the results of monitoring for routine exposures. Choose "PSE" if the listed dose data represents the results of monitoring of planned special exposures received during the monitoring period. If more than one PSE was received in a single year, the licensee or registrant should sum them and report the total of all PSEs.

10A. Enter the symbol for each radionuclide that resulted in an internal exposure recorded for the individual, using the format "Xx-888x," for instance, Co-137 or Tc-99m.

10B. Enter the lung clearance class as listed in Appendix G Sec 3 (D, W, Y, V, or O for other) for all intakes by inhalation.

10C. Enter the mode of intake. For inhalation, enter "H." For absorption through the skin, enter "B." For oral ingestion, enter "G." For injection, enter "J."

10D. Enter the intake of each radionuclide in μCi.

11. Enter the deep dose equivalent (DDE) to the whole body.

12. Enter the eye dose equivalent (LDE) recorded for the lens of the eye.

13. Enter the shallow dose equivalent recorded for the skin of the whole body (SDE,WB).

14. Enter the shallow dose equivalent recorded for the skin of the extremity receiving the maximum dose (SDE,ME).

15. Enter the committed effective dose equivalent (CEDE) or "NR" for "Not Required" or "NC" for "Not Calculated".

16. Enter the committed dose equivalent (CDE) recorded for the maximally exposed organ or "NR" for "Not Required" or "NC" for "Not Calculated".

17. Enter the total effective dose equivalent (TEDE). The TEDE is the sum of items 11 and 15.

18. Enter the total organ dose equivalent (TODE) for the maximally exposed organ. The TODE is the sum of items 11 and 16.

19. Signature of the person designated to represent the licensee or registrant.

20. Enter the date this form was prepared.

21. COMMENTS.
In the space provided, enter additional information that might be needed to determine compliance with limits. An example might be to enter the note that the SDE,ME was the result of exposure from a discrete hot particle. Another possibility would be to indicate that an overexposed report has been sent to the Agency in reference to the exposure report.

RH-2825.

ARKANSAS DEPARTMENT OF HEALTH FORM Z

(AGENCY)

CUMULATIVE OCCUPATIONAL EXPOSURE HISTORY

1. NAME (LAST, FIRST, MIDDLE INITIAL)		2. IDENTIFICATION NUMBER		3. ID TYPE	4. SEX: MALE / FEMALE	5. DATE OF BIRTH
6. MONITORING PERIOD		7. LICENSEE OR REGISTRANT NAME		8. LICENSE OR REGISTRATION NUMBER	9. RECORD / ESTIMATE / NO RECORD	10. ROUTINE / PSE
11. DDE	12. LDE	13. SDE, WB	14. SDE, ME	15. CEDE	16. CDE	17. TEDE / 18. TODE
6. MONITORING PERIOD		7. LICENSEE OR REGISTRANT NAME		8. LICENSE OR REGISTRATION NUMBER	9. RECORD / ESTIMATE / NO RECORD	10. ROUTINE / PSE
11. DDE	12. LDE	13. SDE, WB	14. SDE, ME	15. CEDE	16. CDE	17. TEDE / 18. TODE
6. MONITORING PERIOD		7. LICENSEE OR REGISTRANT NAME		8. LICENSE OR REGISTRATION NUMBER	9. RECORD / ESTIMATE / NO RECORD	10. ROUTINE / PSE
11. DDE	12. LDE	13. SDE, WB	14. SDE, ME	15. CEDE	16. CDE	17. TEDE / 18. TODE
6. MONITORING PERIOD		7. LICENSEE OR REGISTRANT NAME		8. LICENSE OR REGISTRATION NUMBER	9. RECORD / ESTIMATE / NO RECORD	10. ROUTINE / PSE
11. DDE	12. LDE	13. SDE, WB	14. SDE, ME	15. CEDE	16. CDE	17. TEDE / 18. TODE
6. MONITORING PERIOD		7. LICENSEE OR REGISTRANT NAME		8. LICENSE OR REGISTRATION NUMBER	9. RECORD / ESTIMATE / NO RECORD	10. ROUTINE / PSE
11. DDE	12. LDE	13. SDE, WB	14. SDE, ME	15. CEDE	16. CDE	17. TEDE / 18. TODE
19. SIGNATURE OF MONITORED INDIVIDUAL		20. DATE SIGNED	21. CERTIFYING ORGANIZATION		22. SIGNATURE OF DESIGNEE	23. DATE SIGNED

RH-1 rev 1/94

RH-2826.

INSTRUCTIONS AND ADDITIONAL INFORMATION PERTINENT TO THE COMPLETION OF ARKANSAS DEPT OF HEALTH FORM Z

(All doses should be stated in rems)

1. Type or print the full name of the monitored individual in the order of last name (include "Jr," "Sr," "III," etc.), first name, middle initial (if applicable).

2. Enter the individual's identification number, including punctuation. This number should be the 9-digit social security number if at all possible. If the individual has no social security number, enter the number from another official identification such as a passport or work permit.

3. Enter the code for the type of identification used as shown below:

CODE	ID TYPE
SSN	U.S. Social Security Number
PPN	Passport Number
CSI	Canadian Social Insurance Number
WPN	Work Permit Number
NID	NDEX Identification Number
OTH	Other

4. Check the box that denotes the sex of the individual being monitored.

5. Enter the date of birth of the individual being monitored in the format MM/DD/YY.

6. Enter the monitoring period for which this report is filed. The format should be MM/DD/YY - MM/DD/YY.

7. Enter the name of the licensee, registrant, or facility not licensed by the Agency that provided monitoring.

8. Enter the Agency license or registration number or numbers.

9. Place an "X" in Record, Estimate, or No Record. Choose "Record" if the dose data listed represent a final determination of the dose received to the best of the licensee's or registrant's knowledge. Choose "Estimate" only if the listed dose data are preliminary and will be superseded by a final determination resulting in a subsequent report. An example of such an instance would be dose data based on self-reading dosimeter results and the licensee or registrant intends to assign the record dose on the basis of TLD results that are not yet available.

10. Place an "X" in either Routine or PSE. Choose "Routine" if the data represent the results of monitoring for routine exposures. Choose "PSE" if the listed dose data represents the results of monitoring of planned special exposures received during the monitoring period. If more than one PSE was received in a single year, the licensee should sum them and report the total of all PSEs.

11. Enter the deep dose equivalent (DDE) to the whole body.

12. Enter the eye dose equivalent (LDE) recorded for the lens of the eye.

13. Enter the shallow dose equivalent recorded for the skin of the whole body (SDE,WB).

14. Enter the shallow dose equivalent recorded for the skin of the extremity receiving the maximum dose (SDE,ME).

15. Enter the committed effective dose equivalent (CEDE).

16. Enter the committed dose equivalent (CDE) recorded for the maximally exposed organ.

17. Enter the total effective dose equivalent (TEDE). The TEDE is the sum of items 11 and 15.

18. Enter the total organ dose equivalent (TODE) for the maximally exposed organ. The TODE is the sum of items 11 and 16.

19. Signature of the monitored individual. The signature of the monitored individual on this form indicates that the information contained on the form is complete and correct to the best of his or her knowledge.

20. Enter the date this form was signed by the monitored individual.

21. (OPTIONAL) Enter the name of the licensee, registrant or facility not licensed by the Agency, providing monitoring for exposure to radiation (such as a DOE facility) or the employer if the individual is not employed by the licensee or registrant and the employer chooses to maintain exposure records for its employees.

22. (OPTIONAL) Signature of the person designated to represent the licensee, registrant or employer entered in item 21. The licensee, registrant or employer who chooses to countersign the form should have on file documentation of all the information on the Agency Form Y being signed.

23. (OPTIONAL) Enter the date this form was signed by the designated representative.

RH-2826.

RH-2827.- RH-2899. Reserved.

PART O.
RADIATION SAFETY REQUIREMENTS FOR ANALYTICAL X-RAY EQUIPMENT

RH-2900. Scope and Purpose. This Part provides special requirements for analytical x-ray equipment. The requirements of this Part are in addition to, and not in substitution for applicable requirements in other parts of these Regulations.

RH-2901. Definitions.

a. Analytical x-ray equipment - X-Ray equipment used for x-ray diffraction fluorescence analysis or spectroscopy.

b. Analytical x-ray system - A group of local and remote components utilizing x-rays to determine the elemental composition or to examine the microstructure of materials. Local components include those that are struck by x-rays such as radiation source housings, port and shutter assemblies, collimators, sample holders, cameras, goniometers, detectors and shielding. Remote components include power supplies, transformers, amplifiers, readout devices, and control panels.

c. Fail-safe characteristics - A design feature which causes beam port shutters to close or otherwise prevents emergence of the primary beam, upon the failure of a safety or warning device.

d. Local components - Part of an analytical x-ray system and include areas exposed to x-rays, such as radiation source housings, port and shutter assemblies, collimators, sample holders, cameras, goniometers, detectors and shielding but does not include power supplies, transformers, amplifiers, readout devices and control panels.

e. Normal operating procedures - Operating procedures for conditions suitable for analytical purposes with shielding and barriers in place. These do not include maintenance but do include routine alignment procedures. Routine and emergency radiation safety considerations are part of these procedures.

f. Open-beam configuration - An analytical x-ray system in which an individual could accidentally place some part of his/her body in the primary beam path during normal operation.

g. Primary beam - Ionizing radiation which passes through an aperture of the source housing by a direct path from the x-ray tube located in the radiation source housing.

RH-2902. Equipment Requirements.

a. Safety device. A device which prevents the entry of any portion of an individual's body into the primary x-ray beam path or which causes the beam to be shut off upon entry into its path shall be provided on all open-beam configurations. A registrant may apply to the Department for an exemption from the requirement of a safety device. Such application shall include:

1. A description of the various safety devices that have been evaluated;

2. The reason each of these devices cannot be used; and

3. A description of the alternative methods that will be employed to minimize the possibility of an accidental exposure, including procedures to assure that operators and others in the area will be informed of the absence of safety devices.

b. Warning devices.

1. Open-beam configurations shall be provided with a readily discernible indication of:

A. X-ray tube status **(ON-OFF)** located near the radiation source housing, if the primary beam is controlled in this manner and/or

B. Shutter status **(OPEN-CLOSED)** located near each port on the radiation source housings, if the primary beam is controlled in this manner.

2. Warning devices shall be labeled so that their purpose is easily identified. On equipment installed after January 1, 1979, warning devices shall have fail-safe characteristics.

c. Ports. Unused ports on radiation machine source housings shall be secured in the closed position in a manner which will prevent casual opening.

d. Labeling. All analytical x-ray equipment shall be labeled with a readily discernible sign or signs bearing the radiation symbol and the words:

1. **"CAUTION - HIGH INTENSITY X-RAY BEAM",**

or words having a similar intent, on the x-ray source housing; and

2. **"CAUTION RADIATION - THIS EQUIPMENT PRODUCES RADIATION WHEN ENERGIZED,"**

or words having a similar intent, near any switch that energizes an x-ray tube.

RH-2902. (Cont'd)

e. Shutters. On open-beam configurations installed after January 1, 1979, each port on the radiation source housing shall be equipped with a shutter that cannot be opened unless a collimator or a coupling has been connected to the port.

f. Warning lights.

1. An easily visible warning light labeled with the words **"X-RAY ON,"** or words having a similar intent, shall be located near any switch that energizes an x-ray tube and shall be illuminated only when the tube is energized.

2. On equipment installed after January 1, 1979, warning lights shall have fail-safe characteristics.

g. Radiation source housing. Each radiation source housing shall be subject to the following requirements:

1. Each x-ray tube housing shall be equipped with an interlock that shuts off the tube if it is removed from the radiation source housing or if the housing is disassembled.

h. Generator cabinet. Each x-ray generator shall be supplied with a protective cabinet which limits leakage radiation measured at a distance of 5 centimeters from its surface such that it is not capable of producing a dose in excess of 0.25 millirem in one hour.

RH-2903. Area Requirements.

a. Radiation levels. The local components of an analytical x-ray system shall be located and arranged and shall include sufficient shielding or access control such that no radiation levels exist in any area surrounding the local component group which could result in a dose to an individual present therein in excess of the dose limits given in RH-1208. These levels shall be met at any specified tube rating.

b. Surveys.

1. Radiation surveys, as required by RH-1300, of all analytical x-ray systems sufficient to show compliance with RH-2903.a shall be performed:

A. Upon installation of the equipment;

B. Following any change in the initial arrangement, number or type of local components in the system;

RH-2903. (Cont'd)

C. Following any maintenance requiring the disassembly or removal of a local component in the system;

D. During the performance of maintenance and alignment procedures if the procedures require the presence of a primary x-ray beam when any local component in the system is disassembled or removed;

E. Any time a visual inspection of the local components in the system reveals an abnormal condition; and

F. Whenever personnel monitoring devices show a significant increase over the previous monitoring period or the readings are approaching the limits specified in RH-1200.

2. Radiation survey measurements shall not be required if a registrant can demonstrate compliance to the satisfaction of the Department with RH-2903.a in some other manner.

c. Posting. Each area or room containing analytical x-ray equipment shall be conspicuously posted with a sign or signs bearing the radiation symbol and the words

"CAUTION - X-RAY EQUIPMENT,"

or words having a similar intent.

RH-2904. Operating Requirements.

a. Procedures. Normal operating procedures shall be written and available to all analytical x-ray equipment workers. No person shall be permitted to operate analytical x-ray equipment in any manner other than that specified in the procedures unless such person has obtained written approval of the radiation safety officer.

b. Bypassing. No person shall bypass a safety device unless such person has obtained the approval of the Radiation Safety Officer. When a safety device has been bypassed, a readily discernible sign bearing the words

"SAFETY DEVICE NOT WORKING,"

or words having a similar intent, shall be placed on the radiation source housing.

RH-2904. (Cont'd)

c. Repair or modification of x-ray tube systems. Except as specified in RH-2904.b no operation involving removal of covers, shielding materials or tube housings or modifications to shutters, collimators or beam stops shall be performed without ascertaining that the tube is off and will remain off until safe conditions have been restored. The main switch, rather than interlocks, shall be used for routine shutdown in preparation for repairs.

RH-2905. Personnel Requirements.

a. Instruction.

1. No person shall be permitted to operate or maintain analytical x-ray equipment unless such person has received instruction in and demonstrated competence as to:

A. Identification of radiation hazards associated with the use of the equipment;

B. Significance of the various radiation warning and safety devices incorporated into the equipment or the reasons they have not been installed on certain pieces of equipment and the extra precautions required in such cases;

C. Proper operating procedures for the equipment;

D. Symptoms of an acute localized exposure; and

E. Proper procedures for reporting an actual or suspected exposure.

b. Personnel monitoring.

1. Finger or wrist dosimetric devices shall be provided to and shall be used by:

A. Analytical x-ray equipment workers using systems having an open-beam configuration and not equipped with a safety device; and

B. Personnel maintaining analytical x-ray equipment if the maintenance procedures require the presence of a primary x-ray beam when any local component in the analytical x-ray system is disassembled or removed.

2. Reported dose values shall not be used for the purpose of determining compliance with RH-1200 and RH-1208 unless evaluated by a qualified expert.

RH-2906.- RH-2999. Reserved.

FOOTNOTES TO SECTION 3

1/ An organ or tissue is deemed to be significantly irradiated if, for that organ or tissue, the product of the weighting factors, W_T, and the committed dose equivalent, H_{T50}, per unit intake is greater than ten (10%) percent of the maximum weighted value of H_{T50} (i.e., $W_T H_{50,T}$) per unit intake for any organ or tissue. H_{T50} was H_{50}

2/ This Section applies to radiation from byproduct, source, or special nuclear materials that are used in sealed sources in non-self-shielded irradiators. This Section does not apply to radioactive sources that are used in teletherapy, in radiography, or in completely self-shielded irradiators in which the source is both stored and operated within the same shielding radiation barrier and, in the designed configuration of the create high levels of radiation in an area that is accessible to any individual. This Section also does not apply to sources from which the radiation is incidental to some other use or to nuclear reactor-generated radiation.

3/ As appropriate, the information will include radiation levels, kinds of material, estimate of activity, date for which activity is estimated, etc.

4/ Labeling of packages containing radioactive materials is required by the Department of Transportation (DOT) if the amount and type of radioactive material exceeds the limits for an excepted quantity or article as defined and limited by DOT regulations 49 CFR 173.403(m) and (w) and 173.421-424.

5/ For example, containers in locations such as water-filled canals, storage vaults, or hot cells.

6/ Licensees are not required to reevaluate the separate external dose equivalents and internal committed dose equivalents or intakes of radionuclides assessed under RH-102 through RH-1308. Further, occupational exposure histories obtained and recorded on Department Form Z before January 1, 1994, would not have included effective dose equivalent, but may be used in the absence of specific information on the intake of radionuclides by the individual.

7/ Assessments of dose equivalent and records made using units in effect before the licensee's adoption of this Part need not be changed.

8/ A previous RH-407 permitted burial of small quantities of licensed materials in soil before January 28, 1981, without specific Department authorization.

9/ With respect to the limit for the embryo/fetus (RH01027), the identifiers should be those of the declared pregnant woman.

10/ If, because of the patient's condition, a delay in order to provide a written revision to an existing written directive would jeopardize the patient's health, an oral revision to an existing written directive will be acceptable, provided that the oral revision is documented immediately in the patient's record and a revised written directive is signed by the authorized user within 48 hours of the oral revision.

Also, a written revision to an existing written directive may be made for any diagnostic or therapeutic procedure provided that the revision is dated and signed by an authorized user prior to the administration of the radiopharmaceutical dosage, the brachytherapy dose, the gamma stereotactic radiosurgery dose, the teletherapy dose, or the next teletherapy fractional dose.

If, because of the emergent nature of the patient's condition, a delay in order to provide a written directive would jeopardize the patient's health, an oral directive will be acceptable, provided that the information contained in the oral directive is documented immediately in the patient's record and a written directive is prepared within 24 hours of the oral directive.

11/ The nominal chemical composition of type 1100 aluminum alloy is 99.00 percent (99%) minimum aluminum, 0.12 percent copper.

12/ The radiation detectors specified in RH-1608.b.6 may form part of this system.

13/ The calibration protocol published by the AAPM is accepted as an established protocol. Other protocols which are equivalent will be accepted, but the user should submit that protocol to the Department for concurrence that the protocol is equivalent.

14/ An example of a suggested plaque is shown in this Part.

15/ Appropriate warnings may include:

a. "Do not drill below plug back depth";

b. "Do not enlarge casing"; or

c. "Do not re-enter the hole", followed by the words, "before contacting the Arkansas Department of Health."

16/ Soluble (S); Insoluble (I)

17/ "Sub" means that values given are for submersion in a semi-spherical infinite cloud of airborne material.

18/ For purposes of these Regulations, it may be assumed that the daughter activity concentrations in the following table are equivalent to an air concentration of 10-7 microcuries of Radon-222 per milliliter of air in equilibrium with the daughters RaA, RaB, RaC and RaC'.

18a/ The duration of sample collection and the duration of measurement should be sufficiently short compared to the time between collection and measurement, as not to have a statistically significant effect upon the results.

19/ For soluble mixtures of U-238, U-234 and U-235 in air, chemical toxicity may be the limiting factor. If the percent by weight (enrichment) of U-235 is less than 5, the concentration value for a 40-hour workweek, Table I, is 0.2 milligrams Uranium per cubic meter or air average. For any enrichment, the product of the average of concentration and time of exposure during a 40-hour workweek shall not exceed 8×10^{-3} SA µCi-hr/ml, where SA is the specific activity of the Uranium inhaled. The concentration value for Table II is 0.007 milligrams Uranium per cubic meter of air. The specific activity for natural Uranium is 6.77×10^{-7} curies per gram U. The specific activity for other mixtures of U-238, U-235 and U-234, if not known, shall be:

$SA = 3.6 \times 10^{-7}$ curies/gram U U-depleted

$SA = [0.4 + 0.38 \text{ (enrichment)} + 0.0034 \text{ (enrichment)}2] \times 10^{-6} \geq 0.72$

where enrichment is the percentage by weight of U-235, expressed as percent.

20/ Based on alpha disintegration rate of Th-232, Th-230, and their daughter products.

21/ Based on alpha disintegration rate of U-238, U-234, and U-235.

SECTION 4.

TRANSPORTATION OF RADIOACTIVE MATERIALS

(FOOTNOTES APPEAR AT THE END OF THIS SECTION)

PART A. GENERAL

RH-3000. Authority. Act 8 of Second Extraordinary Session of 1961, as amended.

RH-3001. Effective Date. The provisions of these Regulations shall become operative on the effective date of an agreement executed by the State of Arkansas and the Federal Government under the provisions of Section 274 of the Atomic Energy Act of 1954 as amended (73 STAT. 689).

RH-3002. Purpose and Scope.

(a) This part establishes requirements for packaging, preparation for shipment, and transportation of licensed material.

(b) The packaging and transport of licensed material are also subject to the regulations of other agencies (e.g., the U.S. Department of Transportation, the U.S. Nuclear Regulatory Commission, and the U.S. Postal Service) having jurisdiction over means of transport. The requirements of this part are in addition to, and not in substitution for, other requirements.

(c) The regulations in this part apply to any licensed authority by specific or general license issued by the Department to receive, possess, use, or transfer licensed material to a carrier for transport, transports the material outside the site of usage as specified in the Department's license, or transports that material on public highways. No provision of this part authorizes the possession of licensed material.

(d) Exemptions from the requirement for license in RH-3200 are specified in RH-3300.

(e) The regulations of this part apply to any person required to obtain a certificate of compliance or an approved compliance plan if the person delivers radioactive material to a common or contract carrier for transport or transports the material outside the confines of the person's plant or other authorized place of use.

RH-3002. (Cont'd)

(f) This part also gives notice to all persons who knowingly provide to any licensee, certificate holder, quality assurance program approval or to a contractor, or subcontractor of any of them, components, equipment, materials, or other goods or services, that relate to a licensee's certificate holder's, quality assurance program approval holder's or applicant's activities subject to this part, that they may be individually subject to Department enforcement action for violation of RH-1511 (Deliberate misconduct).

The regulations in this Section establish requirements for packaging, preparation for shipment, and transportation of radioactive material in excess of Type A quantities.

RH-3003. Communications. All communications concerning these Regulations shall be addressed to the Division of Radiation Control and Emergency Management, Arkansas Department of Health, Division of Radiation Control and Emergency Management, 4815 West Markham, Mail Slot 30, Little Rock, Arkansas 72205-3867.

RH-3004.-
RH-3099. Reserved.

PART B.
DEFINITIONS

RH-3100. General Definitions.

The following terms are as defined for the purpose of this Section. To ensure compatibility with international transportation standards, all limits in this part are given in terms of dual units: The International System of Units (SI) followed or preceded by U.S. standard or customary units. The U.S. customary units are not exact equivalents, but rounded to a convenient value, providing a functionally equivalent unit. For the purpose of this part, either unit may be used.

a. A_1 - Maximum activity of special form of radioactive material permitted in a Type A package.

These values are either listed in RH-2700, Table C-1 or may be derived in accordance with the procedure prescribed in RH-2700, Appendix C.

b. A_2 - Maximum activity of radioactive material, other than special form, LSA and SCO material, permitted in a Type A package. These values are either listed in RH-2700, Table C-1 or may be derived in accordance with the procedure prescribed in RH-2700, Appendix C.

c. Carrier - A person engaged in the transportation passengers or property by land or water as a common, or contract, or private carrier, or by civil aircraft.

d. Certificate Holder - a person who has been issued a certificate of compliance or other package approval by the U.S. Nuclear Regulatory Commission.

e. CFR - Code of Federal Regulations.

f. Close reflection by water - immediate contact by water of sufficient thickness for maximum reflection of neutrons.

g. Containment system - the assembly of components of the packaging intended to retain the radioactive material during transport.

h. Conveyance -

(1) ‘For transport by public highway or rail’ any transport vehicle or large freight container;

(2) 'For transport by water' any vessel, or any hold, compartment, or defined deck area of a vessel including any transport vehicle on board the vessel; and

(3) 'For transport by aircraft' any aircraft.

i. Exclusive use (also referred to in other regulations as "sole"). The sole use of a conveyance by a single consignor of a conveyance for which all initial, intermediate, and final loading and unloading are carried out in accordance with the direction of the consignor or consignee. The consignor and the carrier must ensure that any loading or unloading is performed by personnel having radiological training and resources appropriate for safe handling of the consignment. The consignor must issue specific instructions, in writing, for maintenance of exclusive use shipment controls, and include them with the shipping paper information provided by the consignor.

j. Fissile material - Plutonium-238, plutonium-239, plutonium-241, uranium-233, uranium-235, or any combination of the radionuclides. Unirradiated natural uranium and depleted uranium that has been irradiated in thermal reactors only are not included in this definition.

k. Licensed material - Radioactive material received, possessed, used, or transferred under a general or specific license issued by the Department pursuant to the regulations in this part.

l. Low Specific Activity (LSA) - radioactive material with limited specific activity that satisfies the descriptions and limits set forth below. Shielding materials surrounding the LSA material may not be considered in determining the estimated average specific activity of the package contents. LSA material must be in one of three groups:

(1) LSA-I

(i) Ores containing only naturally occurring radioactive radionuclides (e.g., uranium, thorium) and uranium or thorium concentrates of such ores; or

(ii) Solid unirradiated natural uranium or depleted uranium or natural thorium or their solid or liquid compounds or mixtures; or

(iii) Radioactive material, other than fissile material, for which the A_2 value is unlimited; or

(iv) Mill tailings, contaminated earth, concrete, rubble, other debris, and activated material in which the radioactive material is essentially uniformly distributed, and the average specific activity does not exceed 10 E-6 A_2/g.

(2) LSA-II

(i) Water with tritium concentration up to 20.0 Ci/liter (0.8 TBq/liter); or

(ii) Material in which the radioactive material is distributed throughout, and the average specific activity does not exceed 10 E-4 A_2/g for solids and gases, and 10 E-5 A_2/g for liquids.

(3) LSA-III

Solids (e.g., consolidated wastes, activated materials) in which:

(i) The radioactive material is distributed throughout a solid or a collection of solid objects, or is essentially uniformly distributed in a solid compact binding agent (such as concrete, bitumen, ceramic, etc.); and

(ii) The radioactive material is relatively insoluble, or it is intrinsically contained in a relatively insoluble material, so that, even under loss of packaging, the loss of radioactive material per package by leaching, when placed in water for seven (7) days would not exceed 0.1 A_2; and

(iii) The average specific activity of the solid does not exceed 2 x E-3 A_2/g.

m. Low toxicity alpha emitters - natural uranium, depleted uranium, natural; uranium-235, uranium-238, thorium-232, thorium-228, or thorium-230 when contained in ores or physical or chemical concentrates or tailings; or alpha emitters with a half-life of less than ten (10) days.

n. Maximum normal operating pressure - the maximum gauge pressure that would develop in the containment system in a period of one (1) year under the heat condition specified in 10 CFR 71.71(c)(1) in the absence of venting, external cooling by an ancillary system or operational controls during transport.

o. Natural thorium - Thorium with the naturally occurring distribution of thorium isotopes (essentially 100 weight percent thorium-232).

p. Normal form radioactive material - Radioactive material that has not been demonstrated to qualify as “special form radioactive material”.

q. Optimum interspersed hydrogenous moderation - The presence of hydrogenous material between packages to such an extent that the maximum nuclear reactivity results.

r. Package - Packaging together with its radioactive contents as presented for transport.

1. Fissile material package - A fissile material packaging together with its fissile material contents.

2. Type B package - A Type B packaging together with its radioactive contents. On approval, a Type B package design is designated by NRC as B(U) unless the package has a maximum normal operating pressure of more than 700 kilopascal (100 lb/in^2) gauge or a pressure relief device which would allow the release of radioactive material to the environment under the tests specified in 10 CFR 71.73 (hypothetical accident conditions), in which case it will receive a designation B(M). B(U) refers to the need for unilateral approval of international shipments: B(M) refers to the need for multilateral approval of international shipments. There is no distinction made in how packages with these designations may be used in domestic transportation. To determine their distinction for international transportation, see DOT regulations in 49 CFR Part 173. A Type B package approved prior to September 6, 1983, was designated only as Type B. Limitations on its use are specified in 10 CFR 71.73.

s. Packaging - Assembly of components necessary to ensure compliance with the packaging requirements of this Part. It may consist of one or more receptacles, absorbent materials, spacing structures, thermal insulation, radiation shielding, and devices for cooling or absorbing mechanical shocks. The vehicle, tie-down system, and auxiliary equipment may be designated as part of the packaging.

t. Special form radioactive material - Radioactive material which satisfies the following conditions:

1. It is either a single solid piece or is contained in a selected capsule that can be opened only by destroying the capsule; and

2. The piece or capsule has at least one dimension not less than five (5) millimeters (0.197 inch); and

3. It satisfies the test requirements of 10 CFR 71.75. A special form encapsulation designed in accordance with the requirements of 10 CFR 71.4 in effect on June 30, 1983, and constructed before July 1, 1985, and a special form encapsulation designed in accordance with the requirements of 10 CFR 71.4 in effect on March 31, 1996, and constructed before April 1, 1998, may continue to be used. Any other special form encapsulation must meet the specifications of this definition.

u. Specific activity of a radionuclide - The radioactivity of the radionuclide per unit mass of that nuclide. The specific activity of a material in which the radionuclide is essentially uniformly distributed is the radioactivity per unit mass of the material.

v. State - A State of the United States, the District of Columbia, the Commonwealth of Puerto Rico, the Virgin Islands, Guam, American Samoa, and the Commonwealth of the Northern Mariana Islands.

w. Surface Contaminated Object (SCO) - A solid object that is not itself classed as radioactive material, but which has radioactive material distributed on any of its surfaces. SCO must be in one of two (2) groups with surface activity not exceeding the following limits:

1. SCO-I: A solid object on which:

(i) The non-fixed contamination on the accessible surface averaged over 300 cm² (or the area of the surface if less than 300 cm²) does not exceed 10^{-4} microcurie/cm² (4 Bq/cm²) for beta and gamma and low toxicity alpha emitters, or 10^{-5} microcurie/cm² (0.4 Bq/cm^2) for all other alpha emitters; and

(ii) The fixed contamination on the accessible surface averaged over 300 cm² (or the area of the surface if less than 300 cm²) does not exceed 1.0 microcurie/cm² ($4X10^4$ Bq/cm^2) for beta and gamma and low toxicity alpha emitters, or 20.1 microcurie/cm² ($4X10^3$ Bq/cm) all other alpha emitters; and

(iii) The non-fixed contamination plus the fixed contamination on the inaccessible surface averaged over 300 cm² (or the area of the surface if less than 300 cm²) does not exceed 1.0 microcurie/cm² ($4X10^4$ Bq/cm²) for beta and gamma and low toxicity alpha emitters, or 0.1 microcurie/cm² ($4X10^3$ Bq/cm²) all other alpha emitters.

2. SCO-II: A solid object on which the limits for SCO-I are exceeded and on which:

(i) The non-fixed contamination on the accessible surface averaged over 300 cm² (or the area of the surface if less than 300 cm^2) does not exceed 10^{-2} microcurie/cm² (400 Bq/cm²) for beta and gamma and low toxicity alpha emitters, or 10^{-3} microcurie/cm² (40 Bq/cm²) all other alpha emitters;

(ii) The fixed contamination on the accessible surface averaged over 300 cm² (or the area of the surface if less than 300 cm²) does not exceed 20 microcurie/cm² ($8X10^5$ Bq/cm²) for beta and gamma and low toxicity alpha emitters, or 2 microcurie/cm² ($8X10^4$ Bq/cm²) all other alpha emitters; and

(iii) The non-fixed contamination plus the fixed contamination on the inaccessible surface averaged over 300 cm² (or the area of the surface if less than 300 cm²) does not exceed 20 microcurie/cm² ($8X10^5$ Bq/cm²) for beta and gamma and low toxicity alpha emitters, or 2 microcurie/cm² ($8X10^4$ Bq/cm²) all other alpha emitters.

y. Transport index - The dimensionless number (rounded up to the next tenth) placed on the label of a package, to designate the degree of control to be exercised by the carrier during transportation. The transport index is determined as follows:

1. For non-fissile material packages, the number determined by multiplying the maximum radiation level in millisievert (mSv) per hour at one meter (3.3 ft) from the external surface of the package by 100 (equivalent to maximum radiation level in millirem per hour at one meter (3.3 ft)); or

2. For fissile material packages, the number determined by multiplying the maximum radiation level in millisievert (mSv) per hour at one meter (3.3 ft) from the external surface of the package by 100 (equivalent to maximum radiation level in millirem per hour at one meter (3.3 ft)); or, for criticality control purposes, the number obtained as described in 10 CFR 71.59, whichever is larger.

z. Type A quantity - A quantity of radioactive material, the aggregate radioactivity of which does not exceed A_1 for special form radioactive material or A_2 for normal form radioactive material, where A_1 and A_2 are given in Section 3, RH-2700, Table C-1 of this Part or may be determined by procedures described in Appendix C of this Part.

aa. Type B quantity means a quantity of radioactive material greater than a Type A quantity.

ab. Uranium - natural, depleted, enriched.

1. Natural uranium. Uranium with the naturally occurring distribution of uranium isotopes (approximately 0.711 weight percent uranium-235, and the remainder by weight essentially uranium-238).

RH-3100. (Cont'd)

2. Depleted uranium.
Uranium containing less uranium-235 than the naturally occurring distribution of uranium isotopes.

3. Enriched uranium
Uranium containing more uranium-235 than the naturally occurring distribution of uranium isotopes.

RH-3101.-
RH-3199. Reserved.

PART C.
GENERAL REGULATORY PROVISIONS

RH-3200. Transportation of Radioactive Material. No person shall deliver radioactive material to a carrier for transport or transport radioactive material except as authorized in a general or specific license issued by the Department or as exempted in RH-3300.

Requirement for License.

Except as authorized in a general license or a specific license issued by the Department, or as exempted in this part, no licensee may:

a. Deliver licensed material to a carrier for transport; or

b. Transport licensed material.

RH-3201. Exemptions.

a. Common and contract carriers, freight forwarders and warehousemen who are subject to the rules and regulation of the U.S. Department of Transportation in 49 CFR 170 through 189 or the U.S. Postal Service in the U.S. Postal Service Domestic Mail Manual (DMM), Section C-023.9.0 and the U.S. Postal Service, are exempt from these requirements of this Section to the extent that they transport or store radioactive material in the regular course of their carriage for others or storage incident thereto. Common and contract carriers who are not subject to the requirements of the U.S. Department of Transportation or U.S. Postal Service are subject to RH-3200 and other applicable Sections of these Regulations.

b. Physicians, as defined in RH-200, are exempt from the requirements of RH-3202 to the extent that they transport radioactive material for use in the practice of medicine.

c. Any licensee is exempt from RH-3200 to the extent that the licensee delivers to a carrier for transport a package containing radioactive material having a specific activity in excess of 0.002 microcurie per gram (70 becquerels per gram).

RH-3202. Transportation of Radioactive Material.

a. Each licensee who transports licensed material outside of the confines of the licensee's plant or other place of use, or who delivers licensed material to a carrier for transport, shall:

1. Comply with the applicable requirements, appropriate to the mode of transport, of the regulations of DOT 49 CFR Parts 170 through 189; and

2. Assure that any special instructions needed to safely open the package are sent to or have been made available to the consignee.

b. If, for any reason, the regulations of the U.S. Department of Transportation are not applicable to a shipment of licensed material, the licensee shall conform to the standards and requirements of those regulations to the same extent as if the shipment was subject to the regulations.

RH-3203. Deleted. (See RH-3405)

RH-3204.-
RH-3299. Reserved.

PART D.
EXEMPTIONS AND ADDITIONAL REQUIREMENTS

RH-3300. Exemptions.

a. Common and contract carriers, freight forwarders and warehousemen who are subject to the rules and regulation of the U.S. Department of Transportation or the U.S. Postal Service are exempt from these Regulations to the extent that they transport or store radioactive material in the regular course of their carriage for another or storage incident thereto. Common and contract carriers who are not subject to the rules and regulations of the U.S. Department of Transportation or U.S. Postal Service are subject to RH-3200 and other applicable Sections of these Regulations.

b. Physicians, as defined in RH-200, are exempt from the requirements of RH-3202 to the extent that they transport radioactive material for use in the practice of medicine.

c. Any licensee is exempt from RH-3200 to the extent that he/she delivers to a carrier for transport packages each of which contains no radioactive material having a specific activity in excess of 0.002 microcurie per gram.

d. Any licensee who delivers radioactive material to a carrier for transport, where such transport is subject to the regulations of the U.S. Postal Service, is exempt from the provisions of
RH-3200.

PART E.
GENERAL LICENSES

RH-3301. General License For Carriers.

a. A general license is hereby issued to any common or contract carrier not exempt under RH-3201 to receive, possess, transport, and store radioactive material in the regular course of their carriage for another or storage incident thereto, provided the transportation and storage is in accordance with the applicable requirements, appropriate to the mode of transport, of the U.S. Department of Transportation insofar as such requirements relate to the loading and storage of packages, placarding of the transporting vehicle, and incident reporting. Notification of incidents shall be filed with, or made to, the Department as prescribed in 49 CFR, regardless of and in addition to notification made to U.S. Department of Transportation or other Agencies.

b. A general license is hereby issued to any private carrier to transport radioactive material, provided the transportation and storage is in accordance with the applicable requirements, appropriate to the mode of transport, of the U.S. Department of Transportation insofar as such requirements relate to the loading and storage of packages, placarding of the transporting vehicle, and incident reporting. Notification of an incident shall be filed with, or made to, the Department as prescribed in 49 CFR, regardless of and in addition to notification made to U.S. Department of Transportation or other Agencies.

c. Persons who transport radioactive material pursuant to the general licenses in RH-3301.a. and b. are exempt from the requirements of Section 3 entitled “Standards for Protection” and Section 3, Part N entitled “Notices, Instructions, and Reports to Workers; Inspections” of these regulations to the extent that they transport radioactive material.

RH-3302. General License For NRC Approved Packages.

a. A general license is hereby issued to any licensee of the Department to transport, or to deliver to a carrier for transport, licensed material in a package for which a license, certificate of compliance, or other approval has been issued by the U.S. Nuclear Regulatory Commission (NRC).

RH-3302. (Cont'd)

b. This general license applies only to a licensee who:

1. Has a copy of the specific license, certificate of compliance, or other approval of the package and has the drawings and other documents referenced in the approval relating to the use and maintenance of the packaging and to the actions to be taken prior to shipment;

2. Complies with the terms and conditions of the license, certificate, or other approval, as applicable, and the applicable requirements of this Section;

3. Prior to the licensee's first use of the package, has registered with the NRC; and

c. The general license in RH-3302.a. applies only when the package approval authorizes use of the package under this general license.

d. For previously approved Type B packages which are not designated as either B(U) or B(M) in the NRC Certificate of Compliance, this general license is subject to additional restrictions of RH-3303.

RH-3303. General License For Previously Approved Type B Packages.

a. A Type B package previously approved by the NRC, but not designated as B(U) or B(M) in the NRC Certificate of Compliance, may be used under the general license of RH-3302 with the following additional limitations:

1. Fabrication of the packaging was satisfactorily completed before August 31, 1986, as demonstrated by application of its model number in accordance with NRC regulations; and

2. The package may not be used for a shipment to a location outside the United States, except approved under special arrangement in accordance with 49 CFR 173.477.

RH-3304. General License For DOT Specification Container.

a. A general license is hereby issued to any licensee to transport or to deliver to a carrier for transport licensed material in a specification container for fissile material or a Type B quantity of radioactive material as specified in the regulations of the U.S. Department of Transportation in 49 CFR Parts 173 and 178.

b. This general license applies only to a licensee who:

1 Has a copy of the specification;

2. Complies with the terms and conditions of the specification and the applicable requirements of this Section; and

3. Has a quality assurance program required by RH-3500.

c. This general license in RH-3304.a. is subject to the limitation that the specification container may not be used for a shipment to a location outside the United States except by multilateral approval as defined in the U.S. Department of Transportation's regulation 49 CFR 173.403.

RH-3305. General License For Use of Foreign Approved Package.

a. A general license is hereby issued to any licensee to transport or to deliver to a carrier for transport licensed material in a package the design of which has been approved in a foreign national competent authority certificate which has been revalidated by the U.S. Department of Transportation as meeting the applicable requirements of 49 CFR 171.12.

b. This general license applies only international shipments.

c. This general license applies only to a licensee who:

1. Has a copy of the applicable certificate, the revalidation, and the drawings and other documents referenced in the certificate relating to the use and maintenance of the packaging and to the actions to be taken prior to shipment;

2. Complies with the terms and conditions of the certificate and revalidation and with applicable requirements of this Section; and

3. Has a quality assurance program approved by the U.S. Nuclear Regulatory Commission.

RH-3306. General License For Fissile Material, Limited Quantity Per Package.

a. A general license is issued to any licensee of the Department to transport fissile material, or to deliver fissile material to a carrier for transfer, without complying with the package standards of this Section, if the material is shipped in accordance with this Section.

b. The general license applies only to a licensee who has a quality assurance program approved by the Department as satisfying the provisions of RH-3500.

c. Except as provided in RH-3306.d., this general license applies only when a package contains no more than a Type A quantity of radioactive material, including only one of the following:

1. Up to 40 g of uranium-235;

2. Up to 30 g of uranium-233;

3. Up to 25 g of fissile radionuclides of plutonium, except that for encapsulated plutonium-beryllium neutron sources in special form, an A_1 quantity of plutonium may be present; or

4. A combination of fissile radionuclides in which the sum of the ratios of the amounts of each radionuclide to the corresponding maximum amounts in RH-3306.c.1, .2, and .3 does not exceed unity.

d. For packages where fissile material is mixed with substances having an average hydrogen density greater than water, this general license applies only when a package containing no more than a Type A quantity of radioactive material, including only one of the following:

1. Up to 29 g of uranium-235;

2. Up to 18 g of uranium-233;

3. Up to 18 g of fissile radionuclides of plutonium, or

4. A combination of fissile radionuclides in which the sum of the ratios of the amounts of each radionuclide to the corresponding maximum amounts in RH-3306.d.1, .2, and .3 does not exceed unity.

RH-3306. (Cont'd)

e. Except for the beryllium contained within the special form plutonium-beryllium sources authorized in RH-3306.c., this general license applies only when the beryllium, graphite, or hydrogenous material enriched in deuterium is not present in quantities not exceeding 0.1% of the fissile material mass.

f. 1. Except as specified in RH-3306.f.2. for encapsulated plutonium beryllium sources, this general license applies only when a package is labeled with a transport index not less than the number given by the following equation, where the package contains 'x' grams of uranium-235, 'y' grams of uranium-233, and 'z' grams of the fissile radionuclides of plutonium:

Minimum Transport Index =

$$(0.25x + 0.33y + 0.4z)$$

2. For a package in which the only fissile material is in the form of encapsulated plutonium-beryllium neutron sources in special form, the transport index based on criticality considerations may be taken as 0.025 times the number of grams of the fissile radionuclides of plutonium.

3. Packages which have a transport index greater than ten (10) are not authorized under this general license provisions of this Section.

RH-3307. <u>General License: Fissile Material, Limited Quantity, Controlled Shipment.</u>

a. A general license is issued to any licensee of the Department to transport fissile material, or to deliver fissile material to a carrier for transfer, without complying with the package standards of this Section, if limited material is shipped in accordance with this Section.

b. The general license applies only to a licensee who has a quality assurance program approved by the Department as satisfying the provisions of RH-3500.

c. This general license applies only when a package contains no more than a Type A quantity of radioactive material and no more than 400 g total of the fissile radionuclides of plutonium encapsulated as plutonium-beryllium neutron sources in special form.

RH-3307. (Cont'd)

d. This general license applies only when:

1. The mass of fissile radionuclides in the shipment is limited such that the

$$\frac{\text{grams of uranium-235}}{X} + \frac{\text{grams of other fissile material}}{Y} > 1$$

where X and Y are the mass defined in the table following RH-3307.d.2.

2. The encapsulated plutonium-beryllium neutron sources are in special form and the total mass of fissile radionuclides in the shipment does not exceed 2500 g.

PERMISSIBLE MASS LIMITS FOR SHIPMENTS OF FISSILE MATERIAL

Fissile material	Fissile material mass (g) mixed with substances having a hydrogen density less than or equal to water	Fissile material mass (g) mixed with substances having a hydrogen density greater than water
Uranium-235 (X)	500	290
Other fissile material (Y)	300	180

e. Except for the beryllium contained within the special form plutonium-beryllium sources authorized in RH-3307.c. and d., this general license applies only when the beryllium, graphite, or hydrogenous material enriched in deuterium is not present in quantities not exceeding 0.1% of the fissile material mass.

f. This general license applies only when shipment of these packages is made under procedures specifically authorized by DOT, in accordance with 49 CFR Part 173 of its regulations, to prevent loading, transport, or storage of these packages with other fissile material shipments.

RH-3308.-
RH-3399. Reserved.

Part F.
Enforcement

RH-3400. Deleted.

RH-3401. Routine Determination.

Prior to each shipment of licensed material, the licensee shall ensure that the package with its contents satisfies the applicable requirements of this Section and the license. The licensee shall determine that:

a. The package is proper for the contents to be shipped;

b. The package is in unimpaired physical condition except for superficial defects such as marks or dents;

c. Each closure device of the packaging, including any required gasket, is properly installed and secured and free of defects;

d. Any system for containing liquid is adequately sealed and has adequate space or other specified provision for expansion of the liquid;

e. Any pressure relief device is operable and set in accordance with written procedures;

f. The package has been loaded and closed in accordance with written procedures;

g. Any structural part of the package which could be used to lift or tie down the package during transport is rendered inoperable for that purpose unless it satisfies design requirements specified by the U.S. Nuclear Regulatory Commission.

h. 1. The level of non-fixed (removable) radioactive contamination on the external surfaces of each package offered for shipment is as low as reasonably achievable. The level of non-fixed (removable) radioactive contamination may be determined by wiping an area of 300 square centimeters of the surface concerned with an absorbent material, using moderate pressure, and measuring the activity on the wiping material. Sufficient measurements must be taken in the most appropriate locations to yield a representative assessment of the non-fixed contamination levels. Except as provided in

RH-3401.h.2., the amount of radioactivity measured on any single wiping material, when averaged over the surface wiped, must not exceed the limits given in Table 3 below at any time during transport. Other methods of assessment of equal or greater efficiency may be used. When other methods are used, the detection efficiency of the method used must be taken into account and in no case may the removable contamination on the external surfaces of the package exceed ten (10) times the limits listed in Table 3.

2. In the case of packages transported as exclusive use shipments by rail or highway only, the non-fixed radioactive contamination at any time during transport must not exceed ten (10) times the levels prescribed in RH-3401.h.1. The levels at the beginning of transport must not exceed the levels in RH-3401.h.1.

3. In the case of packages containing radioactive materials is Special Form, a leak test performed in the past six (6) months may be used as evidence that the requirements of RH-3401.h.1. has been met.

i. External radiation levels around the package and around the vehicle, if applicable, will not exceed 200 millirems per hour (2 mSv/h) at any point on the external surface of the package at any time during transportation. The transport index shall not exceed 10.

j. For a package transported in exclusive use by rail, highway or water, radiation levels external to the package may exceed the limits specified in RH-3401.h.1. but shall not exceed any of the following:

1. 200 millirems per hour (2 mSv/h) on the accessible external surface of the package unless the following conditions are met, in which case the limit is 1000 millirems per hour (10 mSv/h);

(A) The shipment is made in a closed transport vehicle,

(B) Provisions are made to secure the package so that its position within the vehicle remains fixed during transportation, and

(C) There are no loading or unloading operations between the beginning and end of the transportation.

2. 200 millirems per hour (2 mSv/h) at any point on the outer surface of the vehicle, including the upper and lower surfaces, or, in the case of an open vehicle, at any point on the vertical planes projected from the outer edges of the vehicle, on the upper surface of the load, and on the lower external surface of the vehicle;

3. 10 millirems per hour (0.1 mSv/h) at any point two (2) meters from the vertical planes represented by the outer lateral surfaces of the vehicle, or, in the case of an open vehicle, at any point two (2) meters from the vertical planes projected from the outer edges of the vehicle; and

4. 2 millirems per hour (0.02 mSv/h) in any normally occupied positions of the vehicle, except that this provision does not apply to private motor carriers when persons occupying these positions are provided with special health supervision, personnel radiation exposure monitoring devices, and training in accordance with RH-2803, **INSTRUCTIONS TO WORKERS.**

k. A package must be prepared for transport so that in still air at 100 degrees Fahrenheit (38 degrees Celsius) and in the shade, no accessible surface of a package would have a temperature exceeding 122 degrees Fahrenheit (50 degrees Celsius) in a nonexclusive use shipment or 180 degrees Fahrenheit (82 degrees Celsius) in an exclusive use shipment. Accessible package surface temperatures shall not exceed these limits at any time during transportation.

Table 3

Removable External Radioactive Contamination Wipe Limits

Contaminant	Maximum Permissible Limits	
	uCi/cm^{2}*	dpm/cm^{2}
Beta-gamma emitting radionuclides; all radionuclides with half-lives less than ten days; natural uranium; natural thorium; uranium-235; uranium-238; thorium-232; thorium-228 and thorium-230 when contained in ores or physical concentrates	**10^{-5}**	**22**
All other alpha emitting radionuclides	**10^{-6}**	**2.2**

NOTE **(*) == to convert microcuries (µCi) to SI units of megabecquerels, multiply the values by 37.**

RH-3402. Air Transport of Plutonium.

Notwithstanding the provisions of any general licenses and notwithstanding any exemptions stated directly in this Section or included indirectly by citation of the U.S. Department of Transportation (DOT) regulations, as may be applicable, the licensee shall assure that plutonium in any form is not transported by air, or delivered to a carrier for air transport, unless:

a. The plutonium is contained in a medical device designed for individual human application; or

b. The plutonium is contained in a material in which the specific activity is not greater than 0.002 microcuries per gram (74 Bq/gm) of material and in which the radioactivity is essentially uniformly distributed; or

c. The plutonium is shipped in a single package containing no more than an A_2 quantity of plutonium in any isotope or form and is shipped in accordance with RH-3202; or

RH-3402. (Cont'd)

d. The plutonium is shipped in a package specifically authorized in the certificate of compliance, issued by the U.S. Nuclear Regulatory Commission, for the shipment of plutonium by air and the licensee requires, through special arrangement with the carrier, compliance with 49 CFR 175.704, the U.S. Department of Transportation regulations applicable to the air transport of plutonium.

RH-3403. Records.

a. Each licensee shall maintain for a period of two (2) years after shipment a record of each shipment of licensed material not exempt under RH-3201, showing, where applicable:

1. Identification of the packaging by model number;

2. Verification that there were no significant defects in the packaging, as shipped;

3. Volume and identification of coolant;

4. Type and quantity of licensed material in each package, and the total quantity of each shipment;

5. Date of the shipment;

6. Name and address of the transferee;

7. Address to which the shipment was made; and

8. Results of the determinations required by RH-3401.

b. The licensee shall make available to the Department for inspection, upon reasonable notice, all records required by this Section.

RH-3404. Reports.

The licensee shall report to the Department within thirty (30) days:

a. Any instance in which there is significant reduction in the effectiveness of any authorized packaging during use; and

b. Details of any defects with safety significance in the packaging after first use, with the means employed to repair the defects and prevent their recurrence.

RH-3405. Advance Notification of Transport of Nuclear Waste.[2/]

a. Prior to the transport of any nuclear waste outside of the confines of the licensee's facility or other place of use or storage, or prior to the delivery of any nuclear waste to a carrier for transport, each licensee shall provide advance notification of such transport to the Governor (or Governor's designee) of each State within or through which the waste will be transported.

b. Advance notification is required only when:

1. The nuclear waste is required to be in Type B packaging for transportation;

2. The nuclear waste is being transported into, within, or through a State en-route to a disposal site or to a collection point for transport to a disposal site;

3. The quantity of licensed material in a single package exceeds:

A. 3000 times the A_1 value of the radionuclides as specified in RH-2700, Table C-1 for special form radioactive material;

B. 3000 times the A_2 value of the radionuclides as specified in RH-2700, Table C-1 for normal form radioactive material; or

C. 27,000 Curies (1000 terabecquerel)

c. Each advance notification required by RH-3405.a. shall contain the following information:

1. The name, address and telephone number of the shipper, carrier and receiver of the shipment;

2. A description of the nuclear waste contained in the shipment as required by these Regulations or the U.S. Department of Transportation in 49 CFR 172.202 and 172.203(d);

3. The point of origin of the shipment and the seven-day period during which departure of the shipment is estimated of occur;

4. The seven-day period during which arrival of the shipment at State boundaries is estimated to occur;

5. The destination of the shipment and the seven-day period during which arrival of the shipment is estimated to occur; and

6. A point of contact with a telephone number for current shipment information.

d. The notification required by RH-3405.a. shall be made in writing to the office of each appropriate Governor (or Governor's designee) and to the Department. A notification delivered by mail must be postmarked at least seven (7) days before the beginning of the seven-day period during which departure of the shipment is estimated to occur. A notification delivered by messenger must reach the Office of the Governor (or Governor's designee) at least four (4) days before the beginning of the seven-day period during which departure of the shipment is estimated to occur. A copy of the notification shall be retained by the licensee for three (3) years.

e. The licensee shall notify each appropriate Governor (or Governor's designee) and the Department of any changes to schedule information provided pursuant to RH-3405. Such notification shall be by telephone to a responsible individual in the Office of the Governor (or Governor's designee) of the appropriate state or states. The licensee shall maintain for three (3) years a record of the name of the individual contacted.

f. Each licensee who cancels a nuclear waste shipment for which advance notification has been sent shall send a cancellation notice, identifying the advance notification that is being canceled, to the Governor (or Governor's designee) of each appropriate state and to the Department. A copy of the notice shall be retained by the licensee for three (3) years.

RH-3406.-
RH-3499. Reserved.

PART G.
QUALITY ASSURANCE

RH-3500. Quality Assurance Requirements.

a. Unless otherwise authorized by the Department, each licensee shall establish, maintain, and execute a quality assurance program to verify by procedures such as checking, auditing, and inspection that deficiencies, deviations, and defective material are promptly identified and corrected.

b. The licensee shall identify the material and components to be covered by the quality assurance program.

c. Each licensee shall document the quality assurance program by written procedures or instructions and shall carry out the program in accordance with those procedures throughout the period during which packaging is used.

d. Prior to the use of any package for the shipment of radioactive material, each licensee shall obtain approval by the Department of its quality assurance program.

e. The licensee shall maintain sufficient written records to demonstrate compliance with the quality assurance program. Records of quality assurance pertaining to the use of a package for shipment of radioactive material shall be maintained for a period of three (3) years after shipment.

RH-3501.
RH-3999. Reserved.

FOOTNOTES FOR SECTION 4.

[1/] Any notification of incidents referred to in those requirements shall be filed with or made to, the Department.

[2/] For the purpose of this Section, “nuclear waste” means any large quantity of source, byproduct, or special nuclear material required to be in Type B packaging while transported to, through or across State boundaries to a disposal site, or to a collection point for transport to a disposal site.

SECTION 5.
RULES OF PRACTICE

PART A. GENERAL

RH-4000. Authority. Act 8 of Second Extraordinary Session of 1961, as amended.

RH-4001. Effective Date. January 1, 1963.

RH-4002. Scope. This Section contains the requirements applicable to and governing the proceeding of any administrative hearing pertinent these Regulations.

RH-4003. Communications.

a. All communications concerning this Regulation shall be addressed to the Division of Radiation Control and Emergency Management, Arkansas Department of Health, Division of Radiation Control and Emergency Management, 4815 West Markham, Mail Slot 30, Little Rock, Arkansas 72205-1867.

b. The Director of the Arkansas Department of Health or a duly appointed Hearing Officer shall specify the time and place of all hearings.

RH-4004. Reserved.

PART B.
ADMINISTRATION

RH-4005. Administrative Examination of Applications. Applications for the issuance of a license, amendment of a license at the request of the holder and renewal of a license will be given a docket or other identifying number for administrative examination. The applicant may be required to submit additional information and may be requested to confer informally regarding the application. The Department will give to others such notice of the filing of applications as is required under the applicable provisions of these Regulations and such additional notices as it deems appropriate.

RH-4006. Action on Application, Hearings.

a. The Department will, upon request of the applicant or intervener and may upon its own initiative, direct the holding of a formal hearing prior to taking action on the application. If no prior formal hearing has been held and no notice of proposed action has been served as provided in Subparagraph b of this Paragraph, the Department will direct the holding of a formal hearing upon receipt of a request therefore from the applicant or intervener within thirty (30) days after the issuance of a license or other approval or a notice of denial.

b. In such cases as it deems appropriate, the Department may cause to be served upon the applicant a notice of proposed action upon his/her application and shall cause copies thereof to be served upon interveners or others entitled to or requesting notification. The notice shall state the terms of the proposed action. If a formal hearing has not been held prior to the issuance of the notice, the Department will direct the holding of a formal hearing upon the request of the applicant or an intervener received within fifteen (15) days following the service of the notice.

RH-4007. Effect of Timely Renewal Applications. In the case of an application for renewal, if the licensee has made application for the renewal of a subsisting license at least thirty (30) days prior to its expiration date, the license shall not be deemed to have expired until such application shall have been determined.

RH-4008. Notice of Violation.

a. Prior to the institution of any proceeding for the suspension or revocation of a license for alleged violation of any provision of the Act, Regulations or conditions of a license, the licensee shall be served with a written notice calling the facts to his/her attention and requesting a written explanation or statement in reply. Within fifteen (15) days of the receipt of such notice, the licensee shall send his/her reply to the Department. If the notice relates to conditions or conduct which may be susceptible to correction or to being brought into full compliance by action of the licensee, he/she shall state in his/her reply the corrective steps taken or to be instituted in achieving correction and preventing further violations and the date when such correction and full compliance will be achieved.

RH-4008. (Cont'd)

b. Where, in the opinion of the Department, the public health, interest or safety requires; or the failure to be in compliance is willful; the notice provided for in this Section may be omitted.

RH-4009. Orders. In any case described in RH-4008 of this Regulation, the Department may issue to the licensee a notice to comply with the applicable provisions of the Act or the rules and regulations of the Arkansas State Board of Health or any order issued by the Department. The order shall apprise the licensee that he/she has the right to request a hearing within thirty (30) days by making a written request therefore to the Director. In the event a request for a hearing is received by the Director within the time specified, a notice of hearing shall be issued by the Department in accordance with RH-4028 of these Regulations.

RH-4010. Emergency Orders. Whenever the Department finds that an emergency exists requiring immediate action to protect the public health and safety, the Department may, without notice or hearing, issue a regulation or order reciting the existence of such emergency and requiring that such action be taken as is necessary to meet the emergency. Notwithstanding any provision of the Act (Act 8 of Second Extraordinary Session of 1961), such regulation or order shall be effective immediately. Any person to whom such regulation or order is directed shall comply therewith immediately, but on application to the Department shall be afforded a hearing within ten (10) days. On the basis of such hearing, the emergency regulation or order shall be continued, modified or revoked within thirty (30) days after such hearing. Any final order entered in any proceeding under this Paragraph may be appealed within twenty (20) days from the date of issuance thereof, to the Circuit Court of Pulaski County.

RH-4011. Enforcement of Obedience to Orders. In case of the failure on the part of any person, firm or corporation to comply with any lawful order of the Director or with process or in case of the refusal of any witness to testify concerning any matter on which he/she may be lawfully interrogated, the Circuit Court or a Judge thereof having jurisdiction may, on application of the Director, compel obedience by proceeding as in contempt cases.

RH-4012. Impounding Materials. The Department shall have the authority in the event of an emergency to impound or order the impounding of sources of ionizing radiation in the possession of any person who is not equipped to observe or fails to observe the provisions of the Act or any rules or regulations issued thereunder. As promptly as possible and not later than ten (10) days from the impounding, the Department shall serve upon the licensee or registrant an appropriate order for revocation of his/her license or registration together with a notice which shall give the licensee or registrant the right to request a formal hearing concerning the revocation of his/her license or registration and the restoration of the material of which he/she has been deprived.

RH-4013. Filing of Papers. Unless otherwise specified, papers required to be filed with the Department shall be filed with the Radiation Control Programs, Arkansas Department of Health, 4815 West Markham, Mail Slot # 30, Little Rock, Arkansas 72205-3867. Papers required to be filed with the Department shall be deemed filed upon actual receipt with the Department at the place specified; accompanied by proof of service upon the parties required to be served as provided in RH-4016 of these Regulations. Unless otherwise specified, the filing, when by mail or telegram, shall, upon actual receipt, be deemed complete as of the date of deposit in the mail or with the telegraph company. Papers may be filed in person at the Department's offices at Little Rock, Arkansas.

RH-4014. Computation of Time. The time within which any Act under these Regulations is to be accomplished shall be computed by excluding the first day and including the last, unless the last day is Sunday or is a holiday as defined or fixed by statutes now or hereafter in force in this State, and then it shall also be excluded. If the day succeeding such Sunday or holiday is also a holiday or a Sunday, then such succeeding day shall also be excluded.

RH-4015. Extension of Time. Extensions of time for filing or performing any Act required or allowed to be accomplished, and continuances of any proceeding or hearing, may be granted at the discretion of the Department upon application and good cause shown by any party, or upon the initiative of the Department or stipulation of all parties. Where a Hearing Officer has been designated for hearing, the discretion in granting extensions of time and continuances in matters relating to the hearing shall rest with the Hearing Officer.

RH-4016. Subpoenas, Service and Papers. Subpoenas for the attendance of witnesses from any place in the State of Arkansas or the production of books, papers, accounts or documents at a hearing in a pending proceeding will be issued by the Department upon its own motion or upon application in writing incorporating a showing that such subpoena is reasonably required.

a. Service.

1. Service shall be made by delivering in person or by depositing in the United States Mail, properly addressed with postage prepaid, one copy to each party, if entitled thereto. When any party or parties have appeared by attorney, service upon the attorney shall be deemed service upon such party or parties.

2. Proof of service shall be by certificate of attorney affidavit or acknowledgement.

RH-4017. Representation.

a. Except as provided in Subparagraph b of this Paragraph, any person appearing before the Department may do so in person or by a representative. Any person transacting business with the Department in a representative capacity may be required to show his/her authority to act in that capacity.

b. In a formal hearing a person may appear in person or be represented by an Attorney-at-Law.

RH-4018. Intervention.

a. Any person whose interests may be affected by a proceeding may file a petition to intervene not later than five (5) days before the commencement of the hearing or within such other time as may be specified in the notice, or as permitted by the Hearing Officer, describing his/her interest, how it may be affected by Department action and the position he/she is taking in the matter. Service of copies of the petition shall be made upon all parties to the proceeding. The Department, licensee, registrant, or applicant, upon notice and motion and other parties by leave, may contest the right of the petitioner to intervene. A petition for leave to intervene which is not timely filed will be dismissed unless the petitioner shows good cause for failure to file it on time.

RH-4018. (Cont'd)

b. As soon as it is practicable after filing of a petition for intervention and a hearing of argument, if any, the Director or Hearing Officer will issue and serve an order either permitting or denying intervention. If the order is a denial of intervention, it shall contain a statement of the grounds. An order permitting intervention may be conditioned upon such terms as the Director or Hearing Officer may direct.

RH-4019. Effect of Intervention or Denial Thereof. A person permitted to intervene becomes a party to the proceeding.

a. Where a notice of hearing has been issued or a hearing has begun, the admission thereafter of an intervener shall not of itself enlarge or alter the issues without amendment as provided in Subparagraph c of this Paragraph.

b. An order denying intervention will be without prejudice to any proposed limited appearance by the petitioner as one who is not party for the purposes provided in RH-4023 of these Regulations.

c. At any time prior to the time fixed for hearing but not later than five days prior, the party concerned may amend the petition for intervention by filing an amendment and serving it upon the parties. At any time thereafter, amendments may be permitted in the discretion of the Hearing Officer upon such terms as he/she shall prescribe.

RH-4020. Consolidation. Upon motion and good cause shown or upon its own initiative, the Department or Hearing Officer may consolidate two or more proceedings.

RH-4021. Hearings - Formal and Informal.

a. Formal hearings will be held in cases of adjudication of rights.

b. Informal hearings will normally be held for the purposes of obtaining necessary or useful information.

RH-4022. Authority to Administer Oaths. Any oath or affirmation required by or pursuant to the provisions of these Regulations may be administered by any person authorized to administer oaths by the laws of the State of Arkansas.

RH-4023. Informal Hearings Procedure. The procedure to be followed in informal hearings shall be such as will best serve the purpose of the hearing. For example, an informal hearing may consist of the submission of written data, views or arguments with or without oral argument, or may partake of the nature of a conference or may assume some of the aspects of a formal hearing in which the subpoena of witnesses and the production of evidence may be permitted or directed. A formal transcript is not necessarily required.

RH-4024. Formal Hearings. The parties to a formal hearing shall be the Department, the licensee, registrant or applicant as the case may be and any person permitted to intervene pursuant to RH-4018 of these Regulations.

RH-4025. Limited Appearances by Persons Not Parties. With the consent of the Hearing Officer, limited appearances may be entered by persons who are not parties to a hearing without request for or grant of permission to intervene. With the consent of the Hearing Officer and on due notice to the parties, such persons may make oral or written statements of their position on the issues involved in the proceeding, but may not otherwise participate in the hearing.

RH-4026. Designation of Hearing Officer. The hearings herein provided for may be conducted by the Director or the Director may designate Hearing Officers who shall have the power and authority to conduct hearings in the name of the Department at any reasonable time and place.

RH-4027. Function of Hearing Officer. The function of the Hearing Officer is to schedule and conduct hearings on behalf and in the name of the Department on all matters referred for hearing by the Director. It is the duty of the Hearing Officer to cause to be prepared and furnished to the Director for decision, a complete written transcript of the record of the hearing which contains all evidence introduced at the hearing and all pleas, motions, objections and ruling of the Hearing Officer.

RH-4028. Notice of Hearing.

a. Whenever a hearing is granted, the Department will give timely notice of the hearing to all parties and to other persons, if any, entitled to notice. Such notice will state the time, place and nature of the hearing; the legal authority and jurisdiction under which the hearing is to be held; the matters of fact and law asserted or to be considered; and a request for an answer. The time and place for hearing will be fixed with due regard for the convenience and necessity of the parties or their representatives.

b. The notice of hearing may be a separate notice or when appropriate may be embodied in the order issued pursuant to RH-4009.

RH-4029. Answer.

a. Within the time allowed by the notice of hearing for filing and serving an answer, and as required, the answer of a licensee or applicant shall fully advise the Department and any other parties as to the nature of the defense or other position of the answering party, the issues he/she proposes to controvert and those he/she does not controvert, and whether or not he/she proposes to appear and present evidence. If facts are alleged the answer shall admit or deny specifically each allegation of fact; or where knowledge is lacking, the answer may so state and the statement shall operate as a denial. Allegations of fact not denied shall be deemed to be admitted. Matters alleged as affirmative defenses or positions shall be separately stated and identified and, in the absence of a reply, shall be deemed to be controverted. The answer of an intervener shall fully advise the Department and other parties of his/her position and whether or not he/she proposes to appear and present evidence.

b. If a party does not oppose any order or proposed action of the Department embodied in or accompanying the notice of hearing or does not wish to appear and give evidence at the hearing, the answer shall so state. In lieu of appearing, the party may, if he/she chooses, submit a notarized statement of reasons why the proposed order or sanction should not be issued or should be different than proposed and the Department will attribute such weight as it deems deserving to the written reasons.

RH-4030. Reply. In appropriate cases the Department may file and serve a reply to the answer or, if the answer affects other parties to the proceeding, the Director or the Hearing Officer may permit such parties to file and serve a reply.

RH-4031. Default. Failure of a party to file and serve an answer within the time provided in the notice of hearing or as prescribed herein or to appear at a hearing, shall be deemed to authorize the Department at its discretion, as to such party:

a. To find the facts alleged to be true and to enter such finding or order as may be appropriate, without further notice or hearing; or

b. To proceed to take proof, without further notice, on the Allegations or issues set forth in the Specification of Issues.

RH-4032. Admissions. After answer has been filed, any party may file and serve upon the opposing side a written request for the admission of the genuineness and authenticity of any relevant documents described in or attached to the request or for the admission of the truth of any relevant matters of fact stated in the request. Each matter for which an admission is requested shall be deemed admitted unless within the time designated in the request, but not less than ten (10) days after service thereof or such further time as the Hearing Officer may allow upon motion and notice, the party to whom the request is directed serves upon motion and notice, the party to whom the request is directed serves upon the requesting party a sworn statement either denying the matters upon which the admission is requested or setting up the reasons why he/she cannot truthfully admit or deny such matters.

RH-4033. Pre-hearing Conferences.

a. In order to provide opportunity for the settlement of a proceeding or any of the issues therein or for agreement upon procedural and other matters, there may be held at any time prior to or during a hearing, upon due notice of the time and place given to all parties, such conferences of the parties as, in the discretion of the Hearing Officer, time, the nature of the proceeding, and the public interest may permit.

b. Action taken at a pre-hearing conference may be recorded for appropriate use at the hearing in the form of a written stipulation among the parties reciting the matters upon which there has been an agreement. The stipulation shall be binding upon the parties thereto.

RH-4034. Public Hearings. All formal hearings shall be public except in cases involving restricted data.

RH-4035. Evidence in Formal Hearings.

a. Every party to the hearing shall have the right to present such oral or documentary evidence and rebuttal evidence and conduct such cross-examination as may be required for a full and true disclosure of the facts. The parties shall be encouraged to present evidence in written form.

b. The Hearing Officer shall exclude all irrelevant, immaterial, or unduly repetitious evidence.

c. Objections to the admission or exclusion of evidence shall state the grounds of objections. The transcript shall include the objections, the grounds and the rulings, but not the argument of the grounds, unless ordered by the Hearing Officer.

d. Any offer of proof made in connection with an objection taken to the ruling of the Hearing Officer, excluding or rejecting proffered oral testimony, shall consist of a statement of substance of the evidence which the party contends would be adduced by such testimony. If the excluded material is documentary or written, a copy of such material shall be marked for identification and shall constitute the offer of proof.

e. An official record of a governmental agency or an entry in such record, when admissible, may be evidenced by an official publication thereof or by a copy attested as a true copy by the officer having legal custody of the record, or by his/her deputy and accompanied by a certificate that such officer has the custody.

RH-4036. Briefs. Briefs may be filed within ten (10) days after the close of the hearing provided, however, that the Director may, upon written application, grant an additional period of time not in excess of sixty (60) days within which briefs may be filed.

RH-4037. Findings and Order. The Director shall, after reviewing the entire record of the hearing, make his/her findings and enter his/her order. The findings and order shall be in writing and shall contain a statement of findings and conclusions upon all material issues of fact and law and shall be signed by the Director. The original thereof shall be filed as a part of the record of the case which shall be retained in the custody of the Director unless an appeal is taken therefrom and one certified copy of the findings and order shall be served on all parties to the proceeding.

RH-4038. Appeals from Decision of Director. Any person who is aggrieved by any ruling, decision, or action of the Director may appeal to the State Board of Health within thirty (30) days after service of said ruling, decision, or action by filing with the President of the State Board of Health a written complaint setting out the ruling, decision, or action complained of, the reason that such person is aggrieved and the relief sought by such person. A copy of such complaint shall also be served by the appealing party upon any other party in interest. No new evidence shall be introduced and the appeal shall be tried upon the record prepared by the Director or Hearing Officer. Additional briefs and oral arguments may be granted by the State Board of Health. The State Board of Health may affirm the Findings and Order of the Director or may reverse, modify, or remand the case for further proceedings. Copies of the State Board of Health Order shall be served upon the parties in interest as provided in RH-4037 of this Regulation.

RH-4039. Waiver of Procedures. The parties to any hearing may agree to waive any one or more of the procedural steps which would otherwise precede the reaching of a final decision by the Department.

RH-4040. Public Records - Exceptions. Except as provided below, all records shall be deemed public records and shall be open to inspection by the public. The following are not to be considered public records which are available for public inspection:

a. Documents relating to personnel matters and medical and other personal information, which, under general government personnel practices, are not normally made public.

b. Intra-agency and inter-agency communications, including memoranda, reports, correspondence and staff papers prepared by members of the Department personnel or by any other government agency for use within the Department or within the executive branch of the Government.

c. Records and reports of investigations.

d. Documents classified as restricted data under the Atomic Energy Act of 1954, as amended, or classified under Executive Order of the President of the United States as restricted data.

e. Correspondence received in confidence by the Department relating to an alleged or possible violation of any statute, rule, regulation, order, license, registration, or permit.

RH-4040. (Cont'd)

f. Any other document involving matters of internal Department management.

g. Any other matter required by law to be kept confidential or not available to public inspection.

h. The Department may withhold any document or part thereof from public inspection if disclosure of its contents is not required in the public interest and would adversely affect the interest of a person concerned. Such withholding from public inspection shall not, however, affect the right of persons properly and directly concerned to inspect the document. Persons requesting that documents or information therein be withheld from public disclosure shall make prompt application identifying the material and giving the reasons. Where the applicant is responsible for the preparation of the document, he/she shall, insofar as is possible, segregate in a separate paper the information for which the special treatment is requested. The Department may honor the request upon a finding that public inspection is not required in the public interest and would adversely affect the interest of the person concerned. If the request is denied, the applicant will be notified thereof with a statement of the reasons.

RH-4041.
RH-4999. Reserved.

SECTION 6.
PARTICLE ACCELERATORS

PART A. GENERAL

RH-5000. Authority. Act 8 of Second Extraordinary Session of 1961, as amended.

RH-5001. Effective Date. January 1, 1972.

RH-5002. Purpose and Scope. These Regulations establish procedures for the licensing and the use of particle accelerators.

RH-5003. Fees. In accordance with Act 504 of 1987 - Codified as ACA 20-21 - Subchapter 2, annual fees for licensing shall be paid. Nonpayment of fees shall result in escalated enforcement action and/or revocation of license.

RH-5004. Communications. All communications concerning this Regulation shall be addressed to the Division of Radiation Control and Emergency Management, Arkansas Department of Health, 4815 West Markham, Mail Slot 30, Little Rock, Arkansas 72205-3867.

RH-5005.
RH-5099. Reserved

PART B.
DEFINITIONS

RH-5100. General Definitions. Additional definitions used only in a certain Part will be found in that Part.

a. Accelerator or Particle Accelerator - Any machine capable of accelerating electrons, protons, deuterons or other charged particles in a vacuum and of discharging the resultant particulate or other radiation into a medium at energies usually in excess of 1 MeV.

b. Accelerator License - Except where otherwise specified, a license issued pursuant to these Regulations.

c. Approved qualified expert - An individual who has, prior to offering health physics services, registered with and has demonstrated to the satisfaction of the Department that he/she possesses the knowledge and training to measure ionizing radiation parameters, to evaluate safety techniques, and to advise regarding radiation protection matters.

d. Calibration - The determination of the response or reading of an instrument relative to a series of known radiation values over the range of the instrument, or the strength of a source of radiation relative to a standard.

e. Department - Arkansas Department of Health.

f. High Radiation Area - Any area in which there exists radiation at such levels that a major portion of the body could receive in any one (1) hour a dose in excess of 100 millirems.

g. Human use - The internal or external administration of radiation or radioactive material to human beings.

h. Individual - Any human being.

i. Industrial radiography - The examination of the structure of materials by non-destructive methods utilizing a particle accelerator.

j. Interlock - A device for precluding access to an area of radiation hazard either by preventing entry or by automatically removing the hazard.

k. Licensee - Any person who is licensed by the Department in accordance with these Regulations and the Act.

RH-5100. (Cont'd)

l. Misadministration - A therapy radiation dose from a particle accelerator such that errors in time of exposure or dose rate and/or treatment geometry result in a calculated total treatment dose differing from the final prescribed total treatment dose by more than ten (10) percent.

m. Operator - A person qualified by training and experience to assume responsibility for the safe operation of a particle accelerator.

n. Person - Any individual, corporation, partnership, firm, agency, political subdivision or agency thereof and any legal successor, representative, agent or agency of the foregoing, other than the U.S. Nuclear Regulatory Commission and other federal government agencies.

o. Personnel monitoring equipment - Devices designed to be worn or carried by an individual for the purpose of estimating the dose received by the individual (e.g., film badges, pocket chambers, pocket dosimeters, film rings, thermoluminescent dosimeters, et al).

p. Radiation - Ionizing radiation, i.e., gamma rays and x-rays, alpha and beta particles, high speed electrons, neutrons and other nuclear particles; but not sound or radio waves or visible, infrared, or ultraviolet light.

q. Radiation Safety Officer - That individual who is responsible for the radiation protection program.

r. Research and Development:

1. Theoretical analysis, exploration, or experimentation; or

2. The extension of investigative findings and theories of a scientific or technical nature into practical application for experimental and demonstration purposes, including the experimental production and testing of models, devices, equipment, materials, and processes.

Research and Development, as used in this Regulation, does not include the external administration of radiation to human beings.

s. Test - The process of verifying compliance with an applicable regulation.

t. These Regulations - Section 6 of the Rules and Regulations for Control of Sources of Ionizing Radiation of the State Board of Health, Standards for Protection Against Radiation.

RH-5101. RH-5199. Reserved.

PART C.
LICENSES

RH-5200. License Requirement. No person shall receive, possess, use, transfer, own or acquire a particle accelerator except as authorized in a license issued pursuant to these Regulations or as otherwise provided in these Regulations.

RH-5201. Licensing Procedures.

a. Application for accelerator licenses shall be filed on forms supplied by the Division of Radiation Control and Emergency Management, Arkansas Department of Health, 4815 West Markham, Mail Slot #30, Little Rock, Arkansas 72205-3867. The application shall set forth all applicable information called for by the form.

b. The Department may at any time after the filing of the original application and before the expiration of the license, require further statements in order to enable the Department to determine whether the license should be modified or revoked.

c. Each application shall be signed by the applicant licensee or an individual duly authorized to act for and or on his/her behalf.

d. In his/her application, the applicant may incorporate, by reference, information contained in previous applications, statements or reports filed with the Department: Provided, that such references are clear and specific.

e. Applications and documents submitted to the Department may be made available for public inspection except that the Department may withhold any document or part thereof from public inspection if disclosure of its contents is not required in the public interest and would adversely affect the interest of a person concerned.

f. The Department may verify information contained in applications and secure additional information deemed necessary to make a reasonable determination as to whether to issue a license and whether special conditions should be attached thereto by visiting the facility or location where a particle accelerator would be located and used and by discussing details of proposed use of the particle accelerator with the applicant or his/her designated representative.

RH-5201. (Cont'd)

g. Every person possessing a particle accelerator on the effective date of these Regulations shall have a period of ninety (90) days in which to make application for a license.

RH-5202. General Requirements for the Issuance of a License for Particle Accelerators. A license application will be approved if the Department determines that:

a. The applicant is qualified by reason of training and experience to use the accelerator in question for the purpose requested in accordance with these Regulations and Section 3 in such a manner as to minimize danger to public health and safety or property; and

b. The applicant's proposed equipment, facilities, operating and emergency procedures are adequate to protect health and minimize danger to public health and safety or property; and

c. The issuance of the license will not be inimical to the health and safety of the public; and the applicant satisfies any applicable special requirements in RH-5203 of these Regulations.

RH-5203. Special Requirements for Issuance of a License for Particle Accelerators.

a. Human use of particle accelerators in medical institutions. In addition to the requirements set forth in Part C, RH-5202, a license for use of a particle accelerator in medical institutions will be issued only if:

1. Whenever deemed necessary by the Department, the applicant has appointed a medical committee of at least three members to evaluate all proposals for research, diagnostic and therapeutic use of a particle accelerator within that institution. Membership of the committee should include physicians expert in internal, hematology, therapeutic radiology and a person experienced in depth dose calculations and protection against radiation.

2. The individuals designated on the application as the users have substantial experience in deep therapy techniques or in the use of particle accelerators to treat humans.

3. The individual designated on the application as the user must be a physician.

4. Whenever deemed necessary by the Department, the applicant has developed a training program for particle accelerators operators in accordance with the provisions of RH-5411.

b. Use of particle accelerators in research and development. In addition to the requirements of Part C, RH-5202, a license for the use of a particle accelerator in research and development will be issued only if:

1. The applicant and/or his or her staff have substantial experience in the use of particle accelerators for a variety of research and development uses;

2. The applicant has appointed a Radiation Safety Officer;

3. Whenever deemed necessary by the Department, the applicant has established a Radiation Safety Committee to approve, in advance, proposals for uses of particle accelerators in research and development; and

4. When deemed necessary by the Department, the applicant has developed a training program for particle accelerator operators in accordance with the provisions of RH-5411.

c. Particle accelerators for the production of radioactive materials. In addition to the requirements of Part C, RH-5202, a license for the use of a particle accelerator to produce multiple quantities or types of radioactive material will be issued only if:

1. The applicant and/or his or her staff has substantial experience in the use of particle accelerators to produce a variety of radioactive materials;

2. The applicant has appointed a Radiation Safety Officer;

3. The applicant has an adequate training program for particle accelerator operators in accordance with the provisions of RH-5411; and

4. The applicant has applied for a radioactive material license in accordance with the requirements of Section 2 of these Regulations.

RH-5203. (Cont'd)

d. Use of particle accelerators in industrial radiography. In addition to the requirements of Part C, RH-5202, a license for the use of a particle accelerator in industrial radiography will be issued only if:

1. The applicant will have an adequate program for training radiographers and radiographers assistants in accordance with the provisions of RH-5411;

2. The applicant has appointed a Radiation Safety Officer; and

3. The applicant has established and submits to the Department satisfactory written operating and emergency procedures as described in RH-5409.

RH-5204. Issuance of Particle Accelerator Licenses.

a. Upon a determination that an application meets the requirements of the Act and the Regulation of the Department, the Department will issue a specific license authorizing the proposed activity in such form and containing such conditions and limitations as it deems appropriate or necessary to effectuate the purposes of the Act.

b. The Department may incorporate in any license at the time of issuance, or thereafter by appropriate rule, regulation or order, such additional requirements and conditions with respect to the licensee's use of a particle accelerator as it deems appropriate or necessary in order to:

1. Protect health or to minimize danger to life or property;

2. Require such reports and the keeping of such reports and to provide for such inspection of activities under the license as may be necessary or appropriate to effectuate the purposes of the Act and Regulations thereunder.

RH-5205. Specific Terms and Conditions of Licenses.

a. Each license issued pursuant to this Regulation shall be subject to all the provisions of the Act now or hereafter in effect and to all rules, regulations, and orders of the Department.

b. Neither the license nor any right under the license shall be assigned or otherwise transferred in violation of the provisions of the Act.

c. Each person licensed by the Department pursuant to this Regulation shall confine his/her use and possession of the particle accelerator licensed to the locations and purposes authorized in the license. Any change in facility or location must be approved by the Department.

d. Bankruptcy Notification.

1. Each licensee shall notify the Department, in writing, immediately following the filing of a voluntary or involuntary petition for bankruptcy under any Chapter of Title II (Bankruptcy) of the United States Code by or against:

A. The licensee;

B. An entity [as that term is defined in 11 U.S.C. 101(14)] controlling the licensee or listing the license or licensee as property of the estate; or

C. An affiliate [as that term is defined in 11 U.S.C. 101 (2)] of the licensee.

2. This notification must indicate:

A. The bankruptcy court in which the petition for bankruptcy court was filed; and

B. The date of the filing of the petition.

RH-5206. Expiration of Licenses. Except as provided in Part C, RH-5207, each accelerator license shall expire at the end of the day, in the month and year stated therein.

RH-5207. Renewal of License.

a. Application for renewal of an accelerator license shall be filed in accordance with Part C, RH-5201.

b. In any case in which a licensee, not less than thirty (30) days prior to expiration of this existing license, has filed an application in proper form for renewal or for a new license authorizing the same activities, such existing license shall not expire until the application has been finally approved or disapproved by the Department.

RH-5208. Amendment of License at Request of Licensee. Applications for amendment of a license shall be filed in accordance with Part C, RH-5201 and shall specify the amendments desired and the reasons therefore.

RH-5209. Department Action on Application to Renew or Amend. In considering an application by a licensee to renew or amend his/her license, the Department will apply the criteria set forth in Part C, RH-5202 and RH-5203, as applicable.

RH-5210. Inalienability of Licenses. No license issued or granted under these Regulations and no right to utilize a particle accelerator granted by any license issued pursuant to this Regulation shall be transferred, assigned, or in any manner disposed of either voluntarily or involuntarily, directly or indirectly, through transfer of control of any license to any person unless the Department shall, after securing full information, find that the transfer is in accordance with the provisions of the Act and shall give its consent in writing.

RH-5211. Modification, Revocation, and Termination of Licenses.

a. The terms and conditions of all licenses shall be subject to amendment, revision of modification or the license may be suspended or revoked by reason of amendments to the Act, or by reason of rules, regulations and orders issued by the Department.

b. Any license may be revoked, suspended or modified, in whole or in part, for any material false statement in the application or any statement of fact required under provisions of the Act or of this Regulation, or because of conditions revealed by such application or statement of fact or any report, record or inspection or other means

RH-5211. (Cont'd)

which would warrant the Department to refuse to grant a license on an original application, or for violation of, or failure to observe any of, the terms and conditions of the Act, or the license, or of any rule, regulation or order of the Department.

c. Except in cases of willful violation or those in which the public health, interest or safety required otherwise, no license shall be modified, suspended or revoked unless, prior to the institution of proceedings therefore, facts or conduct which may warrant such action shall have been called to the attention of the licensee in writing and the licensee shall have been accorded opportunity to demonstrate or achieve compliance with all lawful requirements.

d. The Department may terminate a specific license upon request submitted by the licensee to the Department in writing.

RH-5212.
RH-5299. Reserved.

PART D.
EXCLUSIONS FROM LICENSING

RH-5300. Excluded Devices.

a. The following devices are exempt from the licensing requirements of these Regulations:

1. Electrical equipment that produces radiation incidental to its operation for other purposes, but does not produce radiation at the point of nearest approach such that there is a reasonable likelihood that any individual will receive a radiation dose to the whole body, head and trunk, gonads or lens of the eye in excess of 0.5 rems in a year; and

2. Those radiation machines that are covered under the provisions of Section 1 of these Regulations.

RH-5301. Excluded Possessors.

a. Common and contract carriers are exempt from the requirement to license to the extent that they transport or store particle accelerators in the regular course of their carriage for another or storage incident thereto.

b. Any U.S. Nuclear Regulatory Commission contractor or subcontractor of the following categories operating within this State is exempt from this Part to the extent that such contractor or subcontractor under his/her contract receives, possesses, uses, transfers, owns or acquires particle accelerators:

1. Prime contractors performing work for the U.S. Department of Energy at the U.S. Government-owned or controlled sites;

2. Prime contractors performing research in or development, manufacture, storage, testing or transportation of, atomic weapons or components thereof;

3. Prime contractors using or operating nuclear reactors or other nuclear devices in a U.S. Government-owned vehicle or vessel; and

RH-5301. (Cont'd)

4. Any other prime contractor or subcontractor, when the state and the NRC jointly determine that under the terms of the contract or subcontract, there is adequate assurance that the work thereunder can be accomplished without undue risk to the public health and safety and that the exemption of such contractor or subcontractor is otherwise appropriate.

RH-5302.
RH-5399. Reserved.

PART E.
RADIATION SAFETY REQUIREMENTS FOR THE USE OF PARTICLE ACCELERATORS

RH-5400. General Provisions.

a. This Part establishes radiation safety requirements for the use of particle accelerators. The provisions of this Part are in addition to, and not in substitution for, other applicable provisions of these Regulations set out in Sections 1 and 3.

b. The Department may waive compliance with the specific requirements of this Part by an existing accelerator or installation if:

1. Such compliance would require replacement or substantial modification of the accelerator or installation; and

2. The licensee demonstrates to the Department's satisfaction achievement through other means of radiation protection equivalent to that required by these Regulations.

c. The licensee shall be responsible for assuring that all requirements of this Part are met.

RH-5401. Limitations.

a. No licensee shall permit any person(s) to act as an accelerator operator until such person(s):

1. Has been instructed in the subjects in RH-5410 and shall have demonstrated an understanding thereof;

2. Has received copies of and instructions in this Part and the applicable requirements of Section 3, pertinent license conditions and the licensee's operating and emergency procedures, and shall have demonstrated understanding thereof; and,

3. Has demonstrated competence to use the particle accelerator, related equipment and survey instruments which will be employed in his/her assignment.

RH-5401. (Cont'd)

b. Either the Radiation Safety Committee or the Radiation Safety Officer shall have the authority to terminate the operations at an accelerator facility if such action is deemed necessary to protect health and minimize danger to public health and safety or property.

RH-5402. Shielding Requirements.

a. An approved qualified expert shall be consulted in the design of a particle accelerator installation and called upon to perform a radiation survey when the accelerator is first capable of producing radiation.

b. Each accelerator installation shall be provided with such primary and/or secondary barriers as are necessary to assure compliance with RH-1200 and RH-1208.

RH-5403. Accelerator Controls and Interlock Systems.

a. Instrumentation, readouts, and controls on the accelerator control console shall be clearly identified and easily discernible.

b. All entrances into a target room or other high radiation area shall be provided with safety interlocks that shut down the machine under conditions of barrier penetration.

c. When an interlock system has been tripped, it shall only be possible to resume operation of the accelerator by manually resetting controls at the position where the interlock has been tripped and lastly at the main control console.

d. Each safety interlock shall be on an independent single circuit and shall operate independently of all other safety interlocks.

e. All safety interlocks shall be fail safe, i.e., designed so that any defect or component failure in the interlock system prevents operation of the accelerator.

f. A scram button or other emergency power cut-off switch shall be located and easily identifiable in all high radiation areas. Such a cut-off switch shall include a manual reset so that the accelerator cannot be restarted from the accelerator control console without resetting the cut-off switch.

RH-5404. Warning Devices.

a. All locations designated as high radiation areas and entrances to such locations shall be equipped with easily observable flashing or rotating warning lights that operate when, and only when, radiation is being produced.

b. Except in facilities designed for human exposure, each high radiation area shall have an audible warning device which shall be activated for fifteen (15) seconds prior to the possible creation of such high radiation area. Such warning device shall be clearly discernible in all high radiation areas.

c. Barriers, temporary or otherwise, and pathways leading to high radiation areas, shall be identified in accordance with RH-1303.

RH-5405. Operating Procedures.

a. Particle accelerators, when not in operation, shall be secured to prevent unauthorized use.

b. Only a switch on the accelerator control console shall be routinely used to turn the accelerator beam on and off. The safety interlock system shall not be used to turn off the accelerator beam except in an emergency.

c. All safety and warning devices, including interlocks, shall be checked for proper operability at intervals not to exceed three (3) months. Results of such tests shall be maintained at the accelerator facility.

d. Electrical circuit diagrams of the accelerator and the associated interlock systems shall be kept current and on file at each accelerator facility.

e. If for any reason, it is necessary to intentionally bypass a safety interlock or interlocks, such action shall be:

1. Authorized by the Radiation Safety Committee and/ or the Radiation Safety Officer;

2. Recorded in a permanent log and a notice posted at the accelerator control console; and

3. Terminated as soon as possible.

f. Deleted.

RH-5406. Personnel Monitoring Requirements.

a. The Radiation Safety Officer shall supply appropriate personnel monitoring devices and shall require the use of such devices in accordance with the provisions of RH-1301.

b. Each licensee shall maintain records showing the radiation exposures of all individuals for whom personnel monitoring is required under RH-1301. Such records shall be kept in accordance with the provisions of RH-1500.

RH-5407. Radiation Monitoring Requirements.

a. There shall be available at each accelerator facility, appropriate portable monitoring equipment which is operable and has been calibrated for the appropriate radiations being produced at the facility. Such equipment shall be tested for proper operation and calibrated for the appropriate radiations at intervals specified by the Department, after each servicing, and repair which could affect instrument calibration.

b. A radiation protection survey shall be performed and documented by a qualified expert specifically approved by the Department when changes have been made in shielding, operation, equipment, or occupancy of adjacent areas; and periodically to check for unknown changes and malfunctioning equipment.

c. Radiation levels in all high radiation areas shall be continuously monitored. The monitoring devices shall be electrically independent of the accelerator control and safety interlock system. The monitoring devices shall be capable of providing a remote and local readout with visual and/or audible alarms at both the control panel and monitoring stations. The monitoring devices shall be set to activate at a level at least 100 mrem/hr.

d. All area monitors shall be checked for proper operation before each day of use.

e. Whenever applicable, periodic surveys shall be made to determine the amount of airborne particulate radioactivity present in areas of airborne hazards.

f. Whenever applicable, periodic smear surveys shall be made to determine the degree of contamination in target and scattering chamber areas.

g. All area surveys shall be made in accordance with the written procedures established by a qualified expert, specifically approved by the Department or the Radiation Safety Officer of the accelerator facility.

RH-5407. (Cont'd)

h. Records of all radiation protection surveys, calibration results, instrumentation tests and smear results shall be kept current and on file at each accelerator facility.

RH-5408. Ventilation and Waste Disposal Systems.

a. Adequate ventilation shall be accomplished in irradiated areas where exposures to airborne radioactivity exceed the limits specified in RH-2200, Appendix A, Table I.

b. A licensee shall not vent, release or otherwise discharge airborne radioactive materials from irradiated areas to an uncontrolled area which exceed the limits specified in RH-2200, Appendix A, Table II, except as authorized pursuant to RH-1401. For purposes of this Paragraph, concentrations may be averaged over a period not greater than one (1) year.

c. All solid and liquid radioactive wastes produced at an accelerator facility must be disposed of in accordance with the provisions of RH-1402 and RH-1403.

RH-5409. Operating and Emergency Procedures.

a. The licensee's operating and emergency procedure shall include instructions in at least the following:

1. The use of particle accelerators such that no person is likely to be exposed to radiation doses in excess of the limits established in Section 3 "Standards for Protection Against Radiation";

2. Methods and occasions for conducting radiation surveys;

3. Personnel monitoring and the use of personnel monitoring equipment;

4. Minimizing exposures to persons in the event of an accident;

5. Safety procedures to be employed whenever an interlock has been either tripped or intentionally bypassed;

6. The procedures for notifying proper persons in the event of an accident; and

7. Maintenance of records.

RH-5410. Minimum Subjects to be Covered in Training Operators.

a. Fundamentals of Radiation Safety.

1. Characteristics of particulate and electromagnetic radiation.

2. Units of radiation dose and quantity of radioactivity.

3. Biological hazards of exposure to radiation.

4. Measurement of radiation.

5. Methods of controlling radiation dose.

6. Radiation safety procedures, interlock systems and warning systems.

b. Fundamentals of Radiation Safety.

1. Use of radiation survey instruments.

2. Survey technique.

3. Use of personnel monitoring equipment.

c. Equipment.

1. Remote handling equipment.

2. Handling of activated materials.

3. Use of shielding.

RH-5411. Minimum Training Program for Particle Accelerator Operators.

a. A training program for accelerator operators should consist of at least the following:

1. Initial training;

2. Periodic training;

3. On-the-job training; and

4. A means to be used by the licensee to determine the operator's knowledge and understanding of and ability to comply with, Department Regulations and requirements, and the operating and emergency procedures of the applicant.

RH-5412.- RH-5499. Reserved.

PART F.
EXEMPTIONS, ADDITIONAL REQUIREMENTS, INSPECTIONS, AND TESTS

RH-5500. Exemptions.

The Department may, upon application therefore, or upon its own initiative, grant such exemptions or exceptions from the requirements of this Regulation as it determines are authorized by law and will not result in undue hazard to public health and safety or property.

RH-5501. Additional Requirements.

The Department may, by rule, regulation or order, impose upon any licensee such requirements in addition to those established in these Regulations as it deems appropriate or necessary to minimize danger to public health and safety or property.

RH-5502. Inspections.

a. Each licensee and registrant shall afford the Agency at all reasonable times opportunity to inspect sources of radiation and the premises and facilities wherein such sources of radiation are used or stored.

b. Each licensee and registrant shall make available to the Agency for inspection, upon reasonable notice, records maintained pursuant to these Regulations.

RH-5503. Tests. Each licensee and registrant shall perform upon instructions from the Department or shall permit the Department to perform, such reasonable tests as the Department deems appropriate or necessary including, but not limited to, tests of:

a. Sources of radiation;

b. Facilities wherein sources of radiation are used or stored;

c. Radiation detection and monitoring instruments; and

d. Other equipment and devices used in connection with utilization or storage of licensed or registered sources of radiation.

RH-5504. Records and Reports of Misadministration.

a. When a misadministration occurs the licensee shall notify the Department by telephone. The licensee shall also notify the referring physician of the affected patient and the patient or a responsible relative (or guardian), unless the referring physician agrees to inform the patient or believes, based on medical judgment, that telling the patient or the patient's responsible relative (or guardian) would be harmful to one or the other, respectively. These notifications must be made within 24 hours after the licensee discovers the misadministration. If the referring physician, patient, or the patient's responsible relative (or guardian) cannot be reached within 24 hours, the licensee shall notify them as soon as practicable. The licensee is not required to notify the patient or patient's responsible relative (or guardian) without first consulting the referring physician; however, the licensee shall not delay medical care for the patient because of this.

b. Within fifteen (15) days after an initial therapy misadministration report to the Department, the licensee shall report, in writing, to the Department and to the referring physician, and furnish a copy of the report to the patient or the patient's responsible relative (or guardian) if either was previously notified by the licensee under RH-5504.a. The written report must include the licensee's name; the referring physician's name; a brief description of the event; the effect on the patient; the action taken to prevent recurrence; whether the licensee informed the patient or the patient's responsible relative (or guardian), and if not, why not. The report must not include the patient's name or other information that could lead to identification of the patient.

c. Each licensee shall retain a record of each misadministration for ten years. The record must contain the names of all individuals involved in the event (including the physician, allied health personnel, the patient, and the patient's referring physician), the patient's social security number or identification number if one has been assigned, a brief description of the event, the effect on the patient, and the action taken, if any, to prevent recurrence.

d. Aside from the notification requirement, nothing in this Section affects any rights or duties of licensees and physicians in relation to each other, patients, or responsible relatives (or guardians).

RH-5505.
RH-5599. Reserved.

PART G.
ENFORCEMENT

RH-5600. Violations.

a. Any person who violates any of the provisions of the Act or rules, regulations or orders in effect pursuant thereto of the Department, shall, upon conviction thereof, be punished by a fine not less than one hundred dollars ($100.00) nor more than two thousand dollars ($2,000.00) or by imprisonment for not more than six (6) months, or be both so fined and imprisoned.

Impounding.

a. Sources of radiation shall be subject to impounding pursuant to Section 5 of these Regulations.

RH-5601.
RH-5999. Reserved.

SECTION 7.
NATURALLY OCCURRING RADIOACTIVE MATERIAL
(NORM)

PART A. GENERAL

RH-6000. Authority. Act 8 of the Second Extraordinary Session of 1961 as amended (ACA 1987 Title 20 Chapter 21.)

RH-6001. Effective Date. The provisions and requirements of this Section shall take effect on June 1, 1992 and shall apply to all facilities or sites owned or controlled by a person on that date. Products distributed and disposals made prior to that date are not subject to the provisions of this section.

RH-6002. Purpose. This Section establishes radiation protection standards for the possession, use, transfer, and disposal of naturally occurring radioactive materials (NORM) not subject to regulation by the U.S. Nuclear Regulatory Commission.

RH-6003. Scope. These Regulations apply to any person who engages in the extraction, mining, beneficiating, processing, use, transfer, or disposal of NORM in such a manner as to alter the chemical properties or physical state of the NORM or its potential exposure pathway to humans.

The Regulations in this Section address the introduction of NORM into products in which neither the NORM nor the radiation emitted from the NORM is considered to be beneficial to the products. The manufacture and distribution of products containing NORM in which the NORM and/or its associated radiation(s) is considered to be a beneficial attribute are licensed under the provisions of Section 2. This Section also addresses waste management and disposal standards.

PART B.
DEFINITIONS

RH-6004. General Definitions. As used in this Section, the following definitions apply:

a. Beneficial attribute or beneficial to the product - The radioactivity of the product is necessary to the use of the product.

b. Beneficiating - The processing of materials for the purpose of altering the chemical or physical properties to improve the quality, purity, or assay grade.

c. Breathing zone - Used in determining respiratory requirements, the area of the body within one (1) foot of the mouth and nose of a worker.

d. Confirmatory survey - A survey by the potential general licensee of potentially contaminated land, equipment, or sites in order to establish, with reasonable certainty, the absence or magnitude of NORM contamination.

e. Designated facility - A specific-licensed facility capable of receiving NORM shipments for the purpose of processing, storage, or disposal of NORM.

f. Department - Arkansas Department of Health.

g. Dose commitment - The total radiation dose to a section of the body that will result from retention in the body of radioactive material. For purposes of estimating the dose commitment, it is assumed that from the time of intake the period of exposure to retained material will not exceed fifty (50) years.

h. General environment - The total terrestrial, atmospheric, and aquatic environments outside sites within which any activity, operation, or process authorized by a general or specific license issued under this Section is performed.

i. Licensing State - Means any State with regulations equivalent to the Suggested State Regulation for Control of Radiation relating to, and an effective program for, the regulatory control of NORM and which has been granted final designation by the Conference of Radiation Control Program Directors, Inc.

j. Major processor - A user processing, handling, or manufacturing radioactive material exceeding Type A quantities as unsealed sources or material, or exceeding four (4) times Type B quantities as sealed sources. Type A and B quantities are defined in RH-3100.j.

k. Natural radioactivity - Radioactivity of naturally occurring nuclides.

l. Naturally occurring radioactive material (NORM) - Any nuclide which is radioactive in its natural physical state (i.e., not man-made), but does not include byproduct, source, or special nuclear material.

m. NORM facility identification number - The number assigned by the Department to a specific facility of a NORM general licensee having more than one site possessing radioactive material exceeding the exemption criteria specified in RH-6005.

n. NORM field supervisor - An individual who answers to the corporate NORM RSO approved by the Department as being qualified to oversee radiation protection of workers after attending at least forty (40) hours of classroom training in NORM-related health physics and six (6) months documented on-the-job training with a Department-approved qualified third party Radiation Safety Officer.

o. NORM general license number - The number assigned by the Department to the generator or other responsible party possessing radioactive material exceeding the exemption criteria specified in RH-6005.

p. NORM Radiation Safety Officer (RSO) - An individual approved by the Department as being qualified to oversee radiation protection of workers after attending at least forty (40) hours of classroom training in NORM-related health physics and six (6) months documented on-the-the job training with a Department-approved qualified third party Radiation Safety Officer.

q. NORM surveyor - An individual who has completed at least sixteen (16) hours of classroom training and three (3) months documented on-the-job training in NORM-related surveying techniques and health physics approved by the State as being qualified to perform NORM confirmatory and release surveys at NORM job sites.

r. NORM waste management plan - The plan for the management, i.e., handling, interim storage and disposal, of NORM.

s. NORM worker - An individual who has completed at least eight (8) hours of classroom training in NORM-related health physics concerning the protection of the worker, hazards involved in dealing with NORM, and other subjects outlined in RH-6018.

RH-6004. (Cont'd)

t. Notifier - The person or party meeting the definition of a general licensee according to RH-6010 and therefore, subject to the notification requirement stated in RH-6010.a.1.

u. Product - Something produced, made, manufactured, refined, or beneficiated.

v. Regulations of the U.S. Department of Transportation - The regulations in 49 CFR Parts 100-189.

w. Release survey - The survey required to release either equipment or land for unrestricted use. A land release survey must be approved by the Department before land will be released for unrestricted use.

x. Working Level (WL) - Any combination of short-lived Radon decay products in one liter of air that will result in the ultimate emission of alpha particles with a total energy of 130 billion electron volts.

PART C.
EXEMPTIONS

RH-6005. Exemptions.

a. Persons who receive, possess, use, process, transfer, distribute, and dispose of NORM are exempt from the requirements of these Regulations if:

The materials contain or are contaminated at concentrations less than 5 picocuries per gram of Radium-226 and/or Radium-228, 0.05% by weight of Uranium or Thorium, or 150 picocuries per gram of any other NORM radionuclide, provided that these concentrations are not exceeded at any time.

b. Persons who receive products or materials containing NORM distributed in accordance with a specific license issued by the Department pursuant to RH-6022.c or an equivalent license issued by another Licensing State are exempt from these Regulations.

c. The manufacturing, distribution, use, and disposal of the following products/materials are exempt from the requirements of these Regulations:

1. Potassium and Potassium compounds which have not been isotopically enriched in the radionuclide K-40; and

2. Brazil nuts.

d. The wholesale and retail distribution (including custom blending), possession, and use of the following products/ materials are exempt from the requirements of these Regulations:

1. Phosphate and potash fertilizer;

2. Phosphogypsum for agricultural uses if it has not been technologically enhanced; and

3. Materials used for building and highway construction if such materials contain NORM which has not been technologically enhanced.

e. The possession and use of natural gas and natural gas products and crude oil and crude oil products as fuel are exempt from the requirements of these Regulations. The distribution of natural gas and crude oil and the manufacturing and distribution of natural gas and crude oil products are exempt from the specific license requirements of this Section but are subject to the general license requirements in RH-6010.

RH-6006.- RH-6009 Reserved.

PART D.
LICENSES

RH-6010. General License.

a. 1. A general license is hereby issued to mine, extract, receive, possess, own, use, process, and dispose of NORM not exempted in RH-6005 without regard to quantity. This general license does not authorize the manufacturing or distribution of products containing NORM in concentrations greater than those specified in RH-6005.a nor the disposal of wastes from other entities. Persons subject to the general license shall notify the Department by filing the Notification of a NORM Facility Form with the Department. The Notification of NORM Facility Form is available from the Department.

NOTE: The Department recommends a general licensee under RH-6010.a.1 conduct or arrange to have conducted a confirmatory survey to determine the extent and magnitude of the NORM contamination at the general licensee's facility.

2. Each general licensee performing on-site maintenance of contaminated facilities, sites, or equipment or the excavation of land shall establish and submit to the Department for approval, written procedures as outlined in RH-6019 to ensure worker protection and survey (or screening) of sites and equipment as outlined in RH-6018.

3. On-site maintenance is authorized only if the maximum radiation level does not exceed 2 millirem per hour at any accessible point of the work area.

b. Facilities and equipment contaminated with NORM in excess of the levels set forth in Appendix A of this Section, or if the maximum radiation exposure level exceeds 50 microroentgen per hour including background at any accessible point shall not be released for unrestricted use. The decontamination of equipment and facilities shall be performed only by persons specifically licensed by the Department or another Licensing State to conduct such work. Each general licensee shall establish for approval written procedures for the evaluation (or screening) of equipment, components, and facilities prior to release for unrestricted use to ensure that the levels in Appendix A of this Section are not exceeded.

c. No person shall transfer land for unrestricted use where the concentration of Radium-226 or Radium-228 in soil averaged over any 100 square meters exceeds the background level by more than:

1. 5 pCi/g, averaged over the first 15 cm of soil below the surface; and

2. 15 pCi/g, averaged over 15 cm thick layers of soil more than 15 cm below the surface.

d. Equipment contaminated with NORM is exempt from the requirements of these Regulations if the maximum radiation exposure level does not exceed 50 microroentgen per hour including background at any accessible point, and radioactive contamination levels do not exceed levels set forth in Appendix A of this Section.

e. The decontamination of equipment, facilities and land, as described in RH-6020.b shall only be performed by persons specifically licensed by the Department or another Licensing State to conduct such work.

f. 1. The transfer of NORM not exempt from these Regulations from one general licensee to another general licensee may be authorized by the Department if:

A. The equipment and facilities containing NORM are to be used by the recipient for the same purpose or at the same site;

B. The transfer of control or ownership of land containing NORM includes an annotation of the deed records to indicate the presence and quantity of NORM; or

C. The materials being transferred are ores or raw materials for processing or refinement.

2. Transfers made under RH-6010.f.1 do not relieve the general licensee who makes the transfer from the responsibilities of assessing the extent of NORM contamination or material present, evaluating the hazards of the NORM, informing the general licensee receiving the NORM of these assessments and evaluations, and maintaining records required by these Regulations.

RH-6010. (Cont'd)

g. Storage of NORM and NORM waste from remediation.

1. A general licensee is authorized to store NORM waste generated during remediation in a container for ninety (90) days from the date of generation. After such time, the NORM waste must be transferred to an authorized facility for the purposes of treatment, storage, or disposal unless otherwise exempted in writing by the Department.

2. To store NORM waste in an approved container for up to one (1) year from generation, a general licensee must first submit a written NORM waste management plan to the Department and receive authorization from the Department. The general licensee may store NORM waste in an approved container up to one (1) year [365 days] from generation under the written NORM waste management plan while waiting for Department determination unless otherwise exempted in writing by the Department.

RH-6011. Protection of Workers During Operations. Each person subject to the general license in RH-6010 or a specific license shall conduct operations in compliance with the standards for radiation protection set out in Section 2 and 3, except for releases of radioactivity in effluents, which shall be regulated by RH-6012 and disposal, which shall be governed by RH-6013.

RH-6012. Protection of the General Population from Releases of Radioactivity. Each person subject to the general license in RH-6010 or a specific license shall conduct operations such that concentrations of radioactive material which are released to the general environment in groundwater, surface water, air, soil, plants, and animals do not result in an annual dose above the limits specified in RH-1208 and RH-1209. Doses due to Radon-220, Radon-222, and their respective decay products, are excluded from these limits.

RH-6013. Disposal and Transfer of Waste for Disposal.

a. Each person subject to the general license in RH-6010 or a specific license shall manage and dispose of wastes containing NORM:

1. In accordance with the applicable requirements of the U.S. Environmental Protection Agency for disposal of such wastes;

RH-6013. (Cont'd)

2. By transfer of the wastes for disposal to a land disposal facility licensed by the U.S. Nuclear Regulatory Commission, an Agreement State, or a Licensing State; or

3. In accordance with alternate methods authorized by the Department upon application or upon the Department's initiative.

b. Records of disposal, including manifests, shall be maintained pursuant to the provisions of Section 3, Part E of these Regulations.

c. Transfers of waste containing NORM for disposal shall be made to a person specifically authorized to receive such waste.

RH-6014. Containers.

a. NORM and NORM waste shall be kept in a container that is in good and safe condition.

b. The licensee shall use a container made of, or lined with, materials that will not react with, or be incompatible with, the NORM waste to be stored so that the ability of the container to contain the waste is not impaired or compromised.

c. A container holding NORM waste shall always be closed and sealed during storage, except when it is necessary to add or remove waste.

d. A container holding NORM waste shall not be opened, handled, or stored in a manner that may rupture the container or cause it to leak.

e. At least quarterly, the licensee shall inspect areas where containers of NORM waste are stored, looking for leaking or deteriorating containers or containment systems Records of these inspections shall be made.

f. All containers of NORM waste shall be stacked in such a manner that each container identification label can be read from the access aisle or area.

RH-6014. (Cont'd)

g. Each container of NORM shall be labeled with the following information prior to storage:

1. Name and address of generator.

2. Type of material (i.e., sludge, scale, dirt, scrap metal, et cetera).

3. Date stored.

4. Microroentgen per hour exposure readings on contact and at one (1) meter. (These exposure readings shall be updated if NORM waste is added to the container.)

5. Labeled as Radioactive Material.

h. Records of inspections shall be maintained by the licensee for inspection by the Department for five (5) years.

RH-6015. Tanks Containing NORM. The licensee shall develop a schedule and procedure for assessing the condition of each tank containing NORM waste. The schedule and procedure must be adequate to detect cracks, leaks, corrosion and erosion that may lead to cracks, leaks, or wall thinning to less than the required thickness to maintain vessel integrity. Procedures for emptying a tank to allow entry, procedures for personnel protection, and inspection of the interior must be established when necessary to detect corrosion of the tank sides and bottom. The frequency of these inspections will be determined based on the type of NORM material being stored and the tank construction material and the type of erosion/corrosion that may exist.

RH-6016. Transportation of NORM. Transportation of NORM contaminated equipment and/or waste shall be subject to the applicable parts of Section 4 of these Regulations and the requirements listed below.

a. Each shipment of NORM waste and NORM contaminated equipment to a facility specifically licensed for treatment, decontamination, storage, or disposal shall be accompanied by a manifest.

b. The manifest form must consist of, at a minimum, the number of copies that will provide the licensee, each transporter, and the operator of the designated facility with one (1) copy each for their records with at least one (1) copy signed by all parties involved returned to the generator/shipper for their records.

c. General requirements.

1. A licensee who transports, or offers for transportation, NORM waste and/or NORM contaminated equipment to a facility specifically licensed for treatment, decontamination, storage, or disposal must prepare and sign sufficient copies of a manifest before transporting the NORM off-site.

2. A licensee must designate on the manifest one facility which is permitted to handle the NORM described on the manifest.

3. If the transporter is unable to deliver the NORM to the designated facility, the licensee must either designate another facility or instruct the transporter to return the NORM.

4. Licensees must provide a statement concerning the nature of the material and general guidelines for an emergency situation involving this waste to accompany the manifest on shipments and loads.

5. If the NORM is to be transported out-of-state, the licensee will be responsible for receiving the completed signed manifest from the out-of-state treatment, decontamination, storage, or disposal facility.

6. Before initiating the shipment, licensees shall obtain written confirmation of the acceptability of the NORM, NORM contaminated equipment, or NORM waste from the operation of the specifically licensed commercial facility. The confirmation must be maintained with the licensee's manifest records.

7. The licensee receiving the shipment is required to report to the Department and to the licensee initiating the shipment any discrepancies between the NORM actually received by the designated facility and the NORM described on the manifest, or any other irregularities, within fifteen (15) days. If the designated facility or receiving licensee is located outside the State of Arkansas, the generating or originating licensee must report the irregularities to the Department.

d. Required information.

1. The manifest must contain all of the following information prior to leaving the licensee's site:

A. The licensee's (generator's) name, mailing address, and telephone number;

B. The name, address, and telephone number of each transporter;

C. The name, address, telephone number, and NORM specific license number of the designated facility, if applicable;

D. The description of the waste(s) [e.g., scale soil, sludge, et cetera]; and

E. The total quantity of all NORM by units of weight in tons or pounds, and the type and number of containers as loaded into or onto the transport vehicle. If the weight is unknown, the volume and estimated weight should be provided.

2. The following certification must appear on the manifest, and must read, and be signed and dated by the licensee as follows:

"I hereby declare that the contents of this consignment are fully and accurately described above by proper shipping name and are classified, packed, marked and labeled, and are in all respects in proper condition for transport according to applicable international and national government regulations."

e. Use of the manifest.

1. The licensee must:

A. Sign and date the manifest certification by hand when the initial transporter accepts the shipment;

B. Obtain a handwritten signature of the initial transporter and date of the acceptance of the manifest; and

C. Retain one copy.

2. The licensee must give the transporter the remaining copies of the manifest.

3. The licensee must receive the fully signed copy of the manifest from the designated facility within 45 days from the delivery to the initial transporter. In the event the licensee does not receive the signed manifest, the licensee shall:

   A. Notify the Department within seven (7) days;

   B. Conduct an investigation into the reasons why the manifest was not received; and

   C. Report the results of the investigation to the Department.

f. Transporters.

1. A transporter may not accept NORM for transportation unless the NORM is accompanied by sufficient copies of a manifest properly prepared, with each copy signed and dated by the licensee and each previous transporter in accordance with these Regulations.

2. Before transporting the NORM, the transporter must sign and date each copy of the manifest acknowledging acceptance of the NORM from the licensee or previous transporter and return a signed copy to the licensee or previous transporter.

3. A transporter who delivers NORM to a designated facility or another transporter must obtain the signature and date of the accepting party and retain one copy of the manifest for their records.

g. The designated facility should fill out their portion of the manifest, retain a copy for their files, and send all remaining copies to the licensee no later than fifteen (15) days after delivery of the NORM waste or contaminated equipment.

RH-6017. Radiation Survey and Counting Instrumentation.

a. Survey instrumentation used at NORM sites shall consist of, but not be limited to, a minimum of the following:

1. Instrumentation to determine rates pursuant to this Section shall be capable of measuring 1 microroentgen per hour through at least 500 microroentgen per hour; and

2. Instrumentation utilized to determine potential contamination, whether wipe tests or airborne, pursuant to this Section shall be able to measure gross alpha (Radium-226) and gross beta (Radium-228) quantitatively.

b. Each radiation/contamination survey meter shall be calibrated:

1. At intervals not to exceed one (1) year, any time the instrument is found to respond inconsistently to a known source or shows any indication of physical damage, and after each instrument servicing;

2. At energies and radiation levels appropriate for use; and

3. So that accuracy within plus or minus twenty percent (±20%) of the true radiation level can be demonstrated on each scale.

RH-6018. Site Surveys and Training. This Section describes the requirements for confirmatory site release surveys, and the training required before an individual may use survey instruments to release a NORM site or previously NORM contaminated equipment.

a. Surveys.

1. Upon completion of land remediation operations or equipment decontamination, a confirmatory survey shall be performed to verify that NORM regulated in this Section is not present, and therefore, the land or equipment in question is exempt from the requirements of this Section pursuant to RH-6005.

2. Any survey submitted to the Department or kept by the specific licensee for review by the Department must include the qualifications of the individual performing the survey. Individuals performing and documenting surveys shall demonstrate understanding of the subjects outlined in RH-6018.b.

b. The following outline describes the subjects that individuals must demonstrate competence in prior to being approved as a NORM surveyor.

1. Fundamentals of Radiation Safety.

A. Characteristics of radiation.

B. Units of radiation dose and quantity of radioactivity.

C. Levels of radiation from sources of radiation.

D. Methods of minimizing radiation dose:

i. Working time.

ii. Working distance.

iii. Shielding.

iv. Respiratory precautions.

v. Use of anti-contamination clothing.

2. Radiation Detection Instrumentation to be Used:

A. Use of radiation survey instruments:

i. Operation

ii. Calibration

iii. Limitations

B. Survey techniques.

C. Use of personnel-monitoring equipment.

3. The Requirements of Pertinent State Regulations.

RH-6019. Worker Protection Plans.

A Worker Protection Plan must be submitted to the Department which includes, but may not be limited to, the following items:

a. Posting procedures. How an area will be posted to alert the general public of NORM contamination or NORM storage areas.

b. Dosimetry procedures/program. Including how determination of potential internal dose associated with NORM will be calculated (i.e., bioassay, whole body counting; et cetera).

c. Contamination control procedures. Including:

1. Personnel exit procedures from a NORM contaminated area (i.e., frisking, et cetera).

2. Protective clothing requirements depending on the work to be performed.

3. Instrumentation to be used by the licensee to perform surveys and counting procedures, including manufacturer, model number, type of survey meter or counting instrument, probe type, and ranges of detection as well as calibration certificates.

4. Surveying and Counting Procedures - This Section should include the proper procedure for personnel and equipment exit surveys, as well as procedures for land surveys, airborne contamination surveys (air sampling), and counting procedures. This Section should also include the licensee's action levels and limits, if more conservative than the Department's outlined in Section 3 or Section 7 of these Regulations.

5. Operational Procedures - This Section should encompass any operations that might involve the spread of NORM contamination or the potential for internal dose to the worker and how each operation should be handled.

6. Respiratory Protection Program - For operations that have a potential to produce NORM contaminated dusts (i.e., cutting, grinding, sandblasting, welding, drilling, polishing, or handling dry soil) or when loose contamination is suspected, the following additional items should be addressed in the Worker Protection Plan:

The use of a respirator appropriate for radioactive particulates shall be worn or engineering controls should be utilized to prevent the potential airborne contaminates.

7. ALARA Procedures - An explanation of how the licensee will attempt to maintain worker's exposure As Low As Reasonably Achievable with regard to engineering controls and the use of time, distance, and shielding.

d. Training Program. Including but not limited to the following requirements:

1. NORM Worker - Eight (8) Classroom Hours.

A. Fundamentals of Radiation Safety.

i. Characteristics of radiation.

ii. Units of radiation dose and definitions of radioactivity, including different sources of radioactivity (including NORM).

iii. Levels of radiation from different sources of radiation.

iv. Methods of minimizing radiation exposure dose.

(a) Working time

(b) Working distance

(c) Shielding

(d) Respiratory precautions

(e) Use of anti-contamination clothing

v. Use and types of personnel-monitoring equipment.

vi. Personnel exit contamination surveys, including meter operation and surveying techniques.

vii. Personnel general decontamination procedures.

viii. Biological effects of ionizing radiation (including effects on the embryo or fetus).

ix. Risks associated with working with NORM.

x. Requirements of pertinent State regulations concerning worker's rights and responsibilities.

2. Radiation Safety Officer - Forty (40) classroom hours plus six (6) months on-the-job training.

A. Fundamentals of Radiation Safety.

i. Characteristics of radiation.

ii. Units of radiation dose and definitions of radioactivity, including different sources of radioactivity (including NORM).

iii. Levels of radiation from different sources of radiation.

iv. Methods of minimizing radiation exposure dose.

(a) Working time

(b) Working distance

(c) Shielding

(d) Respiratory precautions

(e) Use of anti-contamination clothing

v. Use and types of personnel-monitoring equipment.

vi. Biological effects of ionizing radiation (including the effects on embryo or fetus).

vii. Risks associated with working with NORM.

viii. Requirements of pertinent State regulations concerning worker's rights and responsibilities.

B. Radiation Detection Instrumentation.

i. Use of survey instruments.

(a) Operation

(b) Calibration requirements

(c) Limitations

ii. Survey techniques.

(a) Personnel contamination surveys

(b) Equipment surveys

(c) Land surveys

(d) Documentation and record retention requirements

C. Use of counting instrumentation for wipes and air sample filter papers.

D. Personnel decontamination techniques.

E. Air sampling techniques and equipment.

F. Shipping requirements for NORM and NORM-contaminated equipment.

G. Pertinent State regulations.

H. Six (6) months on-the-job training with a State-qualified third party Radiation Safety Officer or Health Physicist documented.

3. NORM Field Supervisor - Forty (40) hours classroom and six (6) months on-the-job training.

A. Fundamentals of Radiation Safety.

i. Characteristics of radiation.

ii. Units of radiation dose and definitions of radioactivity, including different sources of radioactivity (including NORM).

iii. Levels of radiation from different sources of radiation.

iv. Methods of minimizing radiation exposure dose.

(a) Working time

(b) Working distance

(c) Shielding

(d) Respiratory precautions

(e) Use of anti-contamination clothing

v. Use and types of personnel-monitoring equipment.

vi. Biological effects of ionizing radiation including meter operation and surveying techniques.

vii. Risks associated with working with NORM.

viii. Requirements of pertinent State regulations concerning worker's rights and responsibilities.

B. Radiation Detection Instrumentation.

i. Use of survey instruments.

(a) Operation

(b) Calibration requirements

(c) Limitations

ii. Survey techniques.

(a) Personnel contamination surveys

RH-6019. (Cont'd)

(b) Equipment surveys

(c) Land surveys

(d) Documentation and record retention requirements

C. Use of counting instrumentation for wipes and air sample filter papers.

D. Personnel decontamination techniques.

E. Air sampling techniques and equipment.

F. Shipping requirements for NORM and NORM-contaminated equipment.

G. Pertinent State regulations.

H. Six (6) months on-the-job training with a State-qualified Radiation Safety Officer or Health Physicist documented.

RH-6020. Specific Licenses.

a. Unless otherwise exempted under the provisions of RH-6005 or licensed under the provisions of Section 2 of the Regulations, the manufacturing and distribution of any material or product containing NORM shall be specifically licensed pursuant to the requirements of this Section or pursuant to equivalent regulations of another Licensing State.

b. Persons conducting the following activities involving equipment or facilities contaminated with NORM in excess of the levels set forth in Appendix A of this Section or land contaminated in excess of the limits set forth in RH-6010 shall be specifically licensed pursuant to the requirements of this section:

1. Decontamination of equipment, facilities, and land; or

2. Disposal of the resulting waste.

RH-6021. Filing Application for Specific Licenses

a. Applications for specific licenses shall be filed in a manner and on a form prescribed by the Department.

b. The Department may at any time after the filing of the original application, and before the expiration of the license, require further statements in order to enable the Department to determine whether the application should be granted or denied or whether a license should be modified or revoked.

c. Each application shall be signed by the applicant or licensee or a person duly authorized to act for and on the licensee's behalf.

d. An application for a license may include a request for a license authorizing one or more activities.

e. In an application, the applicant may incorporate by reference information contained in previous applications, statements, or reports filed with the Department provided such references are clear and specific.

f. Applications and documents submitted to the Department may be made available for public inspection except that the Department may withhold any document or Part thereof from public inspection if disclosure of its contents is not required in the public interest and would adversely affect the interest of a person concerned.

RH-6022. Requirements for the Issuance of Specific Licenses.

a. A license application will be approved if the Department determines that:

1. The applicant is qualified by reason of training and experience to use the NORM in question for the purpose requested in accordance with these rules in such a manner as to minimize danger to public health and safety or property;

2. The applicant's proposed equipment, facilities, and procedures are adequate to minimize the danger to public health and safety or property;

3. The issuance of the license will not be inimical the health and safety of the public;

4. The applicant satisfies any applicable special requirements in this Part; and

5. The applicant has met the financial surety requirements of RH-6033.

b . An application for a specific license to decontaminate equipment and/or facilities contaminated with NORM in excess of the levels set forth in RH-6005.a., RH-6010.c., or Appendix A of this Part, as applicable, and to dispose of the resulting waste will be approved if:

1. The applicant satisfies the general requirements specified in RH-6022.a.; and

2. The applicant has adequately addressed the following items in the application:

A. Procedures and equipment for protection of workers:

B. An evaluation of the radiation levels and concentrations of contamination expected during normal operations;

C. Operating and emergency procedures, including procedures for waste reduction and quality assurance of items released for unrestricted use; and

D. Method of disposing of the NORM removed from contaminated equipment, facilities, and/or land.

c. An application for a specific license to manufacture and/or initially transfer products or materials containing NORM to persons exempted from these Regulations pursuant to RH-6005.b. will be approved if:

1. The applicant satisfies the general requirements specified in RH-6022.a. ;

2. The NORM is not contained in any food, beverage, cosmetic, drug, or other commodity designed for ingestion or inhalation by, or application to, human being; and

3. The applicant submits sufficient information relating to the design, manufacture, prototype testing, quality control procedures, labeling or marking, and conditions of handling, storage, use, and disposal of the NORM material or product to demonstrate that the material or product will meet the safety criteria set forth in RH-6023. The information shall include:

A. A description of the material or product and its intended use or uses;

B. The type, quantity, and concentration of NORM in each material or product;

C. The chemical and physical form of the NORM in the material or product, and changes in chemical and physical form that may occur during the useful life of the material or product;

D. An analysis of the solubility in water and body fluids of the NORM in the material or product;

E. The details of manufacture and design of the material or product relating to containment and shielding of the NORM and other safety features under normal and severe conditions of handling, storage, use, reuse, and disposal of the material or product;

F. The degree of access of human beings to the material or product during normal handling, use, and disposal;

G. The total quantity of NORM expected to be distributed annually in the material or product;

H. The expected useful life of the material or product;

I. The proposed method of labeling or marking each unit of the material or product with identification of the manufacturer and/or initial transferor of the product and the radionuclide(s) and quantity of NORM in the material or product;

J. The procedures for prototype testing of the material or product to demonstrate the effectiveness of the containment, shielding, and other safety features under both normal and severe conditions of handling, storage, use, reuse, and disposal;

K. The results of the prototype testing of the material or product, including any change in the form of the NORM contained in it, the extent to which the NORM may be released to the environment, any change in radiation levels, and any other changes in safety features;

L. The estimated external radiation doses and dose commitments relevant to the safety criteria in RH-6023 and the basis for such estimates;

M. A determination that the probabilities with respect to doses referred to in RH-6023 meet the safety criteria;

N. The quality control procedures to be followed in the production of production lots of the material or product, and the quality control standards the material or product will be required to meet; and

O. Any additional information, including experimental studies and tests, required by the Department to facilitate a determination of the radiation safety of the material or product.

d. Notwithstanding the provisions of RH-6023.b. , the Department may deny an application for a specific license if the end uses of the product are frivolous or cannot be reasonably foreseen.

RH-6023. Safety Criteria.

An applicant for a license under RH-6022.b. shall demonstrate that the product is designed and will be manufactured so that:

a. In normal use and disposal, it is unlikely that the external radiation dose in anyone year, or the dose commitment resulting from the intake of NORM, excluding the Radon and Radon decay products, in anyone year, to a suitable sample of the group of individuals expected to be most highly exposed to radiation or NORM from the material or product, will exceed the doses in Column I of RH-6024.

RH-6023. (Cont'd)

b. In normal handling and storage of the quantities of the material or product likely to accumulate in one location during marketing, distribution, installation, and servicing of the material or product, it is unlikely that the external radiation dose in anyone year, or the dose commitment resulting from the intake of NORM, excluding Radon, in anyone year, to a suitable sample of the group of individuals expected to be most highly exposed to radiation or NORM from the material or product, will exceed the doses in Column II of RH-6024.

c. In normal use, disposal, handiing, and storage, it is unlikely that the Radon released from the material or product will result in an increase in the average Radon concentration in air of more than 0.4 picocuries per liter.

d. It is unlikely that a significant reduction will occur in the effectiveness of the containment, shielding, or other safety features of the material or product (from wear and abuse in normal handling and use of the material or product during its useful life).

RH-6024 Table of Organ Doses

Part of Body	Column I* Dose in Rem	Column II* Dose in Rem
Whole body; head and trunk; active blood-forming organs; gonads, or lens of eye	0.005	0.5
Hands and forearms; feet and ankles; localized area of skin averaged over areas no larger than 1 square centimeter	0.075	7.5
Other organs	0.015	1.5

*** Dose limit is the dose above background from the product**

RH-6025. Issuance of Specific Licenses.

a. Upon determination that an application meets the requirements of the Act and rules of the Department, the Department will issue a specific license authorizing the proposed activity in such form and containing such conditions and limitations as it deems appropriate or necessary.

b. The Department may incorporate in any license at the time of issuance, or thereafter by amendment, such additional requirements and conditions with respect to the licensee's receipt. possession. use and transfer of NORM subject to this Section as it deems appropriate or necessary in order to:

1. Minimize danger to public health and safety of property;

2. Require such reports and the keeping of such records, and to provide for such inspections of activities under the license as may be appropriate or necessary; and

3. Prevent loss or theft of NORM subject to this section.

RH-6026 Conditions of Licenses Issued Under RH-6022.

a. General Terms and Conditions

1. Each license issued pursuant to this Section shall be subject to all the provisions of the Act, now or hereafter in effect, and to all rules, regulations, and orders of the Department.

2. No license issued or granted under this Section and no right to possess or utilize NORM granted by any license issued pursuant to this Section shall be transferred, assigned, or in any manner disposed of, either voluntarily or involuntarily, directly or indirectly, through transfer of control of any license to any person unless the Department shall, after securing full information, find that the transfer is in accordance with the provisions of the Act, and shall give its consent in writing.

3. Each person licensed by the Department pursuant to this Section shall confine use and possession of the NORM licensed to the locations and purposes authorized in the license.

4. Each person licensed by the Department pursuant to this Section is subject to the general license provisions of RH-6011, RH-6012, and RH-6013.

5. Bankruptcy (of Licensee)

A. Each licensee shall notify the Department, in writing, immediately following the filing of a voluntary or involuntary petition for bankruptcy under any Chapters of Title 11 (Bankruptcy) of the United States Code (11 U.S.C.) by or against:

i. A licensee:

ii. An entity [as that term is defined in 11 U.S.C. 101 (14)] controlling a licensee or listing the license or licensee as property of the estate; or

iii. An affiliate [as that term is defined in 11 U.S.C. 101(2)] of the licensee.

B. This notification must indicate:

i. The bankruptcy court in which the petition for bankruptcy was filed; and

ii. The date of the filing of the petition

b. Quality Control, Labeling, and Reports of Transfer. Each person licensed under RH-6022.c shall:

1. Carry out adequate control procedures in the manufacture of the material or product to assure that each production lot meets the quality control standards approved by the Department;

2. Label or mark each unit so that the manufacturer, processor, producer, or initial transferor of the material or product and the NORM in the material or product can be identified; and

RH-6026. (Cont'd)

3. Maintain records identifying, by name and address, each person to whom NORM is transferred for use under RH-6005.b. or the equivalent regulations of another Licensing State, and stating the kinds, quantities, and uses of NORM transferred. An annual summary report stating the total quantity of each radionuclide transferred under the specific license shall be filed with the Department. Each report shall cover the year ending December 31, and shall be filed within thirty (30) days thereafter. If no transfers of NORM have been made pursuant to RH-6022.c. during the reporting period, the report shall so indicate.

RH-6027. Expiration and Termination of License.

a. Except as provided in RH-6027.d.3. and RH-6028.b., each specific license shall expire at the end of the specified day in the month and year stated therein.

b. Each licensee shall notify the Department in writing and request termination of the license when the licensee decides to terminate all activities involving NORM authorized under the license. This notification and request for termination of the license must include the reports and information specified in RH-6027.d.I.D. The licensee is subject to the provisions of RH-6027.d. and e. as applicable.

c. No less than 30 days before the expiration date specified in a specific license, the licensee shall either:

1. Submit an application for license renewal under RH-6028; or

2. Notify the Department in writing, under RH-6027.b if the licensee decides to discontinue all activities involving NORM.

d. 1. If a licensee does not submit an application for license renewal under RH-6028 the licensee shall on or before the expiration date specified in the license:

A. Terminate use of NORM;

B. Remove NORM contamination to the extent practicable;

C. Properly dispose of NORM; and

D. Submit a report of disposal of NORM and radiation survey(s) to confirm the absence of NORM or to establish the levels of residual NORM contamination. The licensee shall, as appropriate:

i Report levels of radiation in units of microrads per hour of beta and gamma radiation at one (1) centimeter and gamma radiation at one meter from surfaces and report levels of radioactivity in units of disintegrations per minute (or microcuries) per 100 square centimeters removable and fixed on surfaces, microcuries per milliliter in water, and picocuries per gram in contaminated solids such as soils or concrete: and

ii. Specify the instrument(s) used and certify that each instrument is properly calibrated and tested.

2. If no radioactivity attributable to activities conducted under the license is detected. the licensee shall submit a certification that no detectable NORM contamination was found. If the Department determines that the information submitted under RH-6027.d.I.D and d.2 and is adequate and surveys confirm the findings. the Department will notify the licensee in writing that the license is terminated.

3. If detectable levels of residual NORM attributable to activities conducted under the license are found, the license continues in effect beyond the expiration date, if necessary, with respect to possession of residual NORM until the Department notifies the licensee in writing that the license is terminated. During this time, the licensee is subject to the provisions of

RH-6027.e. In addition to the information submitted under RH-6027.d.I.D, the licensee shall submit a plan, if appropriate, for decontaminating the location(s) and disposing of the residual NORM.

e. Each licensee who possesses residual NORM under RH-6027.d.3, following the expiration date specified in the license, shall:

1. Be limited to actions involving NORM related to preparing the location(s) for release for unrestricted use; and

2. Continue to control entry to restricted areas until the location(s) are suitable for release for unrestricted use and the Department notifies the licensee in writing that the license is terminated.

RH-6028. Renewal of Licenses.

a. Applications for renewal of specific licenses shall be filed in accordance with RH-6021.

b. In any case in which a licensee, not less than thirty (30) days prior to expiration of an existing license, has filed an application in proper form for renewal or for a new license authorizing the same activities, such existing license shall not expire until final action by the Department.

RH-6029. Amendment of Licenses at Request of Licensee.

Applications for amendment of a license shall be filed in accordance with RH-6021 and shall specify the respects in which the licensee desires the license to be amended and the grounds for such amendment.

RH-6030. Department Action on Applications to Renew and Amend.

In considering an application by a licensee to renew or amend the license, the Department will apply the criteria set for in RH-6022.

RH-6031. Modification and Revocation of Licenses.

a. The terms and conditions of all licenses shall be subject to amendment, revision, or modification or the license may be suspended or revoked by reason of amendments to the Act, or by reason of rules, regulations, and orders issued by the Department.

b. Any license may be revoked, suspended, or modified, in whole or in part, for any material false statement in the application or any statement of fact required under provisions of the Act, or because of conditions revealed by such application or statements of fact or any report, record, or inspection or other means which would warrant the Department to refuse to grant a license on an original application, or for violation of, or failure to observe any of the terms and conditions of the Act, or of the license, or of any rules, regulation, or order of the Department.

c. Except in cases of willfulness or those In which the public health, interest or safety requires otherwise, no license shall be modified, suspended, or revoked unless, prior to the institution of proceedings therefore, facts or conduct which may warrant such action shall have been called to the attention of the licensee in writing and the licensee shall have been accorded an opportunity to demonstrate or achieve compliance with all lawful requirements.

RH-6032. Vacating Premises.

Each specific licensee shall, no less than thirty (30) days before vacating or relinquishing possession or control of premises which may have been contaminated with Naturally Occurring Radioactive Material as a result of the activities, notify the Department in writing of intent to vacate. When deemed necessary by the Department, the licensee shall decontaminate the premises in such a manner as the Department may specify.

RH-6033. Financial Assurance and Recordkeeping for Decommissioning. Each specific licensee shall be subject to the financial assurance and recordkeeping for decommissioning under RH-409.h of these Regulations.

RH-6034.-
RH-6039. Reserved.

PART E.
RECIPROCITY

RH-6040. Reciprocal Recognition of Licenses. Subject to these regulations, any person who holds a specific license from a Licensing State, and issued by the agency having jurisdiction where the licensee maintains an office for directing the licensed activity and at which radiation safety records are normally maintained, is hereby granted a general license to conduct the activities authorized in such licensing document within this State for a period not in excess of 180 days in any calendar year provided that:

a. The licensing document does not limit the activity authorized by such document to specific installations or locations;

b. The out-of-state licensee notifies the Department in writing at least two (2) days prior to engaging in such activity. Such notification shall indicate the location period and type of proposed possession and use within the State, and shall be accompanied by a copy of the pertinent licensing document. If, for a specific case, the two (2) day period would impose an undue hardship on the out-of-state licensee, the licensee may, upon application to the Department, obtain permission to proceed sooner;

c. The out-of-state licensee complies with all applicable regulations of the Department and with all the terms and conditions of the licensing document, except any such terms and conditions which may be inconsistent with applicable regulations of the Department;

d The out-of-state licensee supplies such other information as the Department may request; and

e. The out-of-state licensee shall not transfer or dispose of NORM possessed or used under the general license provided in RH-6040.a except by transfer to a person:

1. Specifically licensed by the Department or by another Licensing State to receive such NORM; or

2. Exempt from the requirements for a license for such NORM under RH-6005.

RH-6050. Deleted

PART F.

APPENDIX A, SECTION 7

ACCEPTABLE SURFACE CONTAMINATION LEVELS FOR NORM

NUCLIDE[a]	AVERAGE[bcf]	MAXIMUM[bdf]	REMOVABIE[bcef]
U-nat, U-235, & U-238 and associated products.. (including Po-210) except Ra-226, Th-230, AC-227, and Pa-231	5,000 dpm alpha/100 cm^2	15,000 dpm alpha/100 cm^2	1,000 dpm alpha/100 cm^2
Ra-226, Ra-228, Th-230, Th-228, Pa-231, Ac-227	100 dpm/ 100 cm^2	300 dpm/ 100 cm^2	20 dpm/ 100 cm^2
Th-nat, Th-232, Ra-223, Ra-224, U-232	1,000 d pm/ 100 cm^2	3,000 dpm/ 100 cm^2	200 dpm/ 100 cm^2
Beta-gamma emitters (nuclides with decay modes other than alpha emission or spontaneous fission, including Pb-2I0), except others noted above.	5,000 dpm beta,gamma/ 100 cm^2	15,000 dpm, beta gamma/ 100 cm^2	1,000 dpm beta,gamma/ 100 cm^2

---

[a] Where surface contamination by both alpha and beta-gamma emitting nuclides exists, the limits established for alpha and beta-gamma emitting nuclides should apply independently.

[b] As used in this table, dpm (disintegrations per minute) means the rate of emission by radioactive material as determined by correcting the counts per minute observed by an appropriate detector for background, efficiency, and geometric factors associated with the instrumentation.

[c] Measurements of average contamination level should not be averaged over more than one square meter. For objects of less surface area, the average should be derived for each object.

[d] The maximum contamination level applies to an area of not more than 100 cm^2.

[e] The amount of removable radioactive material per 100 cm^2 of surface area should be determined by wiping that area with dry filter or soft absorbent paper, applying moderate pressure, and assessing the amount of radioactive material on the wipe with an appropriate instrument of known efficiency. When removable contamination on objects of less surface area is determined, the pertinent levels should be reduced proportionally and the entire surface should be wiped.

[f] The average and maximum radiation levels associated with surface contamination resulting from beta-gamma emitters should not exceed 0.2 mrad/hr at 1 cm and 1.0 mrad/hr at 1 cm, respectively, measured through not more than 7 milligrams per square centimeter of total absorber.

SECTION 8.
LICENSES AND RADIATION SAFETY REQUIREMENTS FOR IRRADIATORS

PART A. GENERAL

RH-7000. Reserved.

RH-7001. Purpose and Scope.

a. This Section contains requirements for the issuance of a license authorizing the use of sealed sources containing radioactive materials in irradiators used to irradiate objects or materials using gamma radiation. This Section also contains radiation safety requirements for operating irradiators. The requirements of this Section are in addition to and not in substitution for other requirements of these Regulations. Nothing in this Section relieves the licensee from complying with other applicable Federal, State and local regulations governing the siting, zoning, land use, and building code requirements for industrial facilities.

b. The Regulations in this Section apply to panoramic irradiators that have either dry or wet storage of the radioactive sealed sources and to underwater irradiators in which both the source and the product being irradiated are under water. Irradiators whose dose rates exceed 5 grays (500 rads) per hour at one (1) meter from the radioactive sealed sources in air or in water, as applicable for the irradiator type, are covered by this Section.

c. The Regulations in this Section do not apply to self-contained dry-source-storage irradiators (those in which both the source and the area subject to irradiation are contained within a device and are not accessible by personnel), medical radiology or teletherapy, radiography (the irradiation of material for nondestructive testing purposes), gauging, or open-field (agricultural) irradiation.

RH-7002. Definitions.

a. Annually - Either:

1. At intervals not to exceed one (1) year, or

2. Once per year, at about the same time each year (plus or minus one [1] month).

b. Doubly encapsulated sealed source - A sealed source in which the radioactive material is sealed within a capsule and that capsule is sealed within another capsule.

c. Irradiator - A facility that uses radioactive sealed sources for the irradiation of objects or materials and in which radiation dose rates exceeding 5 grays (550 rads) per hour exist at one (1) meter from the sealed radioactive sources in air or water, as applicable for the irradiator type, but does not include irradiators in which both the sealed source and the area subject to irradiation are contained within a device and are not accessible to personnel.

d. Irradiator operator - An individual who has successfully completed the training and testing described in RH-7051 and is authorized by the terms of the license to operate the irradiator without a supervisor present.

e. Panoramic dry-source-storage irradiator - An irradiator in which the irradiations occur in air in areas potentially accessible to personnel and in which the sources are stored in shields made of solid materials. The term includes beam-type dry-source-storage irradiators in which only a narrow beam of radiation is produced for performing irradiations.

f. Panoramic irradiator - An irradiator in which the irradiations are done in air in areas potentially accessible to personnel. The term includes beam-type irradiators.

g. Panoramic wet-source-storage irradiator - An irradiator in which the irradiations are done in air in areas potentially accessible to personnel and in which the sources are stored under water in a storage pool.

h. Pool irradiator - Any irradiator at which the sources are stored or used in a pool of water including panoramic wet-source-storage irradiators and underwater irradiators.

i. Product conveyor system - A system for moving the product to be irradiated to, from, and within the area where irradiation takes place.

j. Radiation room - A shielded room in which irradiations take place. Underwater irradiators do not have radiation rooms.

RH-7002. (Cont'd)

k. Radiation safety officer - An individual with responsibility for the overall radiation safety program at the facility.

l. Sealed source - Any radioactive material that is used as a source of radiation and is encased in a capsule designed to prevent leakage or escape of the byproduct material.

m. Seismic area - Any area where the probability of a horizontal acceleration in rock of more than 0.3 times the acceleration of gravity in 250 years is greater than ten (10) percent, as designated by the U.S. Geological Survey.

n. Underwater irradiator - An irradiator in which the sources always remain shielded under water and humans do not have access to the sealed sources or the space subject to irradiation without entering the pool.

RH-7003.
RH-7004. Reserved.

RH-7005. Interpretations.

Except as specifically authorized by the Department in writing, no interpretation of the meaning of the Regulations in this Section by any officer or employee of the Department, other than a written interpretation by the Department, will be recognized to be binding upon the Department.

RH-7006.
RH-7010. Reserved.

PART B.
SPECIFIC LICENSING REQUIREMENTS

RH-7011. Application for a Specific License.

A person, as defined in RH-1100.bc of these Regulations, shall file an application for a specific license authorizing the use of radioactive material or radiation producing machines in well logging in accordance with RH-403 and RH-404.

RH-7012. Reserved.

RH-7013. Specific Licenses for Irradiators.

The Department will approve an application for a specific license for the use of licensed material in an irradiator if the applicant meets the requirements contained in this Section.

a. The applicant shall satisfy the general requirements specified in RH-404 of these Regulations and the requirements contained in this Section.

b. The application must describe the training provided to irradiator operators including:

1. Classroom training;

2. On-the-job or simulator training;

3. Safety reviews;

4. Means employed by the applicant to test each operator's understanding of the Department's Regulations and licensing requirements and the irradiator operating and emergency procedures; and

5. Minimum training and experience of personnel who may provide training.

c. The application must include an outline of the written operating and emergency procedures listed in RH-7053 that describes the radiation safety aspects of the procedure.

RH-7013. (Cont'd)

d. The application must describe the organizational structure for managing the irradiator, specifically the radiation safety officer and those management personnel who have important radiation safety responsibilities or authorities. In particular, the application must specify who, within the management structure, has the authority to stop unsafe operations. The application must also describe the training and experience required for the position of radiation safety officer.

e. The application must include a description of the access control systems required by RH-7023, the radiation monitors required by RH-7029, the method of detecting leaking sources required by RH-7059 including the sensitivity of the method, and a diagram of the facility that shows the locations of all required interlocks and radiation monitors.

f. If the applicant intends to perform leak testing of dry-source-storage sealed sources, the applicant shall establish procedures for leak testing and submit a description of these procedures to the Department. The description must include the:

1. Instruments to be used;

2. Methods of performing the analysis; and

3. Pertinent experience of the individual who analyzes the samples.

g. If licensee personnel are to load or unload sources, the applicant shall describe the qualifications and training of the personnel and the procedures to be used. If the applicant intends to contract for source loading or unloading at its facility, the loading or unloading must be done by an organization specifically authorized by the Department, U.S. Nuclear Regulatory Commission, or an Agreement State to load or unload irradiator sources.

h. The applicant shall describe the inspection and maintenance checks, including the frequency of the checks required by RH-7061.

RH-7014. Reserved.

RH-7015. Start of Construction.

The applicant may not begin construction of a new irradiator prior to the submission to the Department of both an application for a license for the irradiator and the fee required. As used in this Section, the term "construction" includes the construction of any portion of the permanent irradiator structure on the site but does not include: Engineering and design work, purchase of a site, site surveys or soil testing, site preparations, site excavation, construction of warehouse or auxiliary structures, and other similar tasks. Any activities undertaken prior to the issuance of a license are entirely at the risk of the applicant and having no bearing on the issuance of a license with respect to the requirements of the Atomic Energy Act of 1954, as amended, and rules, regulations, and orders issued under the Act.

RH-7016. Reserved.

RH-7017. Applications for Exemptions.

a. The Department may, upon application of any interested person or upon its own initiative, grant any exemptions from the requirements in this Section that it determines are authorized by law and will not endanger life or property or the common defense and security and are otherwise in the public interest.

b. Any application for a license or for amendment of a license authorizing use of a teletherapy-type unit for irradiation of materials or objects may include proposed alternatives for the requirements of this Section. The Department will approve the proposed alternatives if the applicant provides adequate rationale for the proposed alternatives and demonstrates that they are likely to provide an adequate level of safety for workers and the public.

RH-7018. Reserved.

RH-7019. Request for Written Statements.

a. After the filing of the original application, the Department may request further information necessary to enable the Department to determine whether the application should be granted or denied.

b. Each license is issued with the condition that the licensee will, at any time before expiration of the license, upon the Department's request, submit written statements to enable the Department to determine whether the license should be modified, suspended, or revoked.

Part C.
DESIGN AND PERFORMANCE REQUIREMENTS FOR IRRADIATORS

RH-7020. Reserved.

RH-7021. Performance Criteria for Sealed Sources.

a. Requirements. Sealed sources installed after July 1, 1993:

1. Must have a certificate of registration issued by the U.S. Nuclear Regulatory Commission pursuant to 10 CFR 32.210 of 10 CFR Part 32;

2. Must be doubly encapsulated;

3. Must use radioactive material that is as nondispersible as practical and that is as insoluble as practical if the source is used in a wet-source-storage or wet-source-change irradiator;

4. Must be encapsulated in a material resistant to general corrosion, such 316L stainless steel or other material with equivalent resistance if the sources are for use in irradiator pools; and

5. In prototype testing of the sealed source, must have been leak tested and found leak-free after each of the tests described in RH-7021.b through RH-7021.g.

b. Temperature. The test source must be held at -40^{0}C for 20 minutes, 600^{0}C for one (1) hour, and then be subjected to a thermal shock test with a temperature drop from 600^{0}C to 20^{0}C within fifteen (15) seconds.

c. Pressure. The test source must be twice subjected for least five (5) minutes to an external pressure (absolute) of at 2 million newtons per square meter.

d. Impact. A 2-kilogram steel weight, 2.5 centimeters in diameter, must be dropped from a height of one (1) meter onto the test source.

e. Vibration. The test source must be subjected three (3) times for ten (10) minutes each to vibrations sweeping from 25 hertz to 500 hertz with a peak amplitude of five (5) times the acceleration of gravity. In addition, each test source must be vibrated for thirty (30) minutes at each resonant frequency found.

RH-7021. (Cont'd)

f. Puncture. A 50-gram weight and pin, 0.30-centimeter pin diameter, must be dropped from a height of one (1) meter onto the test source.

g. Bend. If the length of the source is more than fifteen (15) times larger than the minimum cross-sectional dimension, the test source must be subjected to a force of 2,000 newtons at its center equidistant from two (2) support cylinders, the distance between which is ten (10) times the minimum cross-sectional dimension of the source.

RH-7022. Reserved.

RH-7023. Access Control.

a. Each entrance to a radiation room at a panoramic irradiator must have a door or other physical barrier to prevent inadvertent entry of personnel if the sources are not in the shielded position. Product conveyor systems may serve as barriers as long as they reliably and consistently function as a barrier. It must not be possible to move the sources out of their shielded position if the door or barrier is open. Opening the door or barrier while the sources are exposed must cause the sources to return promptly to their shielded position. The personnel entrance door or barrier must have a lock that is operated by the same key used to move the sources. The doors and barriers must not prevent any individual in the radiation room from leaving.

b. In addition, each entrance to a radiation room at a panoramic irradiator must have an independent backup access control to detect personnel entry while the sources are exposed. Detection of entry while the sources are exposed must cause the sources to return to their fully shielded position and must also activate a visible and audible alarm to make the individual entering the room aware of the hazard. The alarm must also alert at least one other individual who is onsite of the entry. That individual shall be trained on how to respond to the alarm and prepared to promptly render or summon assistance.

c. A radiation monitor must be provided to detect the presence of high radiation levels in the radiation room of a panoramic irradiator before personnel entry. The monitor must be integrated with personnel access door locks to prevent room access when radiation levels are high. Attempted personnel entry while the monitor measures high radiation levels, must activate the alarm described in

RH-7023.b. The monitor may be located in the entrance (normally referred to as the maze) but not in the direct radiation beam.

d. Before the sources move from their shielded position in a panoramic irradiator, the source control must automatically activate conspicuous visible and audible alarms to alert people in the radiation room that the sources will be moved from their shielded position. The alarms must give individuals enough time to leave the room before the sources leave the shielded position.

e. Each radiation room at a panoramic irradiator must have a clearly visible and readily accessible control that would allow an individual in the room to make the sources return to their fully shielded position.

f. Each radiation room of a panoramic irradiator must contain a control that prevents the sources from moving from the shielded position unless the control has been activated and the door or barrier to the radiation room has been closed within a preset time after activation of the control.

g. Each entrance to the radiation room of a panoramic irradiator and each entrance to the area within the personnel access barrier of an underwater irradiator must have a sign bearing the radiation symbol and the words, **"Caution (or Danger) Radioactive Material"**. Panoramic irradiators must also have a sign stating **"High Radiation Area"**, but the sign may be removed, covered, or otherwise made inoperative when the sources are fully shielded.

h. If the radiation room of a panoramic irradiator has roof plugs or other movable shielding, it must not be possible to operate the irradiator unless the shielding is in its proper location. This requirement may be met by interlocks that prevent operation if shielding is not placed properly or by an operating procedure requiring inspection of shielding before operating.

i. Underwater irradiators must have a personnel access barrier around the pool which must be locked to prevent access when the irradiator is not attended. Only operators and facility management may have access to keys to the personnel access barrier. There must be an intrusion alarm to detect unauthorized entry when the personnel access barrier is locked. Activation of the intrusion alarm must alert an individual (not necessarily onsite) who is prepared to respond or summon assistance.

RH-7024. Reserved.

RH-7025. Shielding.

a. The radiation dose rate in areas that are normally occupied during operation of a panoramic irradiator may not exceed 0.02 millisievert (2 millirems) per hour at any location 30 centimeters or more from the wall of the room when the sources are exposed. The dose rate must be averaged over an area not to exceed 100 square centimeters having no linear dimension greater than 20 centimeters. Areas where the radiation dose rate exceeds 0.02 millisievert (2 millirems) per hour must be locked, roped off, or posted.

b. The radiation dose at 30 centimeters over the edge of the pool of a pool irradiator may not exceed 0.02 millisievert (2 millirems) per hour when the sources are in fully shielded position.

c. The radiation dose rate at one (1) meter from the shield of a dry-source-storage panoramic irradiator when the source is shielded may not exceed 0.02 millisievert (2 millirems) per hour and at 5 centimeters from the shield must not exceed 0.02 millisievert (20 millirems) per hour.

RH-7026. Reserved.

RH-7027. Fire Protection.

a. The radiation room at a panoramic irradiator must have heat and smoke detectors. The detectors must activate an audible alarm. The alarm must be capable of alerting a person who is prepared to summon assistance promptly. The sources must automatically become fully shielded if a fire is detected.

b. The radiation room at a panoramic irradiator must be equipped with a fire extinguishing system capable of extinguishing a fire without the entry of personnel into the room. The system for the radiation room must have a shut-off valve to control flooding into unrestricted areas.

RH-7028. Reserved.

RH-7029. Radiation Monitors.

a. Irradiators with automatic product conveyor systems must have a radiation monitor with an audible alarm located to detect loose radioactive sources that are carried toward the product exit. If the monitor detects a source, an alarm must sound and product conveyors must stop automatically. The alarm must be capable of alerting an individual in the facility who is prepared to summon assistance. Underwater irradiators in which the product moves within an enclosed stationary tube are exempt from the requirements of this paragraph.

b. Underwater irradiators that are not in a shielded radiation room must have a radiation monitor over the pool to detect abnormal radiation levels. The monitor must have an audible alarm and a visible indicator at entrances to the personnel access barrier around the pool. The audible alarm may have a manual shut-off. The alarm must be capable of alerting an individual who is prepared to respond promptly.

RH-7030. Reserved.

RH-7031. Control of Source Movement.

a. The mechanism that moves the sources of a panoramic irradiator must require a key to actuate. Actuation of the mechanism must cause an audible signal to indicate that the sources are leaving the shielded position. Only one key may be in use at any time, and only operators or facility management may possess it. The key must be attached to a portable radiation survey meter by a chain or cable. The lock for source control must be designed so that the key may not be removed if the sources are in an unshielded position. The door to the radiation room must require the same key.

b. The console of a panoramic irradiator must have a source position indicator that indicates when the sources are in the fully shielded position, when they are in transit, and when the sources are exposed.

c. The control console of a panoramic irradiator must have a control that promptly returns the sources to the shielded position.

d. Each control for a panoramic irradiator must be clearly marked as to its function.

RH-7032. Reserved.

RH-7033. Irradiator Pools.

a. For licenses initially issued after July 1, 1993, irradiator pools must either:

1. Have a water-tight stainless steel liner or a liner metallurgically compatible with other components in the pool; or

2. Be constructed so that there is a low likelihood of substantial leakage and have a surface designed to facilitate decontamination.

In either case, the licensee shall have a method to safely store the sources during repairs of the pool.

b. For licenses initially issued after July 1, 1993, irradiator pools must have no outlets more than 0.5 meter below the normal low water level that could allow water to drain out of the pool. Pipes that have intakes more than 0.5 meter below the normal low water level and that could act as siphons must have siphons breakers to prevent the siphoning of pool water.

c. A means must be provided to replenish water losses from the pool.

d. A visible indicator must be provided in a clearly visible location to indicate if the pool water level is below the normal low water level or above the normal high water level.

e. Irradiator pools must be equipped with a purification system designed to be capable of maintaining the water during normal operation at a conductivity of 20 microsiemens per centimeter or less and with a clarity so that the sources can be seen clearly.

f. A physical barrier, such as a railing or cover, must be used around or over irradiator pools during normal operation to prevent personnel from accidentally falling into the pool. The barrier may be removed during maintenance, inspection, and service operations.

g. If long-handled tools or poles are used in irradiator pools, the radiation dose rate on the handling areas of the tools may not exceed 0.02 millisievert (2 millirems) per hour.

RH-7034. Reserved.

RH-7035. Source Rack Protection.

If the product to be irradiated moves on a product conveyor system, the source rack and the mechanism that moves the rack must be protected by a barrier or guides to prevent products and product carriers from hitting or touching the rack or mechanism.

RH-7036. Reserved.

RH-7037. Power Failures.

a. If electrical power at a panoramic irradiator is lost for longer than ten (10) seconds, the sources must automatically return to the shielded position.

b. The lock on the door of the radiation room of a panoramic irradiator may not be deactivated by power failure.

c. During a power failure, the area of any irradiator where sources are located may be entered only when using an operable and calibrated radiation survey meter.

RH-7038. Reserved.

RH-7039. Design Requirements.

Irradiators whose construction begins after July 1, 1993, must meet the design requirements of this Section.

a. Shielding. For panoramic irradiators, the licensee shall design shielding walls to meet generally accepted building code requirements for reinforced concrete and design the walls, wall penetrations, and entrance ways to meet the radiation shielding requirements of RH-7025. If the irradiator will use more than 2×10^{17} becquerels (5 million curies) of activity, the licensee shall evaluate the effects of heating of the shielding walls by the irradiator sources.

b. Foundations. For panoramic irradiators, the licensee shall design the foundation, with consideration given to soil characteristics, to ensure it is adequate to support the weight of the facility shield walls.

RH-7039. (Cont'd)

c. Pool integrity. For pool irradiators, the licensee shall design the pool to assure that it is leak resistant, that it is strong enough to bear the weight of the pool water and shipping casks, that a dropped cask would not fall on sealed sources, that all outlets or pipes meet the requirements of RH-7033.b, and that metal components are metallurgically compatible with other components in the pool.

d. Water handling system. For pool irradiators, the licensee shall verify that the design of the water purification system is adequate to meet the requirements of RH-7033.e, the system must be designed so that water leaking from the system does not drain to unrestricted areas without being monitored.

e. Radiation monitors. For all irradiators, the licensee shall evaluate the location and sensitivity of the monitor to detect sources carried by the product conveyor system as required by RH-7029.a. The licensee shall verify that the product conveyor is designed to stop before a source on the product conveyor would cause a radiation overexposure to any person. For pool irradiators, if the licensee uses radiation monitors to detect contamination under RH-7059.b, the licensee shall verify that the design of radiation monitoring systems to detect pool contamination includes sensitive detectors located close to where contamination is likely to concentrate.

f. Source rack. For pool irradiators, the licensee shall verify that there are no crevices on the source or between the source and source holder that would promote corrosion on a critical area of the source. For panoramic irradiators, the licensee shall determine that source rack drops due to loss of power will not damage the source rack and that source rack drops due to failure of cables (or alternate means of support) will not cause loss of integrity of sealed sources. For panoramic irradiators, the licensee shall review the design of the mechanism that moves the sources to assure that the likelihood of a stuck source is low and that, if the rack sticks, a means exists to free it with minimal risk to personnel.

g. Access control. For panoramic irradiators, the licensee shall verify from the design and logic diagram that the access control system will meet the requirements of RH-7023.

RH-7039. (Cont'd)

h. Fire protection. For panoramic irradiators, the licensee shall verify that the number, location, and spacing of the smoke and heat detectors are appropriate to detect fires and that the detectors are protected from mechanical and radiation damage. The licensee shall verify that the design of the fire extinguishing system provides the necessary discharge patterns, densities, and flow characteristics for complete coverage of the radiation room and that the system is protected from mechanical and radiation damage.

i. Source return. For panoramic irradiators, the licensee shall verify that the source rack will automatically return to the fully shielded position if offsite power is lost for more than ten (10) seconds.

j. Seismic. For panoramic irradiators to be built in seismic areas, the licensee shall design the reinforced concrete radiation shields to retain their integrity in the event of an earthquake by designing to the seismic requirements of an appropriate source such as American Concrete Institute Standard ACI 318-89, "Building Code Requirements for Reinforced Concrete," Chapter 21, "Special Provisions for Seismic Design," or local building codes, if current.

k. Wiring. For panoramic irradiators, the licensee shall verify that electrical wiring and electrical equipment in the radiation room are selected to minimize failures due to prolonged exposure to radiation.

RH-7040. Reserved.

RH-7041. Construction Monitoring and Acceptance Testing.

These requirements must be met for irradiators whose construction begins after July 1, 1993. The requirements must be met prior to loading sources.

a. Shielding. For panoramic irradiators, the licensee shall monitor the construction of the shielding to verify that its construction meets design specifications and generally accepted building code requirements for reinforced concrete.

b. Foundations. For panoramic irradiators, the licensee shall monitor the construction of the foundations to verify that their construction meets design specifications.

RH-7041. (Cont'd)

c. Pool integrity. For pool irradiators, the licensee shall verify that the pool meets design specifications and shall test the integrity of the pool. The licensee shall verify that outlets and pipes meet the requirements of RH-7033.b.

d. Water handling system. For pool irradiators, the licensee shall verify that the water purification system, the conductivity meter, and the water level indicators operate properly.

e. Radiation monitors. For all irradiators, the licensee shall verify the proper operation of the monitor to detect sources carried on the product conveyor system and the related alarms and interlocks required by RH-7029.a. For pool irradiators, the licensee shall verify the proper operation of the radiation monitors and the related alarm if used to meet RH-7059.b. For underwater irradiators, the licensee shall verify the proper operation of the over-the-pool monitor, alarms, and interlocks required by RH-7029.b.

f. Source rack. For panoramic irradiators, the licensee shall test the movement of the source racks for proper operation prior to source loading; testing must include source rack lowering due to simulated loss of power. For all irradiators with product conveyor systems, the licensee shall observe and test the operation of the conveyor system to assure that the requirements in RH-7035 are met for protection of the source rack and the mechanism that moves the rack; testing must include tests of any limit switches and interlocks used to protect the source rack and mechanism that moves the rack from moving product carriers.

g. Access control. For panoramic irradiators, the licensee shall test the completed access control system to assure that it functions as designed and that all alarms, controls, and interlocks work properly.

h. Fire protection. For panoramic irradiators, the licensee shall test the ability of the heat and smoke detectors to detect a fire, to activate alarms, and to cause the source rack to automatically become fully shielded. The licensee shall test the operability of the fire extinguishing system.

i. Source return. For panoramic irradiators, the licensee shall demonstrate that the source racks can be returned to their fully shielded positions without offsite power.

RH-7041. (Cont'd)

j. Computer systems. For panoramic irradiators that use a computer system to control the access control system, the licensee shall verify that the access control system will operate properly if offsite power is lost and shall verify that the computer has security features that prevent an irradiator operator from commanding the computer to override the access control system when it is required to be operable.

k. Wiring. For panoramic irradiators, the licensee shall verify that the electrical wiring and electrical equipment that were installed meet the design specifications.

RH-7042.
RH-7050. Reserved.

PART D.
OPERATION OF IRRADIATORS

RH-7051. Training.

a. Before an individual is permitted to operate an irradiator without a supervisor present, the individual must be instructed in:

1. The fundamentals of radiation protection applied to irradiators (including the differences between external radiation and radioactive contamination, units of radiation dose, Department dose limits, why large radiation doses must be avoided, how shielding and access controls prevent large doses, how an irradiator is designed to prevent contamination, the proper use of survey meters and personnel dosimeters, other radiation safety features of an irradiator, and the basic function of the irradiator);

2. The requirements of Section 3 of these Regulations that are relevant to the irradiator;

3. The operation of the irradiator;

4. Those operating and emergency procedures listed in RH-7053 that the individual is responsible for performing; and

5. Case histories of accidents or problems involving irradiators.

b. Before an individual is permitted to operate an irradiator without a supervisor present, the individual shall pass a written test on the instruction received consisting primarily of questions based on the licensee's operating and emergency procedures that the individual is responsible for performing and other operations necessary to safely operate the irradiator without supervision.

c. Before an individual is permitted to operate an irradiator without a supervisor present, the individual must have received on-the-job training or simulator training in the use of the irradiator as described in the license application. The individual shall also demonstrate the ability to perform those portions of the operating and emergency procedures that he or she is to perform.

d. The licensee shall conduct safety reviews for irradiator operators at least annually. The licensee shall give each operator a brief written test on the information. Each safety review must include, to the extent appropriate, each of the following:

RH-7051. (Cont'd)

1. Changes in operating and emergency procedures since the last review, if any;

2. Changes in regulations and license conditions since the last review, if any;

3. Reports on recent accidents, mistakes, or problems that have occurred at irradiators, if any;

4. Relevant results of inspections of operator safety performance;

5. Relevant results of the facility's inspection and maintenance checks; and

6. A drill to practice an emergency or abnormal event procedure.

e. The licensee shall evaluate the safety performance of each irradiator operator at least annually to ensure that Regulations, license conditions, and operating and emergency procedures are followed. The licensee shall discuss the results of the evaluation with the operator and shall instruct the operator on how to correct any mistakes or deficiencies observed.

f. Individuals who will be permitted unescorted access to the radiation room of the irradiator or the area around the pool of an underwater irradiator, but who have not received the training required for operators and the radiation safety officer, shall be instructed and tested in any precautions they should take to avoid radiation exposure, any procedures or parts of procedures listed in RH-7053 that they are expected to perform or comply with, and their proper response to alarms required in this Section. Tests may be oral.

g. Individuals who must be prepared to respond to alarms required by RH-7023.b, RH-7023.i, RH-7027.a, RH-7029.a, RH-7029.b, and RH-7059.b shall be trained and tested on how to respond. Each individual shall be retested at least once a year. Tests may be oral.

RH-7052. Reserved.

RH-7053. Operating and Emergency Procedures.

a. The licensee shall have and follow written operating procedures for:

1. Operation of the irradiator, including entering and leaving the radiation room;

2. Use of personnel dosimeters;

3. Surveying the shielding of panoramic irradiators;

4. Monitoring pool water for contamination while the water is in the pool and before release of pool water to unrestricted areas;

5. Leak testing of sources;

6. Inspection and maintenance checks required by RH-7061;

7. Loading, unloading, and repositioning sources, if the operations will be performed by the licensee; and

8. Inspection of movable shielding required by RH-7023.h, if applicable.

b. The licensee shall have and follow emergency or abnormal event procedures, appropriate for the irradiator type, for:

1. Sources stuck in the unshielded position;

2. Personnel overexposures;

3. A radiation alarm from the product exit portal monitor or pool monitor;

4. Detection of leaking sources, pool contamination, or alarm caused by contamination of pool water;

5. A low or high water level indicator, an abnormal water loss, or leakage from the source storage pool;

6. A prolonged loss of electrical power;

7. A fire alarm or explosion in the radiation room;

8. An alarm indicating unauthorized entry into the radiation room, area around pool, or another alarm area;

RH-7053. (Cont'd)

9. Natural phenomena, including an earthquake, a tornado, flooding, or other phenomena as appropriate for the geographical location of the facility; and

10. The jamming of automatic conveyor systems.

c. The licensee may revise operating and emergency procedures without Department approval only if all of the following conditions are met:

1. The revisions do not reduce the safety of the facility;

2. The revisions are consistent with the outline or summary of procedures submitted with the license application;

3. The revisions have been reviewed and approved by the radiation safety officer; and

4. The users or operators are instructed and tested on the revised procedures before they are put into use.

RH-7054. Reserved.

RH-7055. Personnel Monitoring.

a. Irradiator operators shall wear either a film badge or a thermoluminescent dosimeter (TLD) while operating a panoramic irradiator or while in the area around the pool of an underwater irradiator. The film badge or TLD processor must be accredited by the National Voluntary Laboratory Accreditation Program for high energy photons in the normal and accident dose ranges (See RH-1301.a). Each film badge or TLD must be assigned to and worn by only one individual. Film badges must be processed at least monthly, and TLDs must be processed at least quarterly.

b. Other individuals who enter the radiation room of a panoramic irradiator shall wear a dosimeter, which may be a pocket dosimeter. For groups of visitors, only two people who enter the radiation room are required to wear dosimeters. If pocket dosimeters are used to meet the requirements of this paragraph, a check of their response to radiation must be done at least annually. Acceptable dosimeters must read within plus or minus thirty (±30%) percent

(± 30%) of the true radiation dose.

RH-7056. Reserved.

RH-7057. Radiation Surveys.

a. A radiation survey of the area outside the shielding of the radiation room of a panoramic irradiator must be conducted with the sources in the exposed position before the facility starts to operate. A radiation survey of the area above the pool of pool irradiators must be conducted after the sources are loaded but before the facility starts to operate. Additional radiation surveys of the shielding must be performed at intervals not to exceed three (3) years and before resuming operation after addition of new sources or any modification to the radiation room shielding or structure that might increase dose rates.

b. If the radiation levels specified in RH-7025 are exceeded, the facility must be modified to comply with the requirements in RH-7025.

c. Portable radiation survey meters must be calibrated at least annually to an accuracy of plus or minus 20 percent (± 20%) for the gamma energy of the sources in use. The calibration must be done at two points on each scale or, for digital instruments, at one point per decade over the range that will be used. Portable radiation survey meters must be of a type that does not saturate and read zero at high radiation dose rates.

d. Water from the irradiator pool, other potentially contaminated liquids, and sediments from pool vacuuming must be monitored for radioactive contamination before release to unrestricted areas. Radioactive concentrations must not exceed those specified in Section 3 of these Regulations, Table 2, Column 2 or Table 3 of Appendix G, "Annual Limits on Intake (ALIs) and Derived Air Concentrations (DACs) of Radionuclides for Occupational Exposure; Effluent Concentrations; Concentrations for Release to Sewerage".

e. Before releasing resins for unrestricted use, they must be monitored before release in an area with a background level less than 0.05 millirem (0.5 microsievert) per hour. The resins may be released only if the survey does not detect radiation levels above background radiation levels. The survey meter used must be capable of detecting radiation levels of 0.05 millirem (0.5 microsievert) per hour.

RH-7058. Reserved.

RH-7059. Detection of Leaking Sources.

a. Each dry-source-storage sealed source must be tested for leakage at intervals not to exceed six (6) months using a leak test kit or method approved by the Department, U.S. Nuclear Regulatory Commission, or an Agreement State. In the absence of a certificate from a transferor that a test has been made within the six (6) months before the transfer, the sealed source may not be used until tested. The test must be capable of detecting the presence of 200 becquerels (0.005 microcurie) of radioactive material and must be performed by a person approved by the Department, U.S. Nuclear Regulatory Commission, or an Agreement State to perform the test.

b. For pool irradiators, sources may not be put into the pool unless the licensee tests the sources for leaks or has a certificate from a transferor that a leak test has been done within six (6) months before the transfer. Water from the pool must be checked for contamination each day the irradiator operates. The check may be done either by using a radiation monitor on a pool water circulating system or by analysis of a sample of pool water. If a check for contamination is done by analysis of a sample of pool water, the results of the analysis must be available within twenty-four (24) hours. If the licensee uses a radiation monitor on a pool water circulating system, the detection of above normal radiation levels must activate an alarm. The alarm set-point must be set as low as practical, but high enough to avoid false alarms. The licensee may reset the alarm set-point to a higher level if necessary to operate the pool water purification system to clean up contamination in the pool if specifically provided for in written emergency procedures.

c. If a leaking source is detected, the licensee shall arrange to remove the leaking source from service and have it decontaminated, repaired, or disposed of by a Department, U.S. Nuclear Regulatory Commission, or Agreement State licensee that is authorized to perform these functions. The licensee shall promptly check its personnel, equipment, facilities, and irradiated product for radioactive contamination. No product may be shipped until the product has been checked and found free of contamination. If a product has been shipped that may have been inadvertently contaminated, the licensee shall arrange to locate and survey that product for contamination. If any personnel are found to be contaminated, decontamination must be performed promptly. If contaminated equipment, facilities, or products are found, the licensee shall arrange to have them decontaminated or disposed of by a Department,

RH-7059. (Cont'd)

U.S. Nuclear Regulatory Commission, or Agreement State licensee that is authorized to perform these functions. If a pool is contaminated, the licensee shall arrange to clean the pool until the contamination levels do not exceed the appropriate concentration in Section 3 of these Regulations, Table 2, Column 2, Appendix G. **(See RH-1502.e through RH-1502.g for reporting requirements.)**

RH-7060. Reserved.

RH-7061. Inspection and Maintenance.

a. The licensee shall perform inspection and maintenance checks that include, as a minimum, each of the following at the frequency specified in the license or license application:

1. Operability of each aspect of the access control system required by RH-7023.

2. Functioning of the source position indicator required by RH-7031.b.

3. Operability of the radiation monitor for radioactive contamination in pool water required by RH-7059.b using a radiation check source, if applicable.

4. Operability of the over-pool radiation monitor at underwater irradiators as required by RH-7029.b.

5. Operability of the product exit monitor required by RH-7029.a.

6. Operability of the emergency source return control required by RH-7031.c.

7. Leak-tightness of systems through which pool water circulates (visual inspection).

8. Operability of the heat and smoke detectors and extinguisher system required by RH-7027 (but without turning extinguishers on).

9. Operability of the means of pool water replenishment required by RH-7033.c.

10. Operability of the indicators of high and low pool water levels required by RH-7033.d.

RH-7061. (Cont'd)

11. Operability of the intrusion alarm required by RH-7023.i, if applicable.

12. Functioning and wear of the system, mechanisms, and cables used to raise and lower sources.

13. Condition of the barrier to prevent products from hitting the sources or source mechanism as required by RH-7035.

14. Amount of water added to the pool to determine if the pool is leaking.

15. Electrical wiring on required safety systems for radiation damage.

16. Pool water conductivity measurements and analysis as required by RH-7063.b.

b. Malfunctions and defects found during inspection and maintenance checks must be repaired without undue delay.

RH-7062. Reserved.

RH-7063. Pool Water Purity.

a. Pool water purification system must be run sufficiently to maintain the conductivity of the pool water below 20 microsiemens per centimeter under norm circumstances. If pool water conductivity rises above 20 microsiemens per centimeter, the licensee shall take prompt actions to lower the pool water conductivity and shall take corrective actions to prevent future recurrences.

b. The licensee shall measure the pool water conductivity frequently enough, but no less than weekly, to assure that the conductivity remains below 20 microsiemens per centimeter. Conductivity meters must be calibrated at least annually.

RH-7064. Reserved.

RH-7065. Attendance During Operation.

a. Both an irradiator operator and at least one other individual, who is trained on how to respond and prepared to promptly render or summon assistance if the access control alarm sounds, shall be present onsite:

1. Whenever the irradiator is operated using an automatic product conveyor system; and

2. Whenever the product is moved into or out of the radiation room when the irradiator is operated in a batch mode.

b. At a panoramic irradiator at which static irradiations (no movement of the product) are occurring, a person who has received the training on how to respond to alarms described in RH-7051.g must be onsite.

c. At an underwater irradiator, an irradiator operator must be present at the facility whenever the product is moved into or out of the pool. Individuals who move the product into or out of the pool of an underwater irradiator need not be qualified as irradiator operators; however, they must have received the training described in RH-7051.f and RH-7051.g. Static irradiations may be performed without a person present at the facility.

RH-7066. Reserved.

RH-7067. Entering and Leaving the Radiation Room.

a. Upon first entering the radiation room of a panoramic irradiator after an irradiation, the irradiator operator shall use a survey meter to determine that the source has returned to its fully shielded position. The operator shall check the functioning of the survey meter with a radiation check source prior to entry.

b. Before exiting from and locking the door to the radiation room of a panoramic irradiator prior to a planned irradiation, the irradiator operator shall:

1. Visually inspect the entire radiation room to verify that no one else is in it; and

RH-7067. (Cont'd)

2. Activate a control in the radiation room that permits the sources to be moved from the shielded position only if the door to the radiation room is locked within a preset time after setting the control.

c. During a power failure, the area around the pool of an under- water irradiator may not be entered without using an operable and calibrated radiation survey meter unless the over-the-pool monitor required by RH-7029.b is operating with backup power.

RH-7068. Reserved.

RH-7069. Irradiation of Explosive or Flammable Materials.

a. Irradiation of explosive material is prohibited unless the licensee has received prior written authorization from the Department. Authorization will not be granted unless the licensee can demonstrate that detonation of the explosive would not rupture the sealed sources, injure personnel, damage safety systems, or cause radiation overexposures of personnel.

b. Irradiation of more than small quantities of flammable material (flash point below 140° F) is prohibited in panoramic irradiators unless the licensee has received prior written authorization from the Department. Authorization will not be granted unless the licensee can demonstrate that a fire in the radiation room could be controlled without damage to sealed sources or safety systems and without radiation overexposures of personnel.

RH-7070.-
RH-7079. Reserved.

PART E.
RECORDS

RH-7080. Reserved.

RH-7081. Records and Retention Periods.

The licensee shall maintain the following records at the irradiator for the periods specified.

a. A copy of the license, license conditions, documents incorporated into a license by reference, and amendments thereto until superseded by new documents or until the Department terminates the license for documents not superseded.

b. Records of each individual's training, tests, and safety reviews provided to meet the requirements of RH-7051.a through RH-7051.d, RH-7051.f and RH-7051.g until three (3) years after the individual terminates work.

c. Records of the annual evaluations of the safety performance or irradiator operators required by RH-7051.e for three (3) years after the evaluation.

d. A copy of the current operating and emergency procedures required by RH-7053 until superseded or the Department terminates the license. Records of the radiation safety officer's review and approval of changes in procedures as required by RH-7053.c.3 retained for three (3) years from the date of the change.

e. Film badge and TLD results required by RH-7055 until the Department terminates the license.

f. Records of radiation surveys required by RH-7057 for three (3) years from the date of the survey.

g. Records of radiation survey meter calibrations required by RH-7057 and pool water conductivity meter calibrations required by RH-7063.b until three (3) years from the date of calibration.

h. Records of the results of leak tests required by RH-7059.a and the results of contamination checks required by RH-7059.b for three (3) years from the date of each test.

i. Records of inspection and maintenance checks required by RH-7061 for three (3) years.

RH-7081. (Cont'd)

j. Records of major malfunctions, significant defects, operating difficulties or irregularities, and major operating problems that involve required radiation safety equipment for three (3) years after repairs are completed.

k. Records of the receipt, transfer and disposal, of all licensed sealed sources as required by Part E and RH-600 of Section 2 of these Regulations.

l. Records on the design checks required by RH-7039 and the construction control checks as required by RH-7041 until the license is terminated. The records must be signed and dated. The title or qualification of the person signing must be included.

m. Records related to decommissioning of the irradiator as required by RH-409.h.

RH-7082. Reserved.

RH-7083. Reports.

a. In addition to the reporting requirements in other Parts of these Regulations, the licensee shall report the following events if not reported under other parts of the Department Regulations:

1. Source stuck in an unshielded position.

2. Any fire or explosion in a radiation room.

3. Damage to the source racks.

4. Failure of the cable or drive mechanism used to move the source racks.

5. Inoperability of the access control system.

6. Detection of radiation source by the product exit monitor.

7. Detention of radioactive contamination attributable to licensed radioactive material.

8. Structural damage to the pool liner or walls.

9. Abnormal water loss or leakage from the source storage pool.

RH-7083. (Cont'd)

10. Pool water conductivity exceeding 100 microsiemens per centimeter.

b. The report must include a telephone report within twenty-four (24) hours as described in RH-1502.g.1, and a written report within thirty (30) days as described in RH-1502.g.2.

RH-7084.
RH-7090. Reserved.

PART F.
ENFORCEMENT

RH-7091. Violations.

a. Any person who violates any of the provisions of the Act or rules, Regulations or orders in effect pursuant thereto of the Department shall, upon conviction thereof, be punished by a fine of not less than one hundred dollars ($100.00) nor more than two thousand dollars ($2,000.00) or by imprisonment for not more than six (6) months or be both so fined and imprisoned.

b. Impounding. Sources of radiation shall be subject to impounding pursuant to Section 5 of these Regulations.

RH-7092.-
RH-7999. Reserved.

SECTION 9.
USE OF RADIONUCLIDES IN THE HEALING ARTS

PART A. GENERAL

RH-8000. Purpose and Scope.

This Section establishes additional requirements and provisions for the specific use of radionuclides in the healing arts. These requirements and provisions provide for the protection of the public health and safety. The requirements and provisions of this Section are in addition to, and not in substitution for, others in these regulations. The requirements and provisions of these regulations apply to applicants and licensees subject to this Section unless specifically exempted.

RH-8001.-
RH-8200. Reserved

PART B. Additional Requirements

RH-8201. Visiting Authorized User.

a. A licensee may permit any visiting authorized user to use licensed material for medical use under the terms of the licensee's license for a period not to exceed sixty (60) days in any calendar year if:

1. The visiting authorized user has the prior written permission of the licensee's management and, if the use occurs on behalf of an institution, the institute's Radiation Safety Committee and

2. The licensee has a copy of an Agreement State or U.S. Nuclear Regulatory Commission license that identifies the visiting authorized user by name as an authorized user of medical use and only those procedures for which the visiting authorized user is licensed for are performed.

b. A licensee shall retain copies of the records specified in RH-8201 for five (5) years from the date of the last visit.

RH-8202.-
RH-8300. Reserved

PART C.
Specific Requirements

RH-8301. Possession, Use, Calibration, and Check of Dose Calibrators.

a. A licensee shall possess and use a dose calibrator to measure the activity of dosages of radiopharmaceuticals prior to administration to each patient.

b. A licensee shall:

1. Check each dose calibrator for constancy with a dedicated check source at the beginning of each day of use. To satisfy the requirement of this paragraph, the check must be done on a frequently used setting with a sealed source of not less than 10 microcuries of radium-226 or 50 microcuries of any other photon-emitting radionuclide with a half-life greater than ninety (90) days;

2. Test each dose calibrator for accuracy upon installation and at least annually thereafter by assaying at least two (2) sealed sources containing different radionuclides whose activity the manufacturer has determined within five (5) percent of its stated activity, whose activity is at least 10 microcuries for radium-226 and 50 microcuries for any other photon-emitting radionuclide, and at least one of which has a principal photon energy between 100 keV and 500 keV. A licensee shall retain a record of each check and test required by this Section for three (3) years unless directed otherwise. The records required in this section must include: the model and serial number of the dose calibrator, the model and serial number of each source used, the identity of the radionuclide contained in the source and its activity, the date of the test, the results of the test, and the identity of the individual performing the test.

3. Test each dose calibrator for linearity upon installation and at least quarterly thereafter over a range of use from 10 microcuries and the highest dosage that will be administered to a patient; and

4. Test each dose calibrator for geometry dependence upon installation over the range of volumes and volume configurations for which it will be used. The licensee shall keep a record of this test for the duration of the use of the dose calibrator. A licensee shall also perform appropriate checks and tests required by this section following adjustment or repair of the dose calibrator.

5. A licensee shall mathematically correct dosage readings for any geometry or linearity error that exceeds five (5) percent if the dosage is greater than 10 microcuries and shall repair or replace the dose calibrator if the accuracy or constancy error exceeds ten (10) percent.

c. A licensee shall retain a record of each check and test required by this section for three (3) years unless directed otherwise. The records required in this section must include: the model and serial number of the dose calibrator, the configuration of the source measured, the activity measured for each volume measured, the date of the test, and the identity of the individual performing the test.

RH-8302. Measurement of Dosages of Radiopharmaceuticals For Medical Use.

A licensee shall:

a. Measure the activity of each dosage of a photon-emitting radionuclide prior to medical use.

b. Measure, by direct measurement or by combination of measurements and calculations, the activity of each dosage of an alpha- or a beta-emitting radionuclide prior to medical use, except for unit dosages obtained from a manufacturer or preparer licensed pursuant to RH-405.1.

c. Retain a record of the measurements required by RH-8302 for three (3) years. To satisfy this requirement, the record must contain the:

1. Generic name, trade name, or abbreviation of the radiopharmaceutical, its lot number, and expiration dates and the radionuclide;

RH-8302. (Cont'd)

2. Patient's or human research subject's name and identification number if one has been assigned;

3. Prescribed dosage and activity of the dosage at the time of measurement;

4. Date and time of the measurement; and

5. Initials of the individual who made the record.

RH-8303. Permissible Molybdenum-99 Concentration.

a. A licensee shall not administer a radiopharmaceutical containing more than 0.15 microcurie of molybdenum-99 per millicuries of technetium-99m (0.15 kilobecquerel of molybdenum-99 per megabecquerels of technetium-99).

b. A licensee preparing technetium-99m radiopharmaceuticals from molybdenum-99/ technetium-99 generators shall measure the molybdenum-99 concentration in each elute or extract.

c. A licensee who must measure molybdenum concentration shall retain a record of each measurement for three (3) years. The record shall include, for each elution or extraction of technetium-99m, the measured activity of the technetium expressed in millicuries megabecquerels), (the measured activity of molybdenum expressed in microcuries (kilobecquerels), the ratio of the measures expressed as microcuries of molybdenum per millicurie of technetium (kilobecquerels of molybdenum per megabecquerel of technetium), the date of the test, and the initials of the individual who performed the test.

d. A licensee shall report immediately to the Department each occurrence of molybdenum-99 concentration exceeding the limits specified in RH-8302.

PART D.
Specific Requirements For The Use of Radiopharmaceuticals For Therapy

RH-8304. Safety Instructions for Hospitalized Radiopharmaceutical Patient Caregivers.

a. A licensee shall provide radiation safety instructions for all personnel caring for the patient receiving radiopharmaceutical therapy and hospitalized. Refresher training shall be provided at intervals not to exceed one (1) year. To satisfy this requirement, the instructions must describe the licensee's procedures for:

1. Patient control;

2. Visitor control;

3. Contamination control;

4. Waste control; and

5. Notification of the Radiation Safety Officer in case of the patient's death or medical emergency.

b. A licensee shall keep for three (3) years a list of individuals receiving instruction, a description of the instruction, the date of instruction, and the name of the individual who gave the instruction.

RH-8305.
RH-8400. Reserved.

PART E.
Specific Requirements For The Use of Sources For Brachytherapy

RH-8401. Use of Sources of Brachytherapy.

A licensee shall use brachytherapy sources in accordance with the manufacturer's radiation safety and handling instructions.

RH-8402. Release of Patients Treated With Temporary Implants.

a. Immediately after removing the last temporary implant source from a patient, the licensee shall make a radiation survey of the patient or the human research subject with a radiation detection survey instrument to confirm that all sources have been removed. The licensee may not release from confinement for medical care a patient treated by temporary implant until all sources have been removed.

b. A licensee shall retain a record of patient surveys for three (3) years. Each record must include the date of the survey, the name of the patient, the dose rate from the patient expressed as millirem per hour and measured at one (1) meter from the patient, the survey instrument used, and the initials of the individual who made the survey.

SEVERABILITY

If any provisions of these Rules and Regulations or the application thereof to any person or circumstance is held invalid, such invalidity shall not affect other provisions or applications of these Rules and Regulations which can give effect without the invalid provisions or applications. To this end, the provisions hereto are declared to be severable.

REPEAL

All Regulations and parts of Regulations in conflict herewith are hereby repealed.

CERTIFICATION

This will certify that the foregoing amendment to the Rules and Regulations for Control of Sources of Ionizing Radiation was adopted by the Arkansas State Board of Health at regular executive session of said Board held in:

Little Rock, Arkansas, on the twenty-eight day of October, 1993; and Heber Springs, Arkansas on the twenty-fifth day of July, 1996; and Little Rock, Arkansas on the twenty-sixth day of July, 2001.

Fay Boozman, M.D.
Secretary, Arkansas State Board of Health
Director, Arkansas Department of Health

The foregoing Rules and Regulations, having been filed in my office, are hereby in compliance with the Administrative Procedures Act on this 10th day of June, 2002

Mike Huckabee
Governor of the State of Arkansas